PROJECT	DESIGNATION
IM-65-6(063)	9802780 (ROAD PLANS)
CONTRACT	0300233 (SIGNING AND SIGNAL PLANS)
IR-29162	

INDIANA
DEPARTMENT OF
TRANSPORTATION

ROAD PLANS

RP 171+97

PROJECT NO. IM-65-6(063) C.N.
PROJECT NO. IM-65-6(063) P.E.
PROJECT NO. IM-65-6(063) R/W

TRAFFIC DATA	S.R. 26	RAMPS	I-65
A.A.D.T. (2007)	61,230 V.P.D.	13,540 V.P.D. (MAX.)	58,910 V.P.D.
A.A.D.T. (2017)	73,830 V.P.D.	16,320 V.P.D. (MAX.)	71,010 V.P.D.
D.H.V. (2017)	7,380 V.P.H.	1,140 V.P.H.	3,550 V.P.H.
DIRECTIONAL DISTRIBUTION	53% W.B.	100%	50%
TRUCKS	11% A.A.D.T.	15% A.A.D.T.	30% A.A.D.T.
DESIGN DATA			
DESIGN SPEED	45 M.P.H.	50 M.P.H.	70 M.P.H.
PROJECT DESIGN CRITERIA	RECONSTRUCTION (NON-FREEWAY)	PARTIAL RECONSTRUCTION (4R) (FREEWAY)	PARTIAL RECONSTRUCTION (4R) (FREEWAY)
FUNCTIONAL CLASSIFICATION	PRINCIPAL ARTERIAL	RAMP	PRINCIPAL ARTERIAL
RURAL/URBAN	URBAN (INTERMEDIATE)	RURAL	URBAN/RURAL FREEWAY
TERRAIN	LEVEL	LEVEL	LEVEL
ACCESS CONTROL	FULL	FULL	FULL

PROJECT DESCRIPTION

Interchange Modification beginning at a point on S.R. 26 approximately 2,440 feet west of I-65 and ending at a point approximately 1,095 feet east of I-65, a distance of approximately 3,535 feet, all in Fairfield Township, Tippecanoe County, Indiana.

GROSS LENGTH: - 0.669 MI.
NET LENGTH: - 0.669 MI.

LONG: - 1"=50' *PROFILE* *LONG: - 1"=50'*
TRANS: - 1"=50' *TRANS: - 1"=5'*

MAX. GRADE: 0.60%

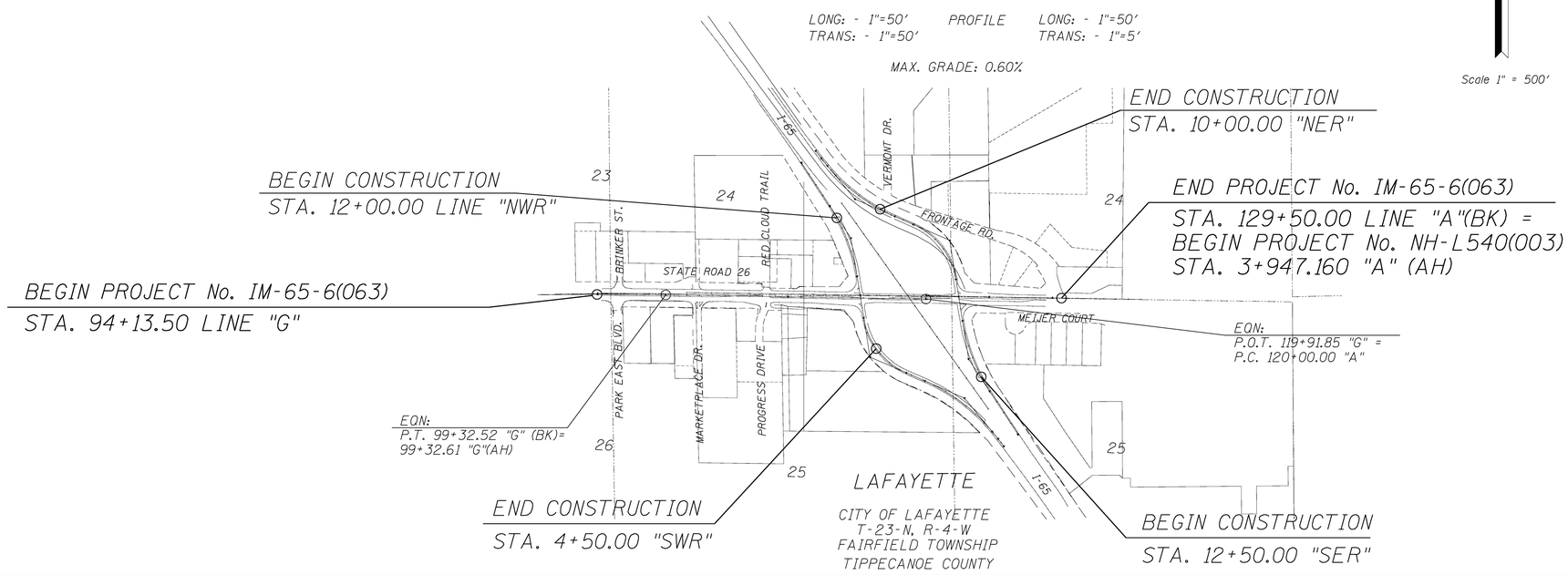

Scale 1" = 500'

PROJECT LOCATION SHOWN BY

LEGEND

FOR CONSTRUCTION SIGNS AND BARRICADES.
SEE MAINTENANCE OF TRAFFIC SHEETS NO. 10-25

Longitude: 86° 49' 15" W
Latitude: 40° 25' 03" N

INDIANA DEPARTMENT OF TRANSPORTATION
STANDARD SPECIFICATIONS DATED 2008
TO BE USED WITH THESE PLANS

CTE | AECOM
8902 VINCENNES CIRCLE SUITE D, INDIANAPOLIS, INDIANA 46268-3019

PLANS PREPARED BY: CTE | AECOM (317) 297-6200 PHONE NUMBER

CERTIFIED BY: Jeffrey E. Lazzelle 1-9-08 DATE

APPROVED FOR LETTING: CHIEF, DIVISION OF DESIGN DATE

JEFFREY E. LAZZELLE REGISTERED No. 860163 STATE OF INDIANA PROFESSIONAL ENGINEER

DESIGNATION	
9802780	
SHEETS	
1 of 136	
CONTRACT	PROJECT
IR-29162	IM-65-6(063)

UTILITIES

TELEPHONE:

Verizon
2401 Chicago Street
Valparaiso, IN 46383
(219) 531-9237

ELECTRIC

Duke Energy
1619 West Deffenbaugh Street
Kokomo, IN 46902
(812) 375-2071

SANITARY SEWER/WATER:

City of Lafayette-Waterworks
20 N. 6th St.
Lafayette, IN 47901
(765) 807-1050

GAS:

Vectren Energy-Gas
1250 S. Creasy Lane
Lafayette, IN 47905
(765) 449-5630

CABLE:

Insight Communications
325 South Creasy Lane
Lafayette, IN 47905
(317) 776-4484

REVISIONS

SHEET NO.	DATE	REVISED

R/W INDEX

GENERAL NOTES

**	All Earth Shoulders, Median Areas and Cut and Fill slopes shall be plain or mulched seeded except where Sodding is specified.

** General Notes Required

FEDERAL ROAD REGION NO.	STATE	PROJECT NO.	FISCAL YEAR	SHEET NO.	TOTAL SHEETS
5	IND.	IM-65-6(063)	2004	2	136

INDEX

SHEET NO.	DESIGNATION
1	TITLE SHEET
2	INDEX AND GENERAL NOTES
3-6	TYPICAL CROSS SECTIONS
7-8	PLAT NO. 1
9	REFERENCES
10-25	MAINTENANCE OF TRAFFIC PLANS
26-28	PLAN AND PROFILE SHEETS (SR 26)
29-32	RAMP PROFILES
33,34	SUPERELEVATION TRANSITIONS
35-41	CONSTRUCTION DETAILS (SR 26)
42,43	INTERCHANGE GEOMETRICS
44	INTERCHANGE CONSTRUCTION DETAILS
45	INTERCHANGE RIGHT OF WAY
46	INTERCHANGE DRAINAGE
47-49	SPOT ELEVATION DETAILS
50-51	CRASH WALL DETAILS
52-57	RETAINING WALL DETAILS
58-60	UNDERDRAIN LAYOUT
61-64	SIGNAL DETAILS
65-67	PAVEMENT MARKING DETAILS
68	MISCELLANEOUS TABLE
69	APPROACH TABLE
70-73	UNDERDRAIN TABLE
74	STRUCTURE DATA TABLE
75,76	PIPE MATERIAL TABLE
77	EROSION CONTROL TABLE
78-136	CROSS SECTIONS

JEFFREY E. LAZZELL
REGISTERED
No. 86Ø163
STATE OF INDIANA
PROFESSIONAL ENGINEER

RECOMMENDED FOR APPROVAL
Jeffrey E. Lazzell 2-15-08
DESIGN ENGINEER DATE

DESIGNED: JEL DRAWN: FJ
CHECKED: TA CHECKED: JEL

INDIANA DEPARTMENT OF TRANSPORTATION

INDEX / GENERAL NOTES

HORIZONTAL SCALE	BRIDGE FILE
NONE	
VERTICAL SCALE	DESIGNATION
NONE	9802780

SURVEY BOOK	SHEETS
17135	2 of 136
CONTRACT	PROJECT
IR-29162	IM-65-6(063)

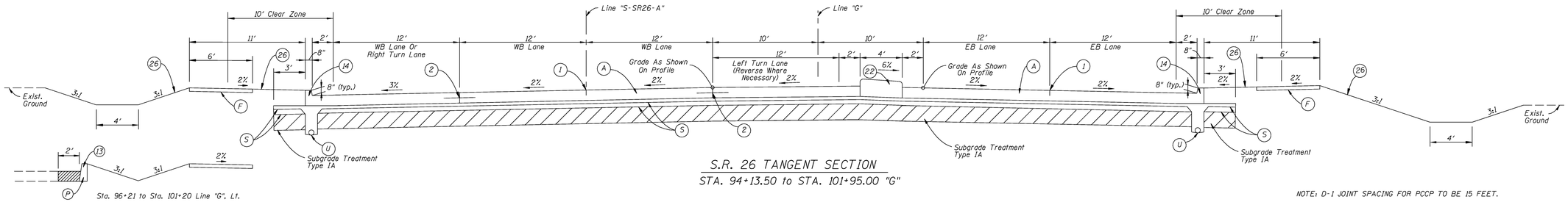

S.R. 26 TANGENT SECTION

STA. 94+13.50 to STA. 101+95.00 "G"

NOTE: D-1 JOINT SPACING FOR PCCP TO BE 15 FEET.

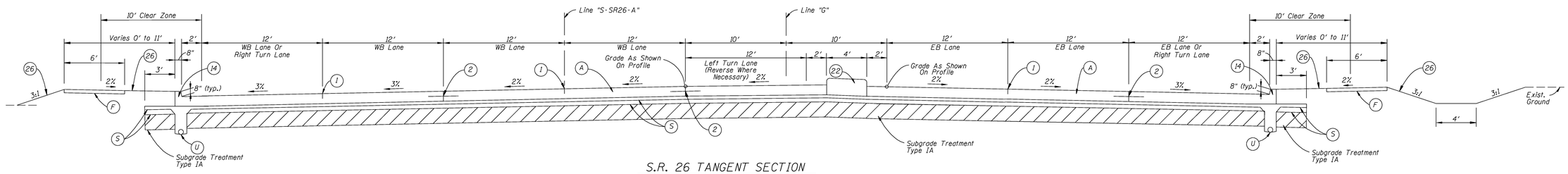

S.R. 26 TANGENT SECTION

STA. 101+95.00 to STA. 114+50.00 "G"

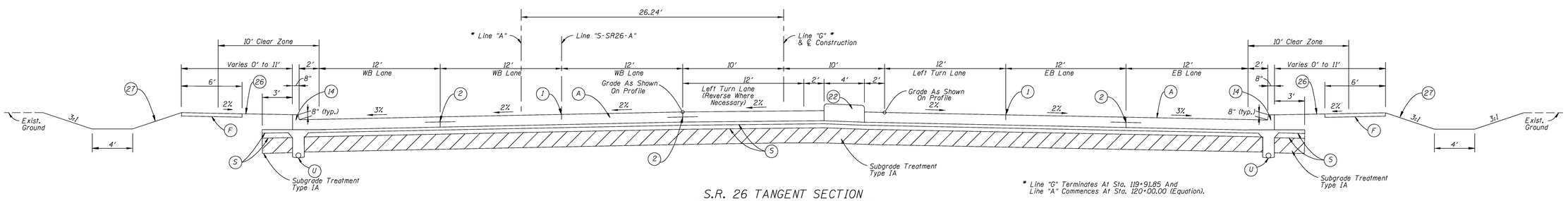

S.R. 26 TANGENT SECTION

STA. 114+50.00 to STA. 117+82.00 "G"

STA. 119+35.00 "G" to STA. 122+50.00 "A"

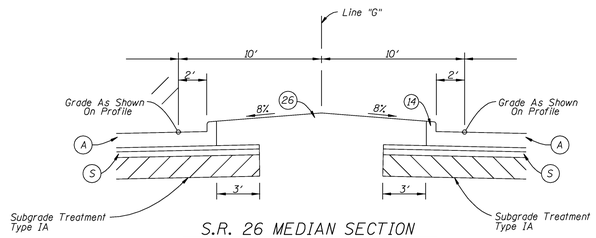

S.R. 26 MEDIAN SECTION

STA. 109+50.00 "G" to STA. 114+50.00 "G"

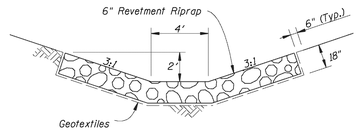

REVETMENT RIPRAP DITCH DETAIL

SCALE: 1/4" = 1'-0"

LEGEND

- (A) QC/QA PCCP - 14"
- (F) Concrete Sidewalk 4"
- (P) HMA for Patching - 12"
- (S) Subbase FOR PCCP- 3" Of Coarse Aggregate #8 On 6" Of Coarse Aggregate #53
- (U) 6" Underdrain (Pipe Type 4)
- (1) Longitudinal Joint
- (2) Longitudinal Contraction Joint
- (13) Concrete Curb
- (14) Integral Concrete Curb, Type C
- (22) Concrete Center Curb, Type C
- (26) Sodding (Nursery)
- (27) Mulched Seeding, R

JEFFREY E. LAZZELL REGISTERED No. 860163 STATE OF INDIANA PROFESSIONAL ENGINEER

RECOMMENDED FOR APPROVAL — DESIGN ENGINEER — 2-15-08 DATE

DESIGNED: B.G.M. DRAWN: B.G.M.

CHECKED: J.E.L. CHECKED: J.E.L.

INDIANA DEPARTMENT OF TRANSPORTATION

TYPICAL CROSS SECTIONS LINE "G"

HORIZONTAL SCALE	BRIDGE FILE
1" = 5'	
VERTICAL SCALE	DESIGNATION
1" = 5'	9802780
SURVEY BOOK	SHEETS
17135	3 of 136
CONTRACT	PROJECT
IR-29162	IM-65-6(063)

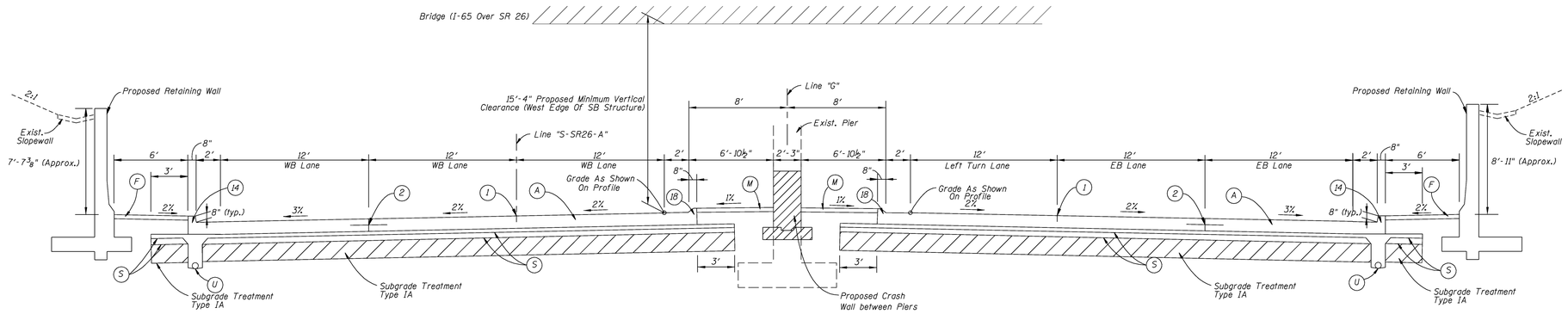

S.R. 26 SECTION (UNDER I-65 BRIDGE)

STA. 117+82.00 to STA. 119+35.00 "G"

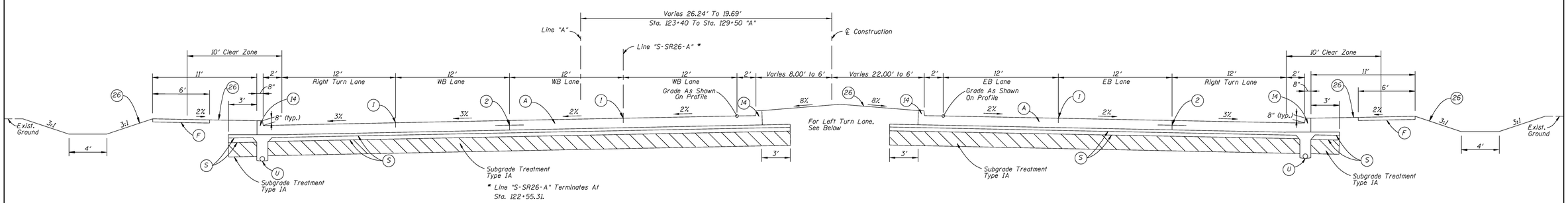

S.R. 26 TANGENT SECTION

STA. 122+50.00 to STA. 129+50.00 "A"

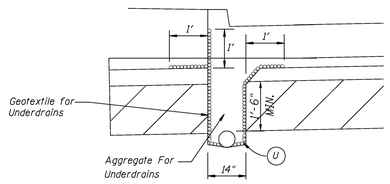

UNDERDRAIN DETAIL

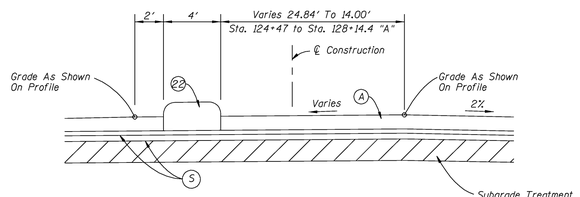

SR 26 LEFT TURN LANE

STA. 124+47 to STA. 128+14.4 "A"

Note:
See Constr. Details for Profile Grade Location from Sta. 122+12.69 "A" to Sta. 129+50.00 "A"

LEGEND

- (A) QC/QA PCCP - 14"
- (F) Concrete Sidewalk 4"
- (M) HMA For Sidewalk - 4½" 165#/SYD HMA Surface 9.5mm on 330#/SYD HMA Intermediate 19.0mm
- (S) Subbase FOR PCCP- 3" Of Coarse Aggregate #8 On 6" Of Coarse Aggregate #53
- (U) 6" Underdrain (Pipe Type 4)
- (1) Longitudinal Joint
- (2) Longitudinal Contraction Joint
- (14) Integral Concrete Curb, Type C
- (18) Integral Concrete Curb, Type B
- (22) Concrete Center Curb, Type C
- (26) Sodding (Nursery)

JEFFREY E. LAZZELL REGISTERED No. 860163 STATE OF INDIANA PROFESSIONAL ENGINEER

RECOMMENDED FOR APPROVAL — DESIGN ENGINEER — 1-9-08 DATE

DESIGNED: BGM DRAWN: BGM
CHECKED: JEL CHECKED: JEL

INDIANA
DEPARTMENT OF TRANSPORTATION

TYPICAL CROSS SECTIONS LINE "G"

HORIZONTAL SCALE	BRIDGE FILE
1" = 5'	
VERTICAL SCALE	DESIGNATION
1" = 5'	9802780
SURVEY BOOK	SHEETS
17135	4 of 136
CONTRACT	PROJECT
IR-29162	IM-65-6(063)

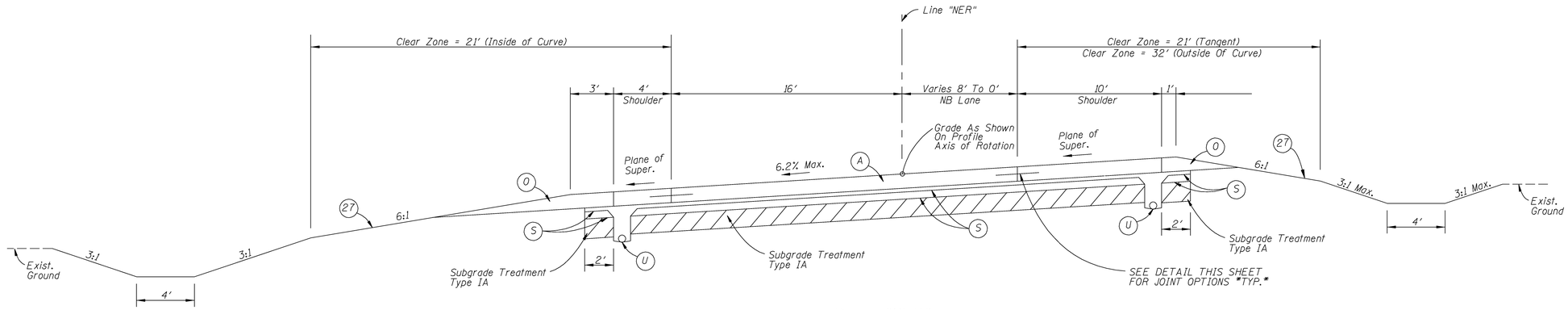

Ramp "NER"
STA. 0+36.56 to STA. 10+00.00 "NER"

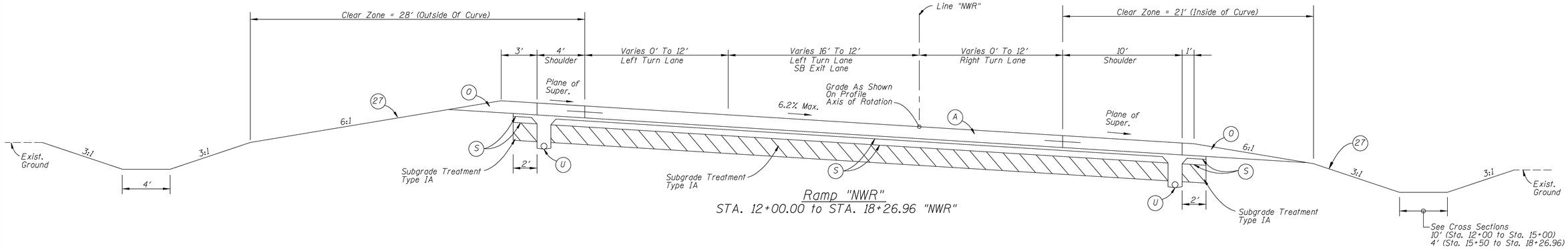

Ramp "NWR"
STA. 12+00.00 to STA. 18+26.96 "NWR"

OPTIONS A AND B:

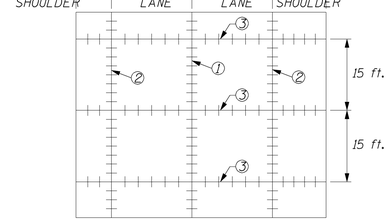

OPTION C:

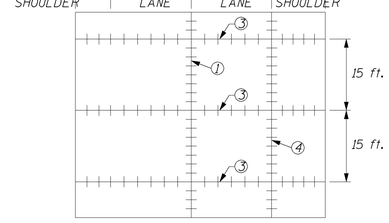

① LONGITUDINAL JOINT
② OPTION A: LONGITUDINAL JOINT
OPTION B: LONGITUDINAL CONSTR. JOINT
③ TYPE D-1 CONTRACTION JOINT
④ LONGITUDINAL JOINT OR
LONGITUDINAL CONSTR. JOINT

Ramp joint options

LEGEND

- (A) QC/QA PCCP - 14"
- (S) Subbase FOR PCCP- 3" Of Coarse Aggregate #8 On 6" Of Coarse Aggregate #53
- (U) 6" Underdrain (Pipe Type 4)
- (O) Compacted Aggregate For Base #53
- (27) Mulched Seeding, R

JEFFREY E. LAZZELL REGISTERED No. 860163 STATE OF INDIANA PROFESSIONAL ENGINEER

RECOMMENDED FOR APPROVAL — DESIGN ENGINEER — DATE 1-9-08

DESIGNED: BGM DRAWN: BGM
CHECKED: JEL CHECKED: JEL

INDIANA
DEPARTMENT OF TRANSPORTATION

TYPICAL CROSS SECTIONS
LINE "NER" & LINE "NWR"

HORIZONTAL SCALE	BRIDGE FILE
4" = 1'	
VERTICAL SCALE	DESIGNATION
4" = 1'	9802780
SURVEY BOOK	SHEETS
17135	5 of 136
CONTRACT	PROJECT
IR-29162	IM-65-6(063)

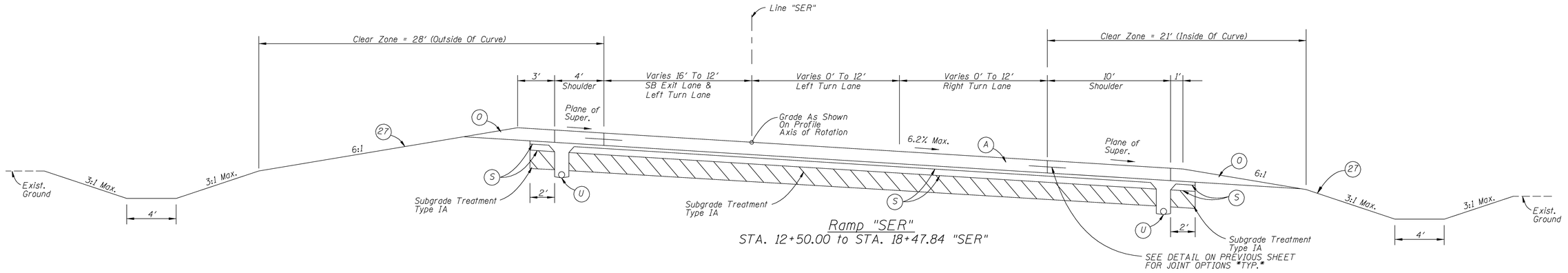

Ramp "SER"
STA. 12+50.00 to STA. 18+47.84 "SER"

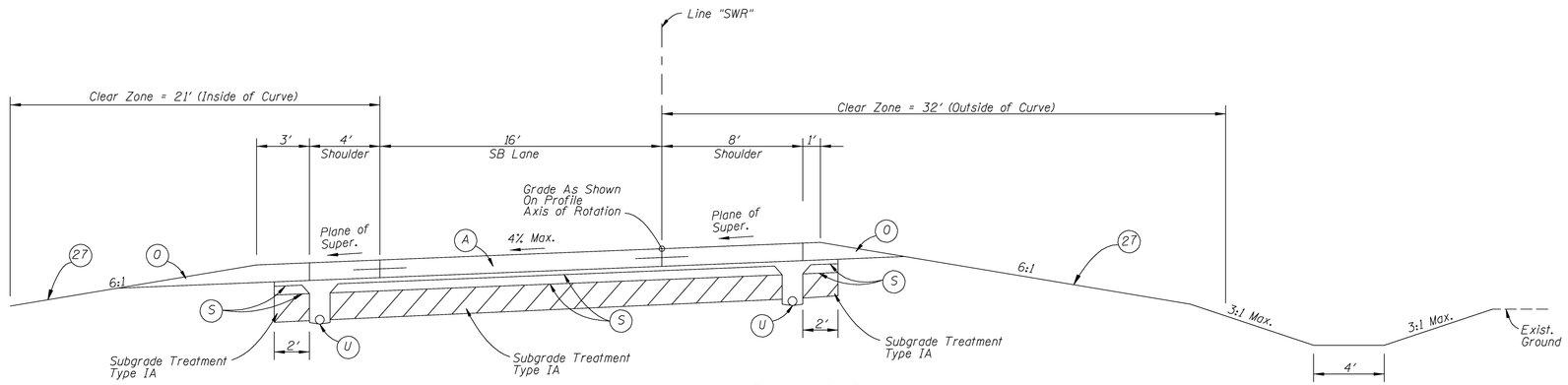

Ramp "SWR"
STA. 0+69.05 to STA. 4+50.00 "SWR"

LEGEND

- (A) QC/QA PCCP - 14"
- (S) Subbase FOR PCCP- 3" Of Coarse Aggregate #8 On 6" Of Coarse Aggregate #53
- (U) 6" Underdrain (Pipe Type 4)
- (O) Compacted Aggregate For Base #53
- (27) Mulched Seeding, R

JEFFREY E. LAZZELL REGISTERED No. 860163 STATE OF INDIANA PROFESSIONAL ENGINEER

RECOMMENDED FOR APPROVAL — DIVISION ENGINEER — 2-15-08 DATE

DESIGNED: BGM | DRAWN: BGM

CHECKED: JEL | CHECKED: JEL

INDIANA
DEPARTMENT OF TRANSPORTATION

TYPICAL CROSS SECTIONS
LINE "SER" & LINE "SWR"

HORIZONTAL SCALE	BRIDGE FILE
1/4" = 1'	
VERTICAL SCALE	DESIGNATION
1/4" = 1'	9802780
SURVEY BOOK	SHEETS
17135	6 of 136
CONTRACT	PROJECT
IR-29162	IM-65-6(063)

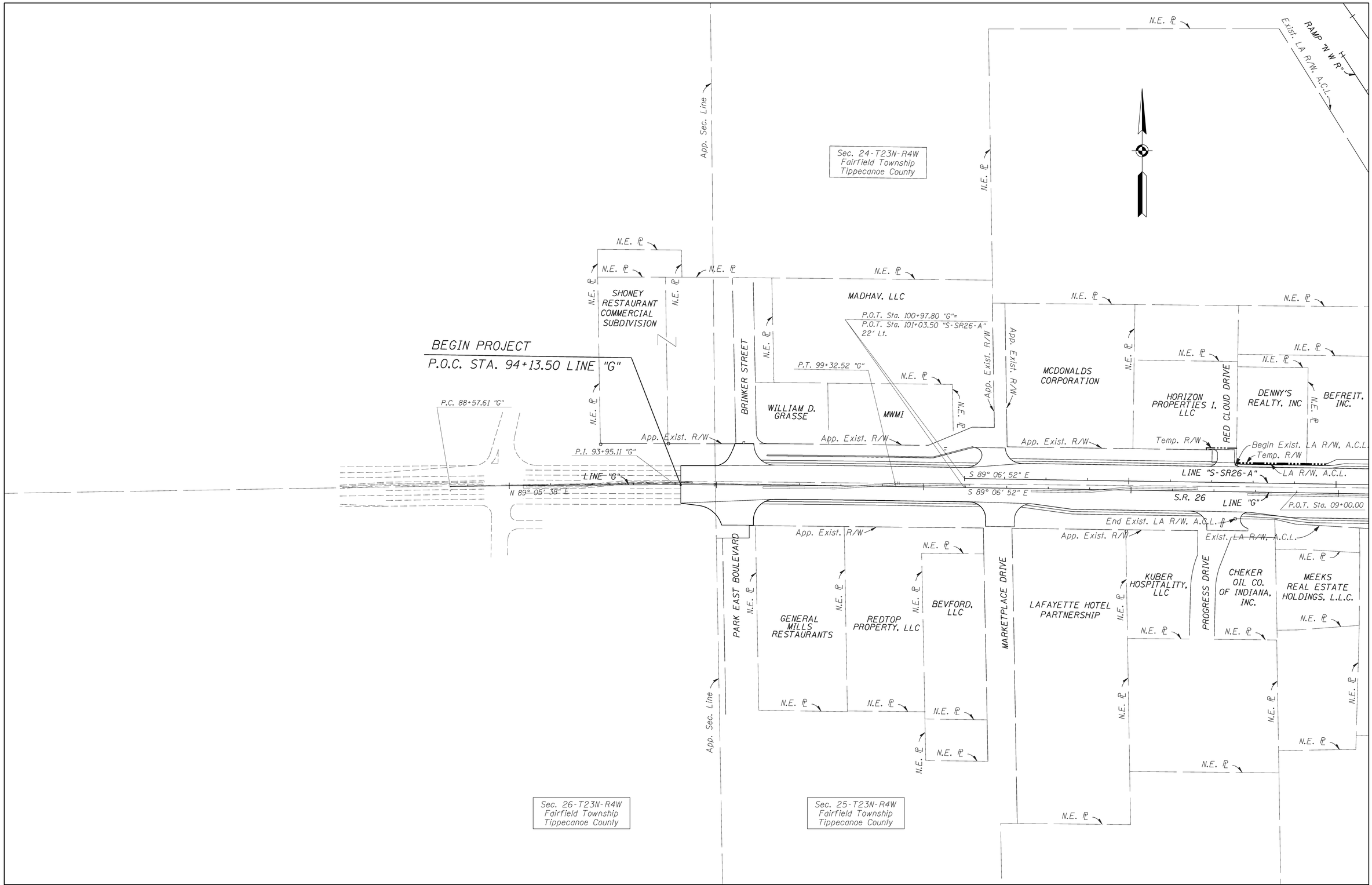

JEFFREY E. LAZELL
REGISTERED
No. 860163
STATE OF INDIANA
PROFESSIONAL ENGINEER

RECOMMENDED FOR APPROVAL
Jeffrey E. Lazell 1-9-08
DESIGN ENGINEER DATE

DESIGNED: BGM DRAWN: BGM
CHECKED: JEL CHECKED: JEL

INDIANA
DEPARTMENT OF TRANSPORTATION

PLAT NO. 1

HORIZONTAL SCALE	BRIDGE FILE
1" = 100'	
VERTICAL SCALE	DESIGNATION
None	9802780
SURVEY BOOK	SHEETS
17135	7 of 136
CONTRACT	PROJECT
IR-29162	IM-65-6(063)

END PROJECT IM-65-6/063
STA. 129+50.00 "A" (BK)
BEGIN PROJECT NH-L540(003)
STA. 3+947.160 "A" (AH)

P.C.C. 15+43.63 "N E R"
N 36° 36' 37" W
App. Exist. R/W
Exist. LA R/W, A.C.L.
RAMP "N E R"
S 33° 10' 26" E
RAMP "N W R"
P.C. 8+71.49 "N E R"
App. Exist. R/W
App. Sec. Line
N 66° 29' 45" W
P.C. 11+00 "N W R"
P.T. 7+11.48 "N E R"
Exist. LA R/W, A.C.L.
App. Exist. R/W
S 35° 27' 52" E
LINE "A-I-65"
Exist. LA R/W, A.C.L.
RAMP "N E R"
UNIFAC 65, LLC
P.C. 1+37.66 "N E R"
RAMP "N W R"
S 09° 06' 52" E
P.T. 17+01.49 "N W R"
STA 118+53.00 "S-SR26-A" =
STA 535+98.67 I-65 "A"
P.C. 120+00.00 "A"
SIGNATURE INNS, INC.
Exist. LA R/W, A.C.L.
STA 114+75.31 "S-SR26-A" =
STA 18+51.33 "N W R"
STA 0+00.00 "S W R"
S 89° 06' 52" E
LINE "A"
LINE "G"
S.R. 26
LINE "S-SR26-A"
N 09° 06' 52" W
N 88° 44' 39" E
S.R. 26
S 89° 06' 52" E
S 09° 06' 52" E
STA 114+74.82 "G" =
STA 114+80.52 "S-SR26-A"
22.00' LEFT
STA 122+55.31 "S-SR26-A" =
STA 18+96.01 "S E R"
STA 0+00.00 "N E R"
STA 119+91.85 "G" =
STA 119+97.52 "S-SR26-A",
22.00' LEFT
STA P.C. 120+00.00 "A",
26.24' LEFT
Exist. LA R/W, A.C.L.
P.C. 1+82.34 RAMP "S W R"
MOTEL PROPERTY
DEVELOPMENT COMPANY, LLC
RAMP "S W R"
Sec. 25-T23N-R4W
Fairfield Township
Tippecanoe County
P.T. 7+56.16 "S W R"
N.E. ℄
S 66° 29' 45" E
Exist. LA R/W, A.C.L.
MEEKS REAL ESTATE HOLDINGS, LLC
P.C. 9+16.17 "S W R"
App. Sec. Line
S 35° 27' 52" E
LINE "A-I-65"
RAMP "S E R"
P.C. 11+00 "S E R"
Sec. 25-T23N-R4W
Fairfield Township
Tippecanoe County
P.T. 17+01.49 "S E R"
TIPPECANOE COUNTY
MOTEL CORPORATION
Lot 5
Exist. LA R/W, A.C.L.
MEIJER COURT
App. Exist. R/W
PURDUE
EMPLOYEES
FEDERAL
CREDIT UNION
MAYS
PROPERTIES,
LLC
Lot 4B
Lot 4A
Lot 3
Lot 2
Lot 1
CRACKER
BARREL
OLD COUNTRY
STORE, INC.
P.I. 125+00.04 "A"
Begin Exist LA R/W, A.C.L.
Exist. LA R/W, A.C.L.
100' Taper
110°00'00"
FRONTAGE RD.
P.T. 130+00.08 "A"
S 89° 06' 42" E
S 89° 06' 42" E
LINE "A"
LINE "PR-A"
STA 130+50.30 "A" =
STA 26+38.15 "S-FR"
STA 130+57.47 "PR-A" =
STA 26+17.20 "S-FR"
P.C. 27+56.07 "S-FR"
Sec. 24-T23N-R4W
Fairfield Township
Tippecanoe County
N.E. ℄

JEFFREY E. LALLEY
No. 860163
REGISTERED
STATE OF INDIANA
PROFESSIONAL ENGINEER

RECOMMENDED FOR APPROVAL
DESIGN ENGINEER
1-9-08
DATE

DESIGNED: BGM
DRAWN: BGM
CHECKED: JEL
CHECKED: JEL

INDIANA
DEPARTMENT OF TRANSPORTATION

PLAT NO. 1

HORIZONTAL SCALE	BRIDGE FILE
1" = 100'	
VERTICAL SCALE	DESIGNATION
None	9802780
SURVEY BOOK	SHEETS
17135	8 of 136
CONTRACT	PROJECT
IR-29162	IM-65-6(063)

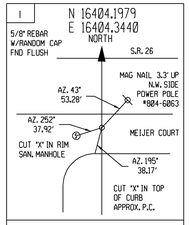

RANDOM CONTROL

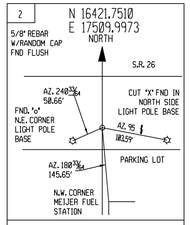

RANDOM CONTROL

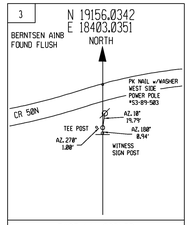

EAST 1/4 CORNER
SEC 24-T23N-R4W - EE20

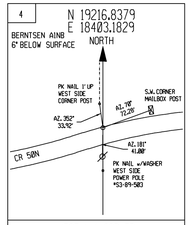

WEST 1/4 CORNER
SEC 19-T23N-R3W - EE20c

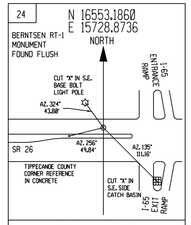

SOUTH 1/4 CORNER
SEC 24-T23N-R4W - DD21

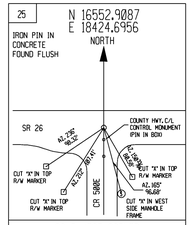

SOUTHWEST CORNER
SEC 19-T23N-R3W - EE21c

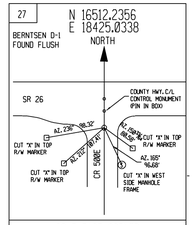

SOUTHEAST CORNER
SEC 24-T23N-R4W - EE21

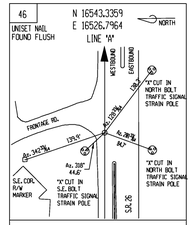

LINE "A" P.T. 130+00.08

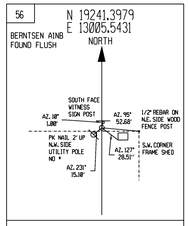

WEST 1/4 CORNER
SEC 24-T23N-R4W - CC20

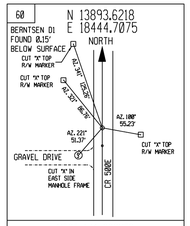

WEST 1/4 CORNER
SEC 30-T23N-R3W - EE22c

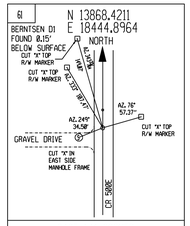

EAST 1/4 CORNER
SEC 25-T23N-R4W - EE22

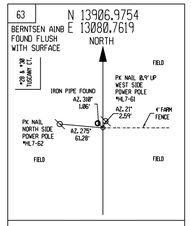

WEST 1/4 CORNER
SEC 25-T23N-R4W - CC22

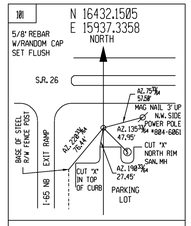

RANDOM CONTROL

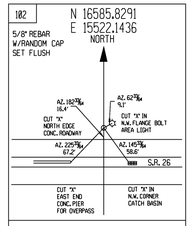

RANDOM CONTROL

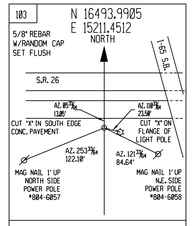

RANDOM CONTROL

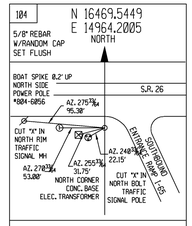

RANDOM CONTROL

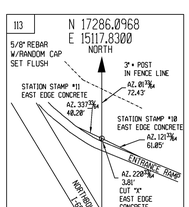

RANDOM CONTROL

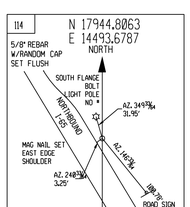

RANDOM CONTROL

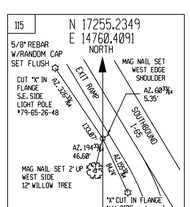

RANDOM CONTROL

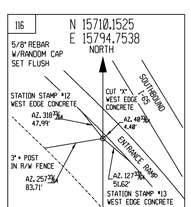

RANDOM CONTROL

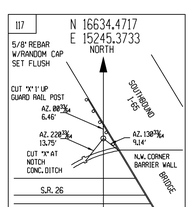

RANDOM CONTROL

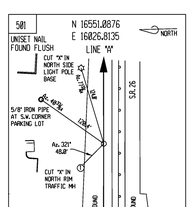

RANDOM CONTROL

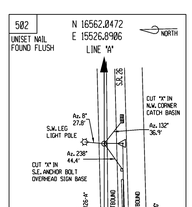

RANDOM CONTROL

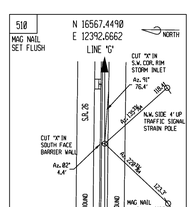

RANDOM CONTROL

RANDOM CONTROL

RANDOM CONTROL

RANDOM CONTROL

RANDOM CONTROL

RANDOM CONTROL

LINE "A" P.I. 125+00.84

LINE "A" P.C. 120+00.00 =
STA 119+97.52 "S-SR26-A" 4.88' RIGHT =
STA 119+91.85 "G" 26.88' RIGHT

LINE "G" P.C. 88+57.61

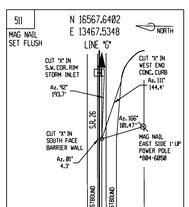

LINE "G" P.T. BACK: 99+32.52 =
AHEAD: 99+32.61

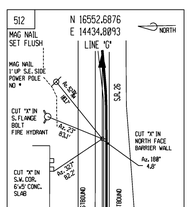

LINE "G" P.O.T. 109+00.00

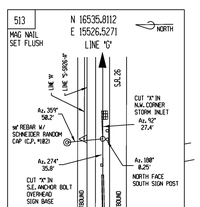

LINE "G" P.O.T. 119+91.85 =
"S-SR26-A" P.O.T. 119+97.52, 22.88' LEFT =
"A" P.C. 120+00.00, 26.88' LEFT

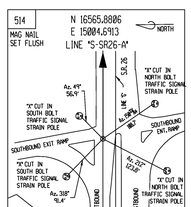

"S-SR26-A" P.O.T. STA 114+75.31 =
LINE "G" P.O.T. 114+64.61, 22.88' RIGHT

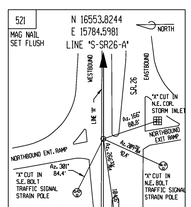

"S-SR26-A" P.O.T. STA 122+55.31 =
LINE "A" P.O.C. 122+55.31, 2.70 LEFT

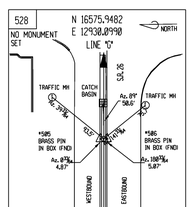

LINE "G" P.I. 93+95.11

JEFFREY E. LAZZELL
REGISTERED
No. 860163
STATE OF INDIANA
PROFESSIONAL ENGINEER

RECOMMENDED FOR APPROVAL
Jeffrey E. Lazzell 1-9-08
DESIGN ENGINEER DATE

DESIGNED: Schneider Corp. DRAWN: BGM
CHECKED: JEL CHECKED: JEL

INDIANA
DEPARTMENT OF TRANSPORTATION

REFERENCE NOTES
I-65 & S.R. 26

HORIZONTAL SCALE	BRIDGE FILE
VERTICAL SCALE	DESIGNATION
	9802780
SURVEY BOOK	SHEETS
17135	9 of 136
CONTRACT	PROJECT
IR-29162	IM-65-6(063)

CONSTRUCTION ZONE
DESIGN SPEED 35 MPH

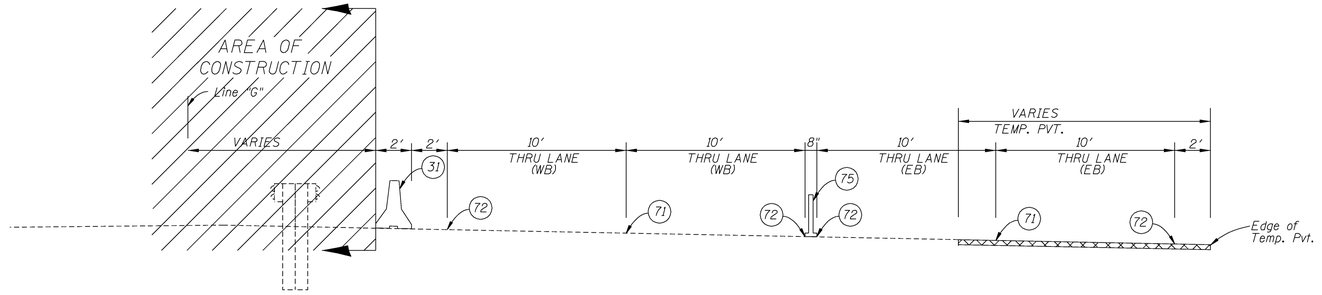

MAINTENANCE OF TRAFFIC SR 26

PHASE 1
SECTION A-A

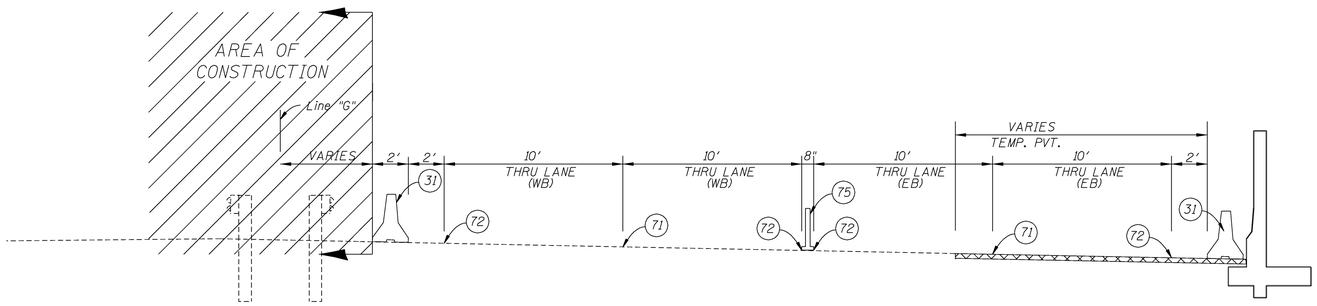

MAINTENANCE OF TRAFFIC SR 26

PHASE 1
SECTION B-B

LEGEND

(31) Temporary Traffic Barrier, Type 2
(71) Temporary Pavement Marking, 4IN., White, Broken
(72) Temporary Pavement Marking, 4IN., Yellow, Solid
(75) Flexible Tubular Marker
Temporary Pavement -
165 lbs/sys HMA Type C Surface On
275 lbs/sys HMA Type C Intermediate On
660 lbs/sys HMA Tpye C Base

JEFFREY E. LAZZELL
REGISTERED
No. 860163
STATE OF INDIANA
PROFESSIONAL ENGINEER

RECOMMENDED FOR APPROVAL _____ DESIGN ENGINEER
1-9-08 DATE

DESIGNED: MAB DRAWN: MHF
CHECKED: JEL CHECKED: MAB

INDIANA
DEPARTMENT OF TRANSPORTATION

MAINTENANCE OF TRAFFIC
TYPICAL SECTIONS

HORIZONTAL SCALE	BRIDGE FILE
4" = 1'	
VERTICAL SCALE	DESIGNATION
4" = 1'	9802780
SURVEY BOOK	SHEETS
17135	10 of 136
CONTRACT	PROJECT
IR-29162	IM-65-6(063)

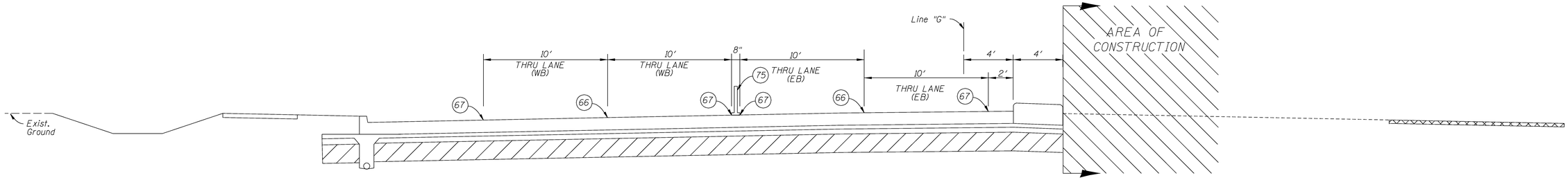

MAINTENANCE OF TRAFFIC SR 26

PHASE II
SECTION A-A
STATION 97+00

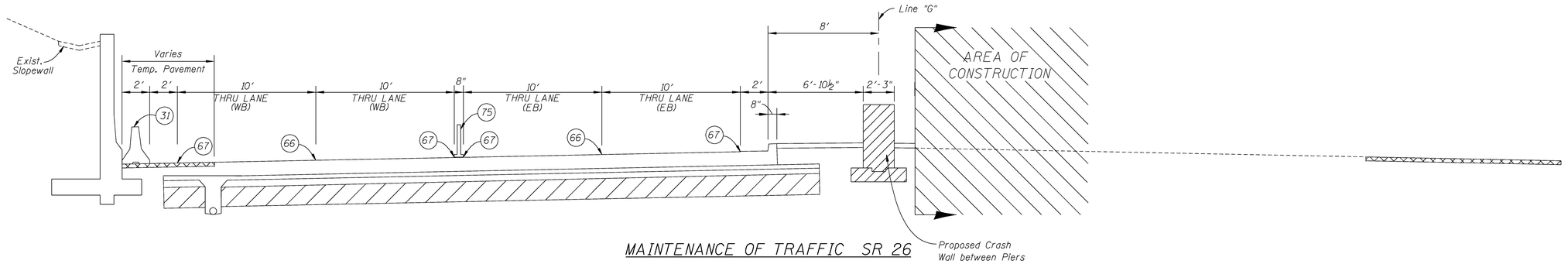

MAINTENANCE OF TRAFFIC SR 26

PHASE II
SECTION B-B

LEGEND

- (31) Temporary Traffic Barrier, Type 2
- (66) Temporary Pavement Marking, Removeable, 4in., White, Broken
- (67) Temporary Pavement Marking, Removeable, 4in., Yellow, Solid
- (75) Flexible Tubular Marker
- Temporary Pavement - 165 lbs/sys HMA Type C Surface On 275 lbs/sys HMA Type C Intermediate On 660 lbs/sys HMA Tpye C Base

JEFFREY E. LAZZELL REGISTERED No. 860163 STATE OF INDIANA PROFESSIONAL ENGINEER

RECOMMENDED FOR APPROVAL — DIVISION ENGINEER — DATE 1-9-08

DESIGNED: MAB DRAWN: MHF
CHECKED: JEL CHECKED: MAB

INDIANA
DEPARTMENT OF TRANSPORTATION

MAINTENANCE OF TRAFFIC
TYPICAL SECTIONS

HORIZONTAL SCALE	BRIDGE FILE
1/4" = 1'	
VERTICAL SCALE	DESIGNATION
1/4" = 1'	9802780
SURVEY BOOK	SHEETS
17135	11 of 136
CONTRACT	PROJECT
IR-29162	IM-65-6(063)

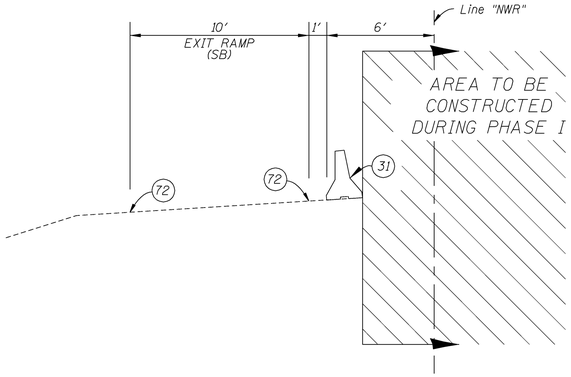

MAINTENANCE OF TRAFFIC RAMP 'NWR'
PHASE I

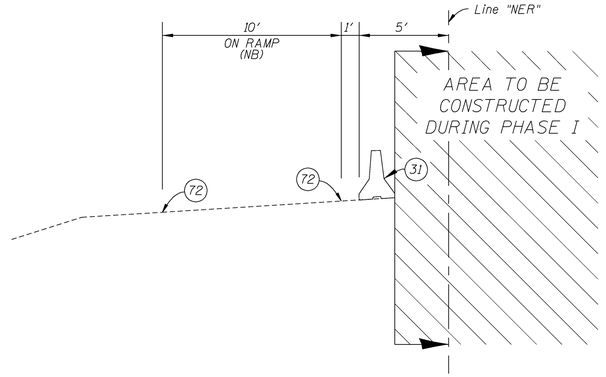

MAINTENANCE OF TRAFFIC RAMP 'NER'
PHASE I

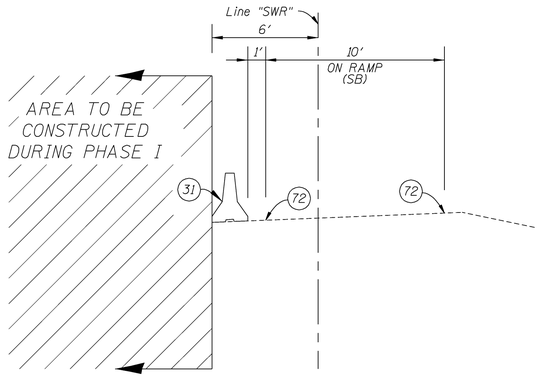

MAINTENANCE OF TRAFFIC RAMP 'SWR'
PHASE I

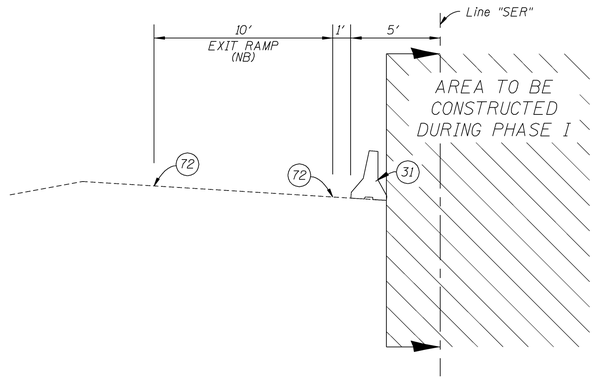

MAINTENANCE OF TRAFFIC RAMP 'SER'
PHASE I

LEGEND

- (31) Temporary Traffic Barrier, Type 2
- (70) Temporary Pavement Marking, 4in., White, Solid
- (71) Temporary Pavement Marking, 4in., White, Broken
- (72) Temporary Pavement Marking, 4in., Yellow, Solid
- (73) Temporary Pavement Marking, 24in., White, Solid
- (75) Flexible Tubular Marker
- Temporary Pavement -
  165 lbs/sys HMA Type C Surface On
  275 lbs/sys HMA Type C Intermediate On
  660 lbs/sys HMA Tpye C Base

JEFFREY E. LAZZELL
REGISTERED
No. 860163
STATE OF INDIANA
PROFESSIONAL ENGINEER

RECOMMENDED FOR APPROVAL _____ DESIGN ENGINEER 1-9-08 DATE

DESIGNED: MAB DRAWN: MHF
CHECKED: JEL CHECKED: MAB

INDIANA
DEPARTMENT OF TRANSPORTATION

MAINTENANCE OF TRAFFIC
TYPICAL SECTIONS

HORIZONTAL SCALE	BRIDGE FILE
1/4" = 1'	
VERTICAL SCALE	DESIGNATION
1/4" = 1'	9802780
SURVEY BOOK	SHEETS
17135	12 of 136
CONTRACT	PROJECT
IR-29162	IM-65-6(063)

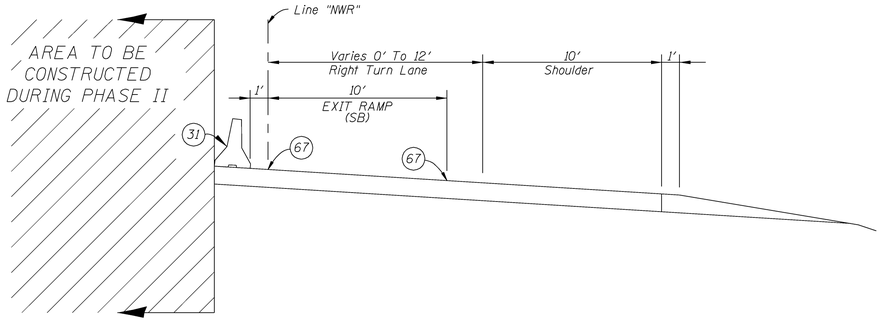

MAINTENANCE OF TRAFFIC RAMP 'NWR'
PHASE II

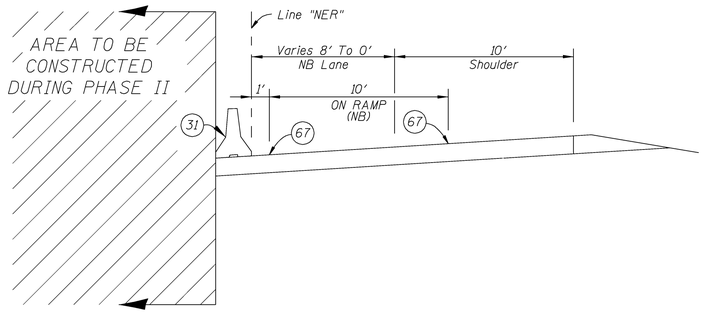

MAINTENANCE OF TRAFFIC RAMP 'NER'
PHASE II

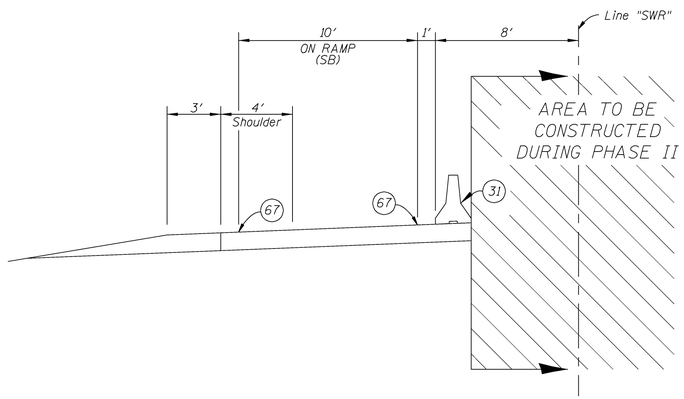

MAINTENANCE OF TRAFFIC RAMP 'SWR'
PHASE II

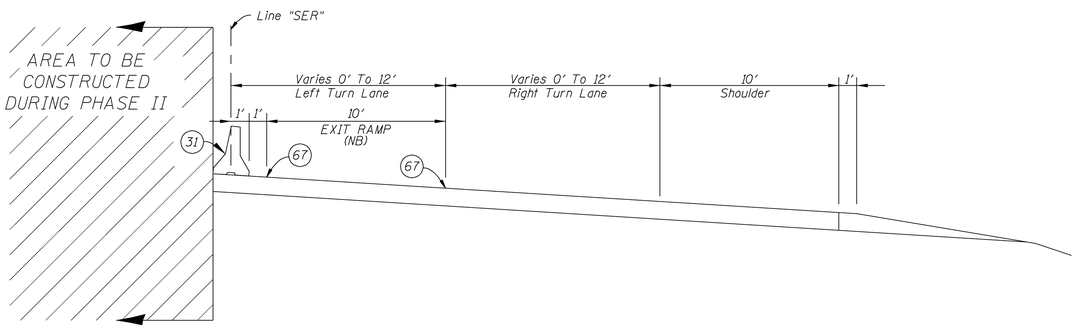

MAINTENANCE OF TRAFFIC RAMP 'SER'
PHASE II

LEGEND

- (31) Temporary Traffic Barrier, Type 2
- (65) Temporary Pavement Marking, Removable, 4in., White, Solid
- (66) Temporary Pavement Marking, Removable, 4in., White, Broken
- (67) Temporary Pavement Marking, Removable, 4in., Yellow, Solid
- (68) Temporary Pavement Marking, Removable, 24in., White, Solid
- (75) Flexible Tubular Marker
- Temporary Pavement -
  165 lbs/sys HMA Type C Surface On
  275 lbs/sys HMA Type C Intermediate On
  660 lbs/sys HMA Tpye C Base

JEFFREY E. LAITELL REGISTERED No. 860163 STATE OF INDIANA PROFESSIONAL ENGINEER

RECOMMENDED FOR APPROVAL — DESIGN ENGINEER — DATE: 1-9-08

DESIGNED: MAB | DRAWN: MHF
CHECKED: JEL | CHECKED: MAB

INDIANA
DEPARTMENT OF TRANSPORTATION

MAINTENANCE OF TRAFFIC
TYPICAL SECTIONS

HORIZONTAL SCALE	BRIDGE FILE
1/4" = 1'	
VERTICAL SCALE	DESIGNATION
1/4" = 1'	9802780
SURVEY BOOK	SHEETS
17135	13 of 136
CONTRACT	PROJECT
IR-29162	IM-65-6(063)

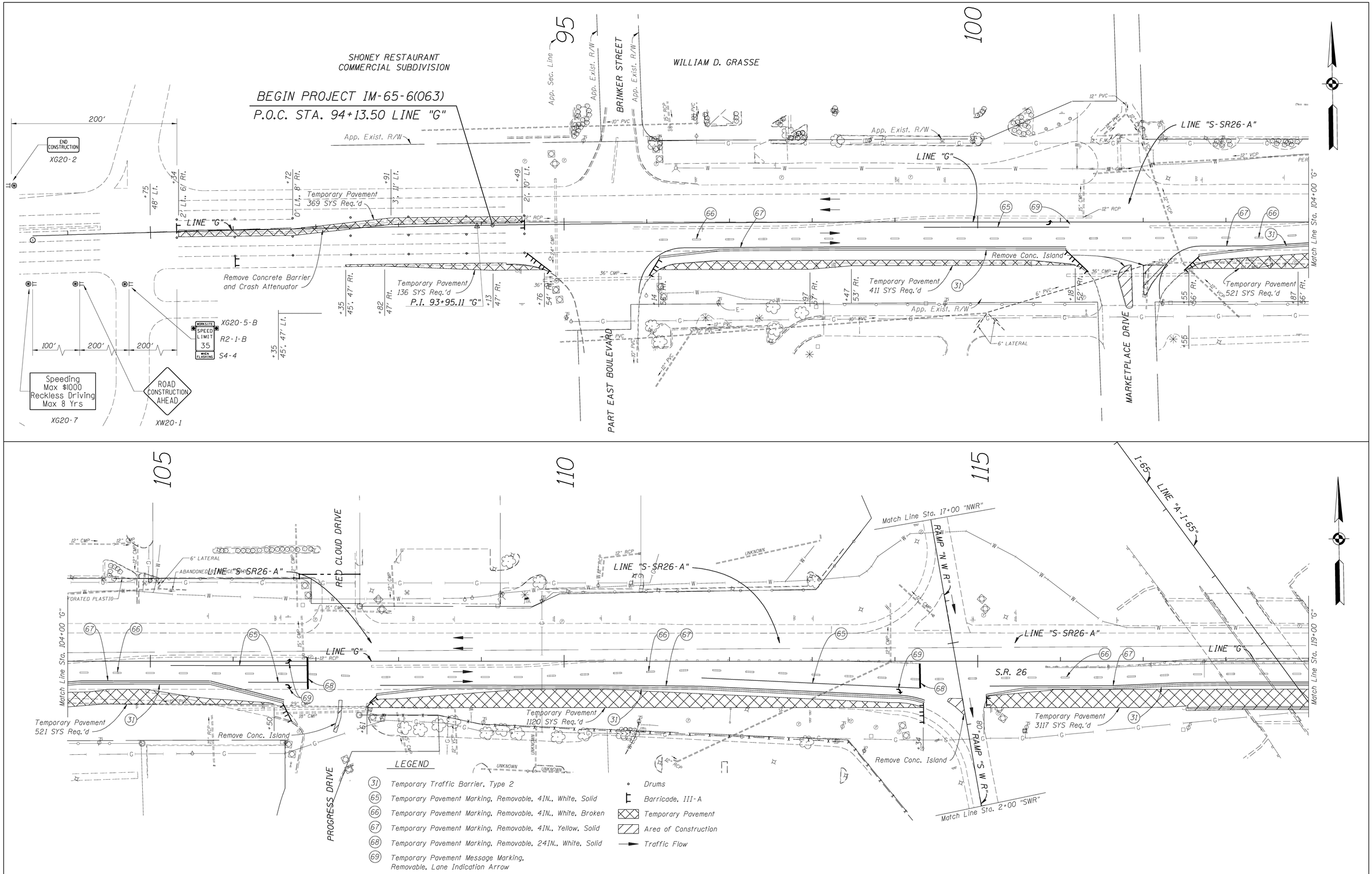

LEGEND

- (31) Temporary Traffic Barrier, Type 2
- (65) Temporary Pavement Marking, Removable, 4IN., White, Solid
- (66) Temporary Pavement Marking, Removable, 4IN., White, Broken
- (67) Temporary Pavement Marking, Removable, 4IN., Yellow, Solid
- (68) Temporary Pavement Marking, Removable, 24IN., White, Solid
- (69) Temporary Pavement Message Marking, Removable, Lane Indication Arrow
- Drums
- Barricade, III-A
- Temporary Pavement
- Area of Construction
- Traffic Flow

JEFFREY E. LAZELL REGISTERED No. 860163 STATE OF INDIANA PROFESSIONAL ENGINEER

RECOMMENDED FOR APPROVAL
DESIGN ENGINEER — DATE 1-9-08

DESIGNED: MAB DRAWN: MHF
CHECKED: JEL CHECKED: MAB

INDIANA DEPARTMENT OF TRANSPORTATION

MAINTENANCE OF TRAFFIC
PHASE I-A

HORIZONTAL SCALE	BRIDGE FILE
1" = 50'-0"	
VERTICAL SCALE	DESIGNATION
	9802780
SURVEY BOOK	SHEETS
17135	14 of 136
CONTRACT	PROJECT
IR-29162	IM-65-6(063)

120

125

130

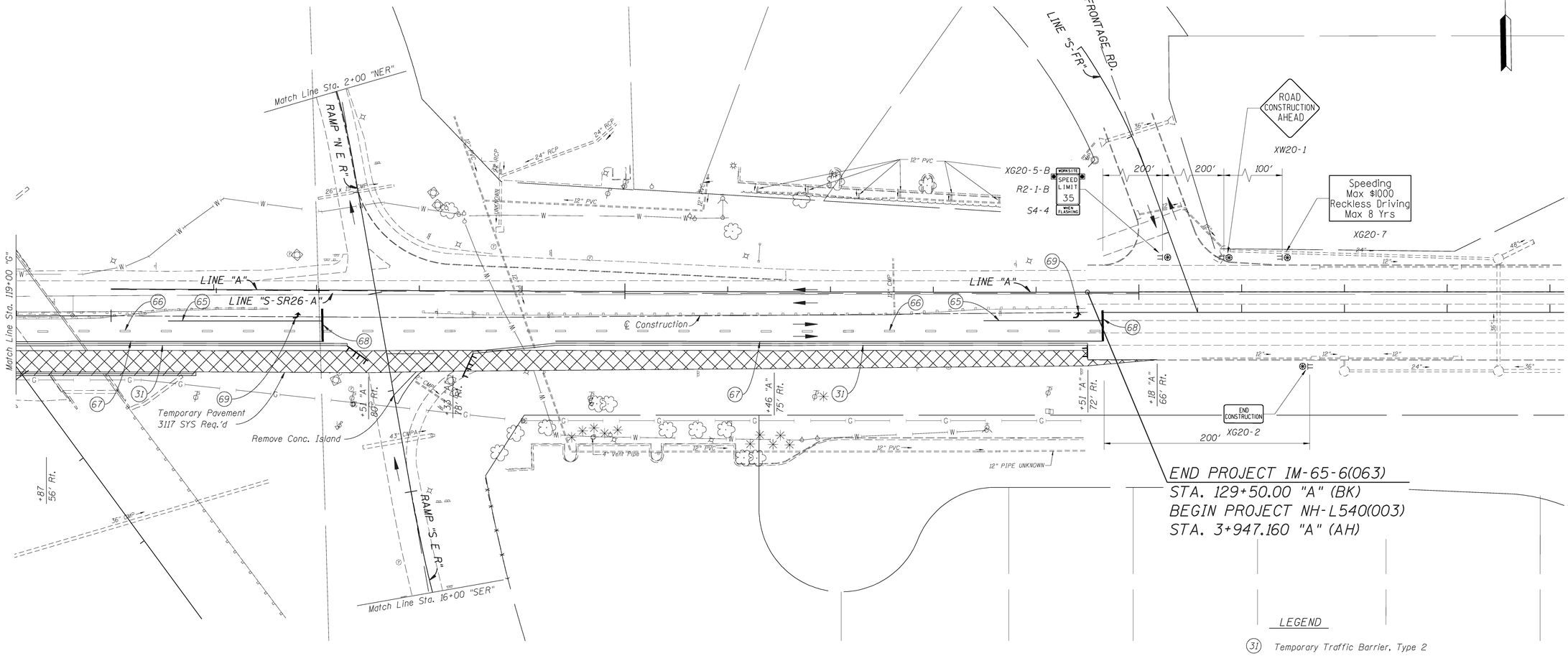

LEGEND

- (31) Temporary Traffic Barrier, Type 2
- (65) Temporary Pavement Marking, Removable, 4IN., White, Solid
- (66) Temporary Pavement Marking, Removable, 4IN., White, Broken
- (67) Temporary Pavement Marking, Removable, 4IN., Yellow, Solid
- (68) Temporary Pavement Marking, Removable, 24IN., White, Solid
- (69) Temporary Pavement Message Marking, Removable, Lane Indication Arrow
- Drums
- Barricade, Type III-A
- Temporary Pavement
- Area of Construction
- Traffic Flow

JEFFREY E. LAZZELL REGISTERED No. 860163 STATE OF INDIANA PROFESSIONAL ENGINEER

RECOMMENDED FOR APPROVAL — DESIGN ENGINEER — DATE 1-9-08

DESIGNED: MAB | DRAWN: MHF

CHECKED: JEL | CHECKED: MAB

INDIANA DEPARTMENT OF TRANSPORTATION

MAINTENANCE OF TRAFFIC PHASE I-A

HORIZONTAL SCALE	BRIDGE FILE
1" = 50'-0"	
VERTICAL SCALE	DESIGNATION
	9802780

SURVEY BOOK	SHEETS
17135	15 of 136
CONTRACT	PROJECT
IR-29162	IM-65-6(063)

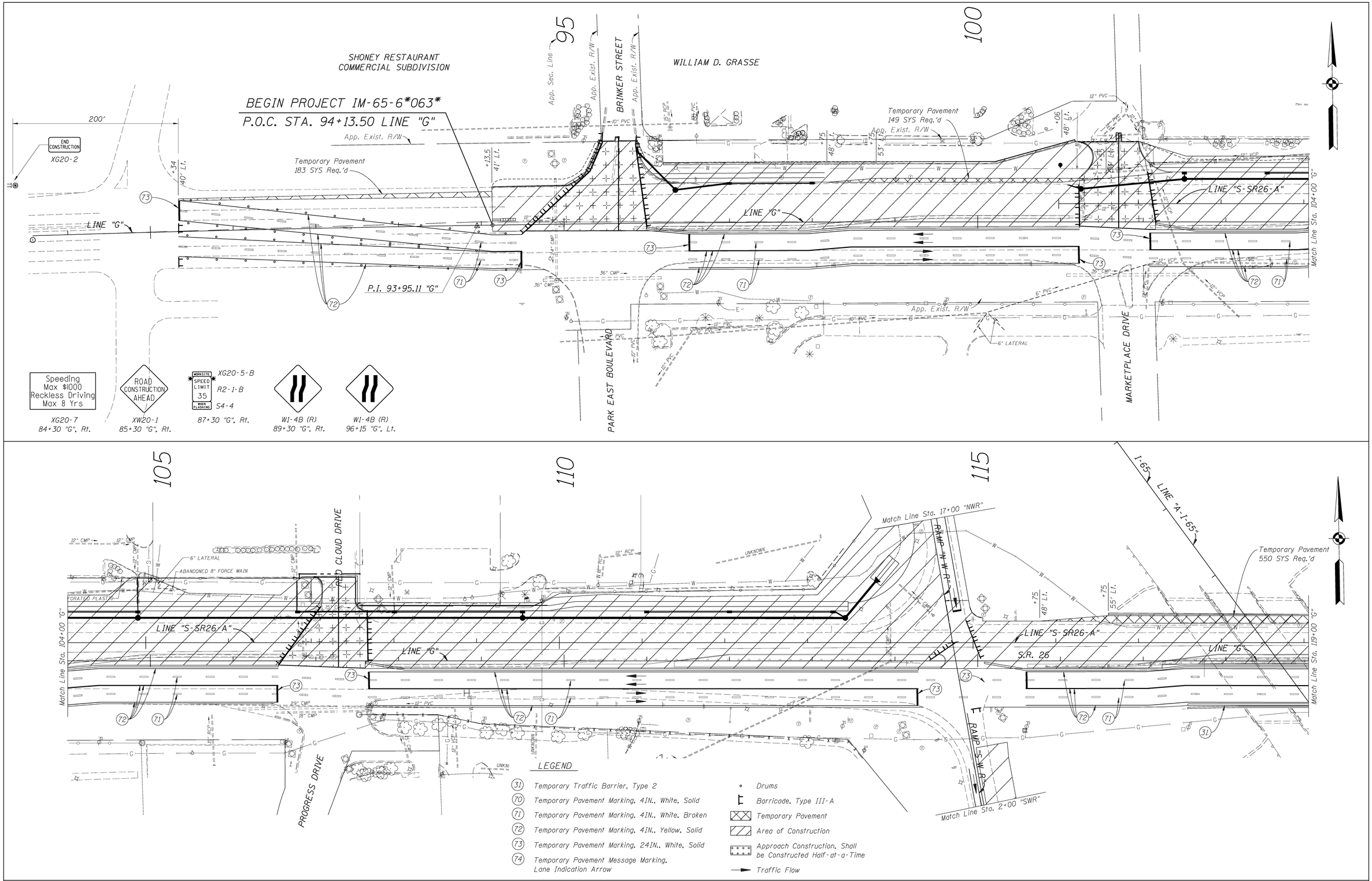

LEGEND

- (31) Temporary Traffic Barrier, Type 2
- (70) Temporary Pavement Marking, 4IN., White, Solid
- (71) Temporary Pavement Marking, 4IN., White, Broken
- (72) Temporary Pavement Marking, 4IN., Yellow, Solid
- (73) Temporary Pavement Marking, 24IN., White, Solid
- (74) Temporary Pavement Message Marking, Lane Indication Arrow

- Drums
- Barricade, Type III-A
- Temporary Pavement
- Area of Construction
- Approach Construction, Shall be Constructed Half-at-a-Time
- Traffic Flow

JEFFREY E. LAZELL
REGISTERED
No. 860163
STATE OF INDIANA
PROFESSIONAL ENGINEER

RECOMMENDED FOR APPROVAL — DESIGN ENGINEER — 2-15-08 — DATE

DESIGNED: MAB | DRAWN: MHF
CHECKED: JEL | CHECKED: MAB

INDIANA
DEPARTMENT OF TRANSPORTATION

MAINTENANCE OF TRAFFIC
PHASE I

HORIZONTAL SCALE	BRIDGE FILE
1" = 50'-0"	
VERTICAL SCALE	DESIGNATION
	9802780

SURVEY BOOK	SHEETS
17135	16 of 136
CONTRACT	PROJECT
IR-29162	IM-65-6(063)

120 125 130

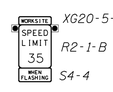

XG20-5-B
R2-1-B
S4-4
138+10 "A", Rt.

XW20-1
140+10 "A", Rt.

XG20-7
141+10 "A", Rt.

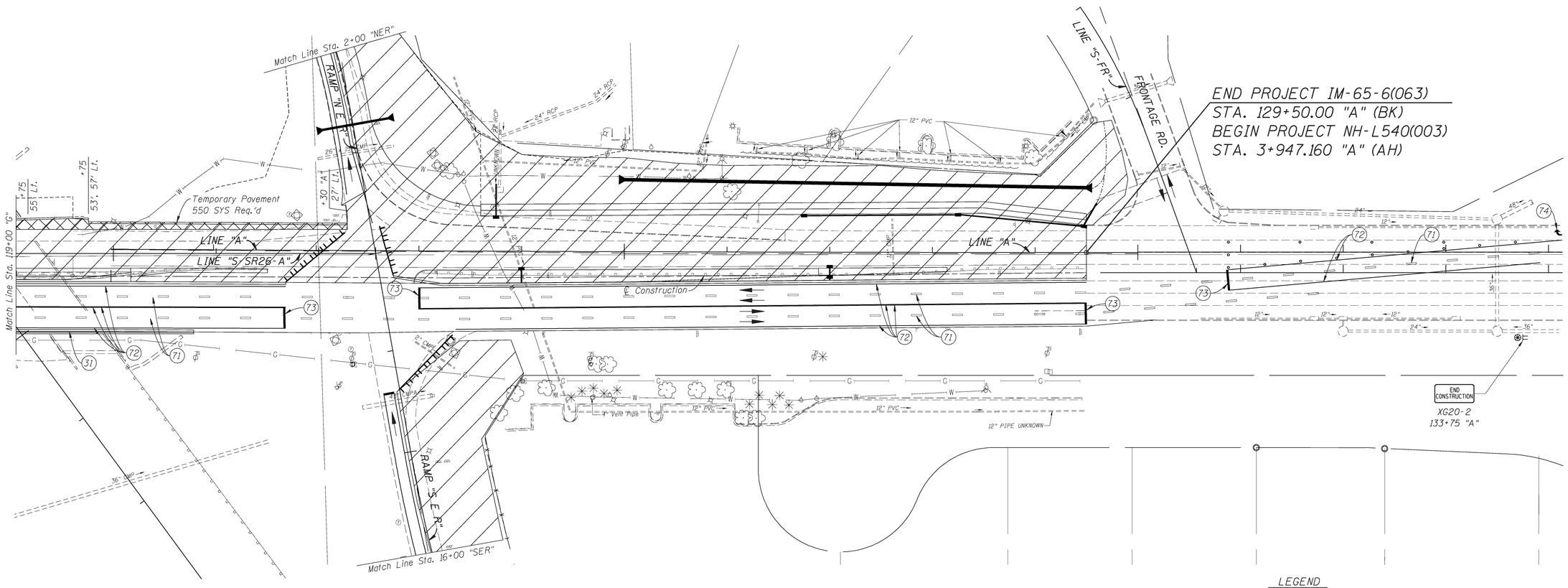

LEGEND

- (31) Temporary Traffic Barrier, Type 2
- (70) Temporary Pavement Marking, 4IN., White, Solid
- (71) Temporary Pavement Marking, 4IN., White, Broken
- (72) Temporary Pavement Marking, 4IN., Yellow, Solid
- (73) Temporary Pavement Marking, 24IN., White, Solid
- (74) Temporary Pavement Message Marking, Lane Indication Arrow
- Drums
- Barricade, Type III-A
- Temporary Pavement
- Area of Construction
- Traffic Flow

JEFFREY E. LAZZELL
REGISTERED
No. 860163
STATE OF INDIANA
PROFESSIONAL ENGINEER

RECOMMENDED FOR APPROVAL — DESIGN ENGINEER — 2-15-08 DATE

DESIGNED: MAB DRAWN: MHF
CHECKED: JEL CHECKED: MAB

INDIANA
DEPARTMENT OF TRANSPORTATION

MAINTENANCE OF TRAFFIC
PHASE I

HORIZONTAL SCALE	BRIDGE FILE
1" = 50'-0"	
VERTICAL SCALE	DESIGNATION
	9802780

SURVEY BOOK	SHEETS
17135	17 of 136
CONTRACT	PROJECT
IR-29162	IM-65-6(063)

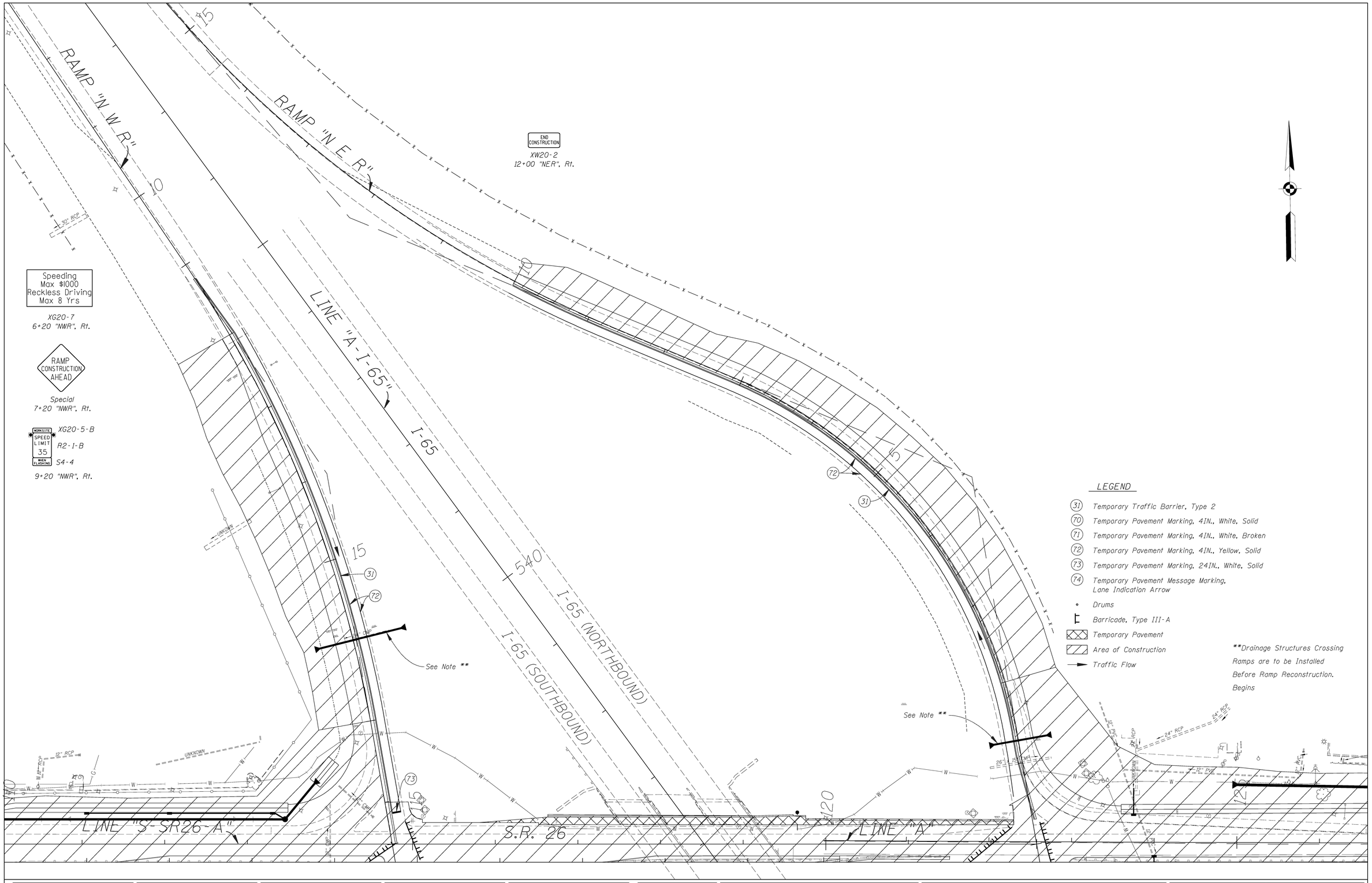

JEFFREY E. LAZZELL
REGISTERED
No. 860163
STATE OF INDIANA
PROFESSIONAL ENGINEER

RECOMMENDED FOR APPROVAL	Jeffrey E. Lazzell	2-15-08	
	DESIGN ENGINEER	DATE	
DESIGNED: MAB	DRAWN: MHF		
CHECKED: JEL	CHECKED: MAB		

INDIANA
DEPARTMENT OF TRANSPORTATION

MAINTENANCE OF TRAFFIC
I-65 & S.R. 26 INTERCHANGE PHASE I

HORIZONTAL SCALE	BRIDGE FILE
1" = 50'-0"	
VERTICAL SCALE	DESIGNATION
	9802780
SURVEY BOOK	SHEETS
17135	18 of 136
CONTRACT	PROJECT
IR-29162	IM-65-6(063)

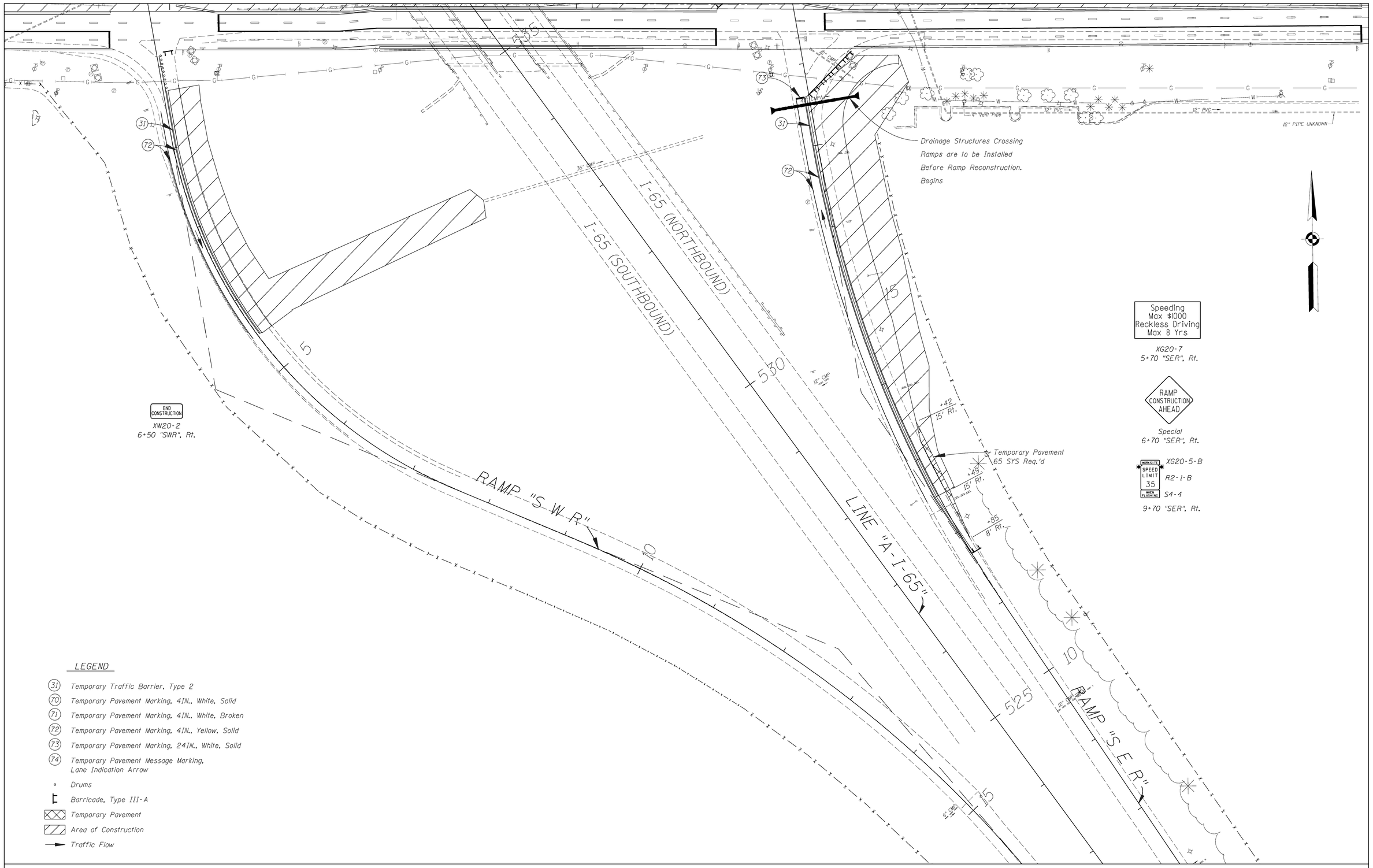

LEGEND

- (31) Temporary Traffic Barrier, Type 2
- (70) Temporary Pavement Marking, 4IN., White, Solid
- (71) Temporary Pavement Marking, 4IN., White, Broken
- (72) Temporary Pavement Marking, 4IN., Yellow, Solid
- (73) Temporary Pavement Marking, 24IN., White, Solid
- (74) Temporary Pavement Message Marking, Lane Indication Arrow
- Drums
- Barricade, Type III-A
- Temporary Pavement
- Area of Construction
- Traffic Flow

JEFFREY E. LAZZELL REGISTERED No. 860163 STATE OF INDIANA PROFESSIONAL ENGINEER

RECOMMENDED FOR APPROVAL — DESIGN ENGINEER — 2-15-08 DATE

DESIGNED: MAB DRAWN: MHF

CHECKED: JEL CHECKED: MAB

INDIANA DEPARTMENT OF TRANSPORTATION

MAINTENANCE OF TRAFFIC I-65 & S.R. 26 INTERCHANGE PHASE I

HORIZONTAL SCALE	BRIDGE FILE
1" = 50'-0"	
VERTICAL SCALE	DESIGNATION
	9802780

SURVEY BOOK	SHEETS
17135	19 of 136
CONTRACT	PROJECT
IR-29162	IM-65-6(063)

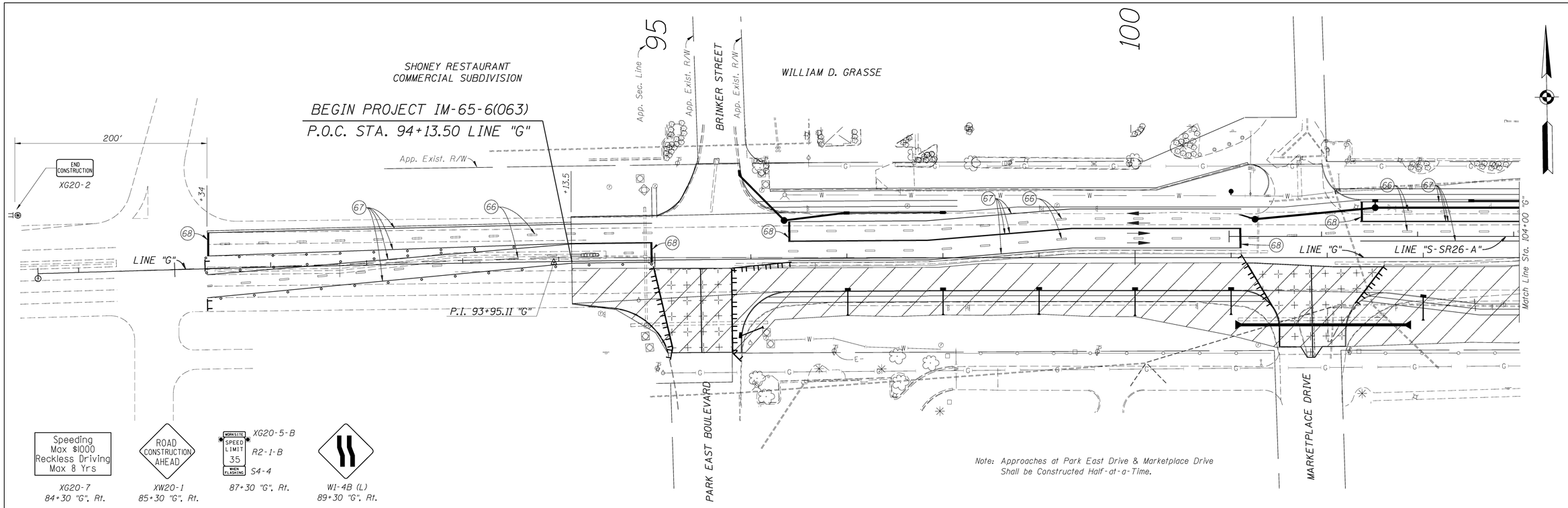

JEFFREY E. LAZZELL
REGISTERED
No. 860163
STATE OF INDIANA
PROFESSIONAL ENGINEER

RECOMMENDED FOR APPROVAL
Jeffrey E. Lazzell 2-15-08
DESIGN ENGINEER DATE

DESIGNED: MAB DRAWN: MHF
CHECKED: JEL CHECKED: MAB

INDIANA
DEPARTMENT OF TRANSPORTATION

MAINTENANCE OF TRAFFIC
PHASE II

HORIZONTAL SCALE	BRIDGE FILE
1" = 50'-0"	
VERTICAL SCALE	DESIGNATION
	9802780

SURVEY BOOK	SHEETS
17135	20 of 136
CONTRACT	PROJECT
IR-29162	IM-65-6(063)

120 125 130

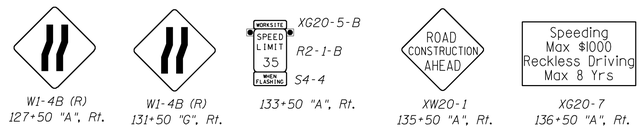

END PROJECT IM-65-6(063)
STA. 129+50.00 "A" (BK)
BEGIN PROJECT NH-L540(003)
STA. 3+947.160 "A" (AH)

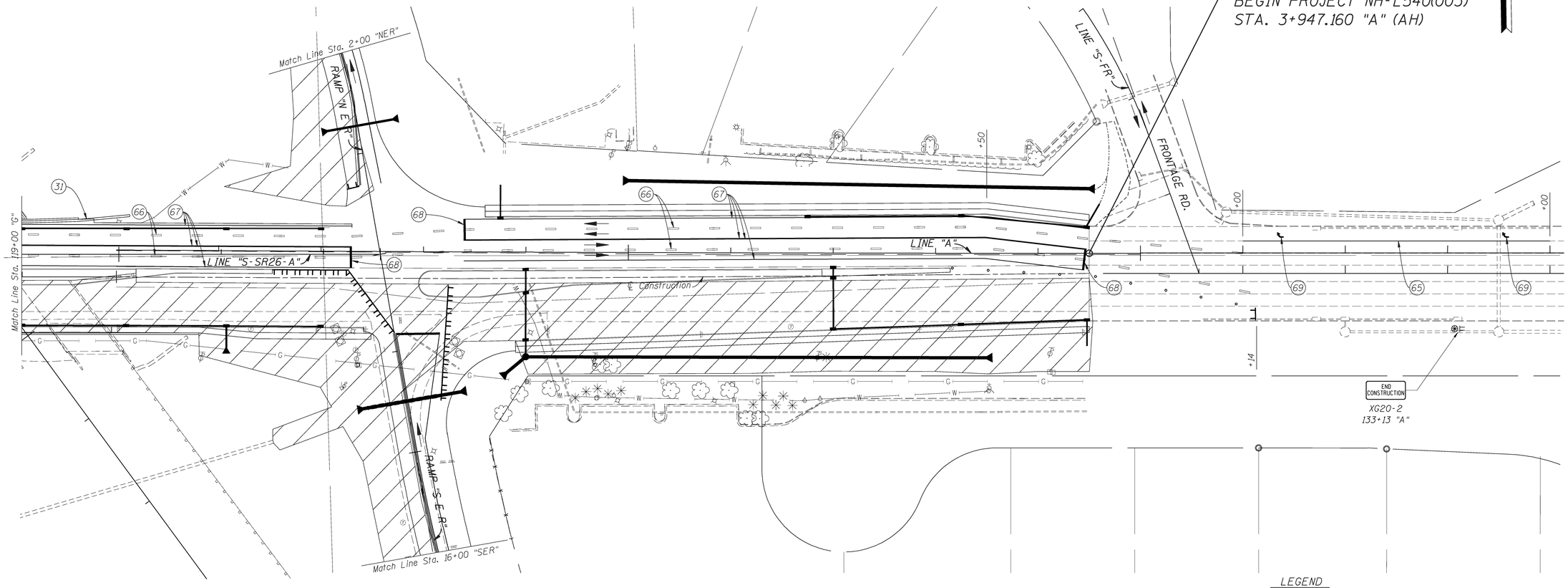

LEGEND

(31) Temporary Traffic Barrier, Type 2
(65) Temporary Pavement Marking, Removable, 4IN., White, Solid
(66) Temporary Pavement Marking, Removable, 4IN., White, Broken
(67) Temporary Pavement Marking, Removable, 4IN., Yellow, Solid
(68) Temporary Pavement Marking, Removable, 24IN., White, Solid
(69) Temporary Pavement Message Marking, Removable, Lane Indication Arrow
Drums
Barricade, Type III-A
Temporary Pavement
Area of Construction
Traffic Flow

JEFFREY E. LAZZELL REGISTERED No. 860163 STATE OF INDIANA PROFESSIONAL ENGINEER

RECOMMENDED FOR APPROVAL — DESIGN ENGINEER — 2-15-08 DATE

DESIGNED: MAB DRAWN: MHF
CHECKED: JEL CHECKED: MAB

INDIANA DEPARTMENT OF TRANSPORTATION

MAINTENANCE OF TRAFFIC PHASE II

HORIZONTAL SCALE	BRIDGE FILE
1" = 50'-0"	
VERTICAL SCALE	DESIGNATION
	9802780

SURVEY BOOK	SHEETS
17135	21 of 136
CONTRACT	PROJECT
IR-29162	IM-65-6(063)

RAMP "N W R"

RAMP "N E R"

LINE "A-I-65"

I-65

I-65 (NORTHBOUND)

I-65 (SOUTHBOUND)

LINE "S-SR26-A"

S.R. 26

LINE "A"

Speeding
Max $1000
Reckless Driving
Max 8 Yrs

XG20-7
6+20 "NWR", Rt.

RAMP CONSTRUCTION AHEAD

Special
7+20 "NWR", Rt.

WORKSITE SPEED LIMIT 35 WHEN FLASHING

XG20-5-B
R2-1-B
S4-4
9+20 "NWR", Rt.

END CONSTRUCTION

XW20-2
12+00 "NER", Rt.

See Note **

See Note **

**Drainage Structures Crossing Ramps are to be Installed Before Ramp Reconstruction. Begins

LEGEND

- (31) Temporary Traffic Barrier, Type 2
- (65) Temporary Pavement Marking, Removable, 4IN., White, Solid
- (66) Temporary Pavement Marking, Removable, 4IN., White, Broken
- (67) Temporary Pavement Marking, Removable, 4IN., Yellow, Solid
- (68) Temporary Pavement Marking, Removable, 24IN., White, Solid
- (69) Temporary Pavement Message Marking, Removable, Lane Indication Arrow
- Drums
- Barricade, Type III-A
- Temporary Pavement
- Area of Construction
- Traffic Flow

JEFFREY E. LAITELL REGISTERED No. 860163 STATE OF INDIANA PROFESSIONAL ENGINEER

RECOMMENDED FOR APPROVAL — DESIGN ENGINEER — 2-15-08 DATE

DESIGNED: MAB | DRAWN: MHF

CHECKED: JEL | CHECKED: MAB

INDIANA DEPARTMENT OF TRANSPORTATION

MAINTENANCE OF TRAFFIC
I-65 & S.R. 26 INTERCHANGE PHASE II

HORIZONTAL SCALE	BRIDGE FILE
1" = 50'-0"	
VERTICAL SCALE	DESIGNATION
	9802780

SURVEY BOOK	SHEETS
17135	22 of 136
CONTRACT	PROJECT
IR-29162	IM-65-6(063)

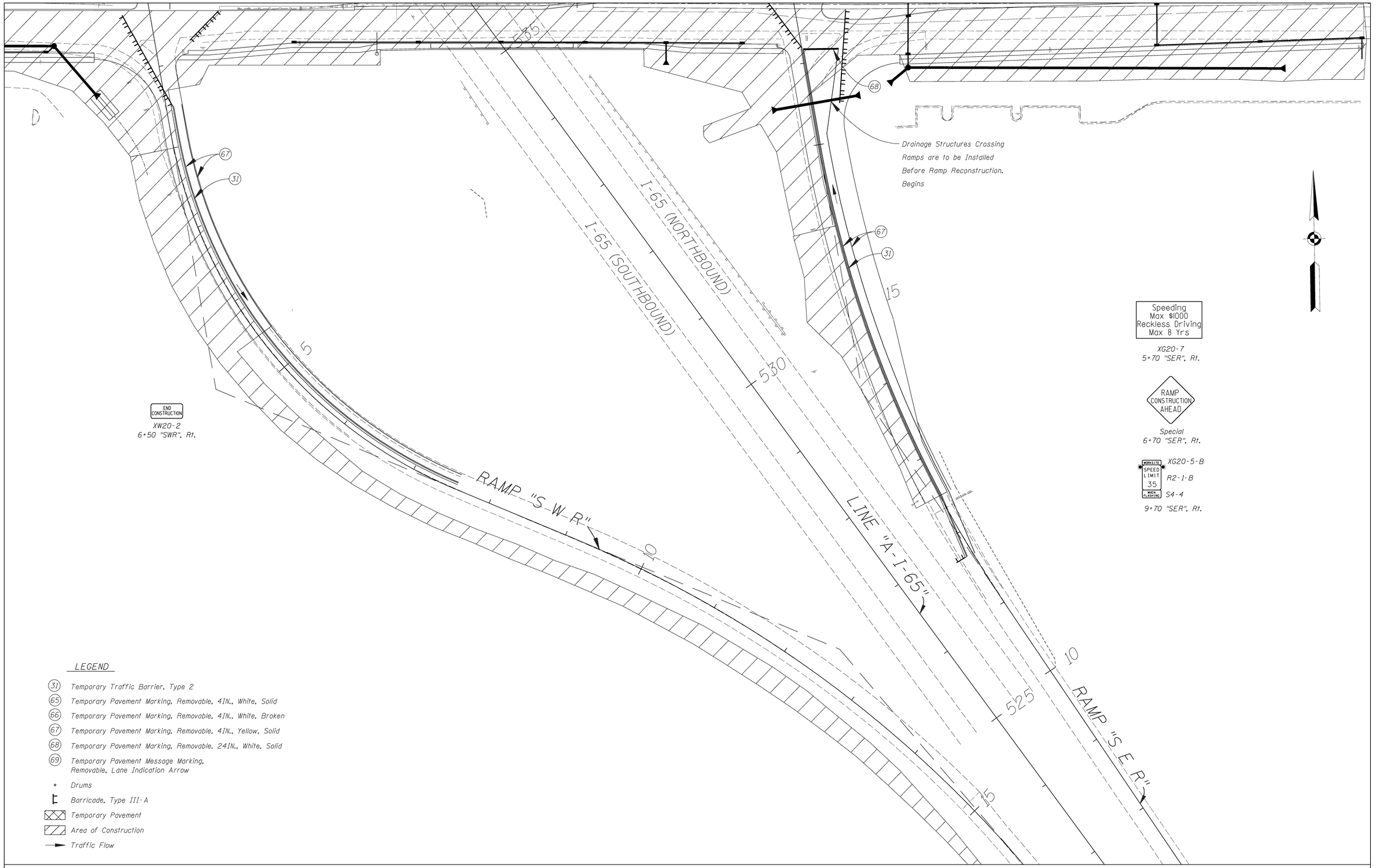

JEFFREY E. LAZZELL REGISTERED No. 860163 STATE OF INDIANA PROFESSIONAL ENGINEER

RECOMMENDED FOR APPROVAL — DESIGN ENGINEER — DATE 2-15-08

DESIGNED: MAB | DRAWN: MHF

CHECKED: JEL | CHECKED: MAB

INDIANA DEPARTMENT OF TRANSPORTATION

MAINTENANCE OF TRAFFIC I-65 & S.R. 26 INTERCHANGE PHASE II

HORIZONTAL SCALE	BRIDGE FILE
1" = 50'-0"	
VERTICAL SCALE	DESIGNATION
	9802780
SURVEY BOOK	SHEETS
17135	23 of 136
CONTRACT	PROJECT
IR-29162	IM-65-6(063)

SHONEY RESTAURANT
COMMERCIAL SUBDIVISION

App. Sec. Line

App. Exist. R/W

BRINKER STREET

App. Exist. R/W

WILLIAM D. GRASSE

95

100

App. Exist. R/W

END CONSTRUCTION
XG20-2
88+30 "G"

BEGIN PROJECT IM-65-6(063)
P.O.C. STA. 94+13.50 LINE "G"

LINE "G"

P.I. 93+95.11 "G"

Replace Concrete Barrier and Impact Attenuator Removed in Phase I-A

31

LINE "G"

LINE "S-SR26-A"

Match Line Sta. 104+00 "G"

90+30 "G"

WORK SITE
SPEED LIMIT
35
WHEN FLASHING

XG20-5-B
R2-1-B
S4-4

100'
200'
200'

Speeding
Max $1000
Reckless Driving
Max 8 Yrs

XG20-7

ROAD CONSTRUCTION AHEAD

XW20-1

PARK EAST BOULEVARD

MARKETPLACE DRIVE

105

110

115

RED CLOUD DRIVE

12" CMP
12" CMP
12" CMP
6" LATERAL
ABANDONED 8" FORCE MAIN
12" CMP
12" CMP
12" RCP
12" RCP
UNKNOWN

Match Line Sta. 104+00 "G"

LINE "S-SR26-A"
LINE "G"

PROGRESS DRIVE

15" RCP
12" CMP
UNKNOWN

Match Line Sta. 17+00 "NWR"

RAMP "N W R"

I-65
LINE "A-I-65"

31

LINE "S SR26-A"
LINE "G"

Match Line Sta. 119+00 "G"

RAMP "S W R"

Match Line Sta. 2+00 "SWR"

LEGEND

(31) Temporary Concrete Barrier	Traffic Barrel, Reflective
(65) Temporary Pavement Marking, I, 4in., White, Solid	Barricade, Type III-A
(66) Temporary Pavement Marking, I, 4in., White, Broken	Temporary Pavement
(67) Temporary Pavement Marking, I, 4in., Yellow, Solid	Area of Construction
(68) Temporary Pavement Marking, I, 24in., White, Solid	Traffic Flow
(69) Temporary Pavement Message Marking, Removable, Lane Indication Arrow	Flashing Arrow Sign

REGISTERED
JEFFREY E. LAZELL
No. 860163
STATE OF INDIANA
PROFESSIONAL ENGINEER

RECOMMENDED FOR APPROVAL
DESIGN ENGINEER — DATE 1-9-08

DESIGNED: MAB DRAWN: MHF
CHECKED: JEL CHECKED: MAB

INDIANA
DEPARTMENT OF TRANSPORTATION

MAINTENANCE OF TRAFFIC
PHASE III

HORIZONTAL SCALE	BRIDGE FILE
1" = 50'-0"	
VERTICAL SCALE	DESIGNATION
	9802780
SURVEY BOOK	SHEETS
17135	24 of 136
CONTRACT	PROJECT
IR-29162	IM-65-6(063)

120

125

130

END PROJECT IM-65-6(063)
STA. 129+50.00 "A" (BK)
BEGIN PROJECT NH-L540(003)
STA. 3+947.160 "A" (AH)

Match Line Sta. 2+00 "NER"

RAMP "N E R"

LINE "S-FR"

FRONTAGE RD.

ROAD CONSTRUCTION AHEAD
XW20-1

Speeding Max $1000 Reckless Driving Max 8 Yrs
XG20-7

XG20-5-B
R2-1-B
WORK SITE SPEED LIMIT 35 WHEN FLASHING
S4-4

200'
100'
131+50 "A"

LINE "A"

LINE "S-SR26-A"

℄ Construction

Match Line Sta. 19+00 "C"

RAMP "S E R"

Match Line Sta. 16+00 "SER"

END CONSTRUCTION
XG20-2
131+50 "A"

LEGEND

(31) Temporary Concrete Barrier
(32) Energy Absorbing Terminal, CZ, TL-2
(65) Temporary Pavement Marking, I, 4in., White, Solid
(66) Temporary Pavement Marking, I, 4in., White, Broken
(67) Temporary Pavement Marking, I, 4in., Yellow, Solid
(68) Temporary Pavement Marking, I, 24in., White, Solid
(69) Temporary Pavement Message Marking, Removable, Lane Indication Arrow
Traffic Barrel, Reflective
Barricade, Type III-A
Temporary Pavement
Area of Construction
Traffic Flow
Flashing Arrow Sign

JEFFREY E. LAZZELL
REGISTERED
No. 860163
STATE OF INDIANA
PROFESSIONAL ENGINEER

RECOMMENDED FOR APPROVAL
DESIGN ENGINEER — DATE 2-15-08

DESIGNED: MAB | DRAWN: MHF
CHECKED: JEL | CHECKED: MAB

INDIANA DEPARTMENT OF TRANSPORTATION

MAINTENANCE OF TRAFFIC
PHASE III

HORIZONTAL SCALE	BRIDGE FILE
1" = 50'-0"	
VERTICAL SCALE	DESIGNATION
	9802780

SURVEY BOOK	SHEETS
17135	25 of 136
CONTRACT	PROJECT
IR-29162	IM-65-6(063)

Sec. 23-T23N-R4W
Fairfield Township
Tippecanoe County

SHONEY RESTAURANT
COMMERCIAL SUBDIVISION

CURVE DATA
P.I. 93+95.11 "G"
Δ = 01°47'30" Rt.
R = 34374.67'
T = 537.50'
L = 1074.91'
E = 4.20'

BEGIN PROJECT IM-65-6(063)
P.O.C. STA. 94+13.50 LINE "G"

P.C. 88+57.61 "G"
P.I. 93+95.11 "G"
N 89° 05' 38" E
LINE "G"

BRINKER STREET
PARK EAST BOULEVARD
S.R. 26
Sec. Line

Sec. 24-T23N-R4W
Fairfield Township
Tippecanoe County

MADHAV, LLC
WILLIAM D. GRASSE
MWMI
MCDONALD'S CORPORATION
GENERAL MILLS RESTAURANTS
REDTOP PROPERTY, LLC
BEVFORD, LLC
LAFAYETTE HOTEL PARTNERSHIP
MARKETPLACE DRIVE

EQN:
P.T. 99+32.52 "G" (BK)=
99+32.61 "G" (AH)

P.O.T. Sta. 100+97.80 "G"=
P.O.T. Sta. 101+03.50 "S-SR26-A"
22' Lt.

LINE "S-SR26-A"
S 89° 06' 52" E

Sec. 25-T23N-R4W
Fairfield Township
Tippecanoe County

ARBYS RESTAURANT
POLLUTION CONTROL STATION
ELEC. TRANSFORMER BOX
CONTROL PANEL
STEEL TANK 3' HIGH
LAVA ROCK
CHAIN LINK FENCE
LANDSCAPE GRAVEL
6" WOOD RAIL FLUSH
CRASH CUSHION DEVICE
MEDIAN BARRIER WALL
Constr. Limits
App. Exist. R/W

+00 STR. No. 13
+00 STR. No. 14
+00 STR. No. 15
+00 STR. No. 16
+00 STR. No. 17
+00 STR. No. 18
+00 STR. No. 19
+00 STR. No. 20
+00 STR. No. 21
+00 STR. No. 22
+00 STR. No. 23
+00 STR. No. 25
+00 STR. No. 28
+25 STR. No. 24
+25,39' STR. No. 24
+50 STR. No. 26
+50,53' STR. No. 27
+50 STR. No. 29
+89 STR. No. 10
+89 STR. No. 11
+35 STR. No. 12

ALL R/W ON THIS SHEET TO BE AS SHOWN
ALL CALLOUTS DESCRIBED FROM LINE "G" EXCEPT AS SHOWN

Erosion Control Legend
- Temp. Silt Fence
- Temp. Check Dam, Revement Riprap
- Temp. Ditch Inlet Protection
- Temp. Curb Inlet Protection

Sec. 26-T23N-R4W
Fairfield Township
Tippecanoe County

EARTHWORK BALANCE

Common Excavation	=	30,731 CYD
Pavement Removal	=	10,147 CYD
Fill + 25%	=	10,816 CYD
Waste	=	30,063 CYD

TBM 4 - Existing R/R Spike In P.Pole #804-6049 Located On South Side SR 26, 120' +/- East of CL Park East Blvd.& In Front Of Olive Garden, Sta. 96+86.03 "G", Offset 97.16 R
El.= 670.128

BEGIN PROJECT
STA. 94+13.50 LINE "G"
Elev. 668.28

Existing Profile Grade
Proposed Grade
-0.35%
+25 STR. No. 24
125' of 24" Pipe @ 0.35%
Inv. = 661.01
+50 STR. No. 27
235' of 24" Pipe @ 0.35%
Inv. = 660.56
Profile Storm Sewer, Lt.
(Plotted 10' Above Datum)
STR. No. 25
Grade of 4' Bottom Ditch, Rt.
172' of 36" Pipe @ 0.30%
2.60%
0.40%
+50
661.80
+00
660.50
Inv. = 660.48
Inv. = 659.97
EQN:
P.T. 99+32.52 "G" (BK)=
99+32.61 "G" (AH)
EL. = 666.47

680 675 670 665 660 655 650

94 95 96 97 98 99 100 101 102 103 104

JEFFREY E. LAZELL
REGISTERED
No. 860163
STATE OF INDIANA
PROFESSIONAL ENGINEER

RECOMMENDED FOR APPROVAL
Jeffrey E. Lazell 1-9-08
DESIGN ENGINEER DATE

DESIGNED: JEL DRAWN: FJ, BM
CHECKED: DRC CHECKED: JEL

INDIANA
DEPARTMENT OF TRANSPORTATION

PLAN & PROFILE
STA. 95+00 TO STA. 104+00 "G"

HORIZONTAL SCALE	BRIDGE FILE
1" = 50'-0"	
VERTICAL SCALE	DESIGNATION
1" = 5'-0"	9802780
SURVEY BOOK	SHEETS
17135	26 of 136
CONTRACT	PROJECT
IR-29162	IM-65-6(063)

HORIZON PROPERTIES I, LLC

Temp. R/W for Drive Construction

DENNY'S REALTY, INC

Temp. R/W for Sidewalk and Wall Construction

BEFREIT, INC.

Proposed Retaining Wall

SIGNATURE INNS, INC.

Sec. 24-T23N-R4W
Fairfield Township
Tippecanoe County

RED CLOUD DRIVE

I-65 RAMP "N W R"

I-65 LINE "A-I-65"

Erosion Control Legend

- Temp. Silt Fence
- Temp. Check Dam, Revement Riprap
- Temp. Ditch Inlet Protection
- Temp. Curb Inlet Protection

STA 118+53.00 "S-SR26-A" =
STA 535+98.67 I-65 "A"

STA 114+75.31 "S-SR26-A" =
STA 18+51.33 "N W R"
STA 0+00.00 "S W R"

P.T. 17+01.49 RAMP "N W R"

+85 STR. No. 31 | +85 STR. No. 30 | +78 STR. No. 36 | +78 STR. No. 37 | +85.53' STR. No. 32 | +80 STR. No. 45 | +95 STR. No. 41 | +95 STR. No. 42 | +00 STR. No. 50 | +50.53' STR. No. 46 | +25 STR. No. 55 | +00 STR. No. 51 | +40.53' STR. No. 56 | +50 STR. No. 55 | +00 STR. No. 61 | +00 STR. No. 63

Constr. Limits | Retaining Wall No. 2 | Retaining Wall No. 1 | GALVANIZED STEEL GUARD RAIL | CONC. BRIDGE PIER

LINE "S-SR26-A" | LINE "G" | S 89° 06' 52" E | S 09° 06' 52" E | 105+00 | 110+00 | 115+00 | S.R. 26

+00 STR. No. 60 | +40 Proposed Overhead Cantilever Structure | +00 STR. No. 62 | +00 STR. No. 64

STA 114+74.82 "G" =
STA 114+80.52 "S-SR26-A"
22.00' LEFT =
STA. 0+22.34 "SWR"

STA 118+63.49 "G" =
STA 535+71.35 "A"

P.C. 1+82.34 RAMP "S W R"

Note: Removal of Existing Concrete Fence Post Foundations to be Included in Cost of "Clearing R/W".

B BEGIN PROPOSED LIMITED ACCESS RIGHT-OF-WAY

LAFAYETTE HOTEL PARTNERSHIP

KUBER HOSPITALITY, LLC

PROGRESS DRIVE

CHEKER OIL CO. OF INDIANA, INC.

MEEKS REAL ESTATE HOLDINGS, L.L.C.

MOTEL PROPERTY DEVELOPMENT COMPANY, LLC

Sec. 25-T23N-R4W
Fairfield Township
Tippecanoe County

+00 STR. No. 33 | +25 STR. No. 34 | +50 STR. No. 35 | +90 STR. No. 38 | +90.41' STR. No. 39 | +90.41 STR. No. 40 | +90 STR. No. 43 | +00.53' STR. No. 44 | +68 STR. No. 47 | +50 STR. No. 49 | +50.53' STR. No. 48 | +00 STR. No. 52 | +12 STR. No. 53 | +12 STR. No. 54 | +50 STR. No. 57 | +60.53' STR. No. 58

P.O.T. Sta. 109+00.00 "G"

ALL R/W ON THIS SHEET TO BE AS SHOWN
ALL CALLOUTS DESCRIBED FROM LINE "G" EXCEPT AS SHOWN

TBM 5 - Cut "X" In N.W. Bolt On Light Pole No. 79-65-26-32 Second Pole On S.W. Side Southbound Ramp To I-65 West of Ramp "SWR", South Of Alignment
El.= 657.752

TBM 2 - Cut "X" In S.W. Bolt On Cantilever Sign Pole (North I-65) On SR 26 7' +/- West Of The Center Pier For Southbound I-65 Overpass. Sta. 117+73.18 "G", Offset 1.05 R
El.= 661.879

TBM 3 - Cut "X" In N.E. Bolt On Traffic Signal Pole At The S.W. Corner Of SR 26 & Progress Dr Sta. 106+72.20 "G" Offset 111.45 R
El.= 665.462

BM - C-38 Bronze Disk In N.E.Wing Of Southbound Structure Of I-65 Over SR 26
El.= 679.841

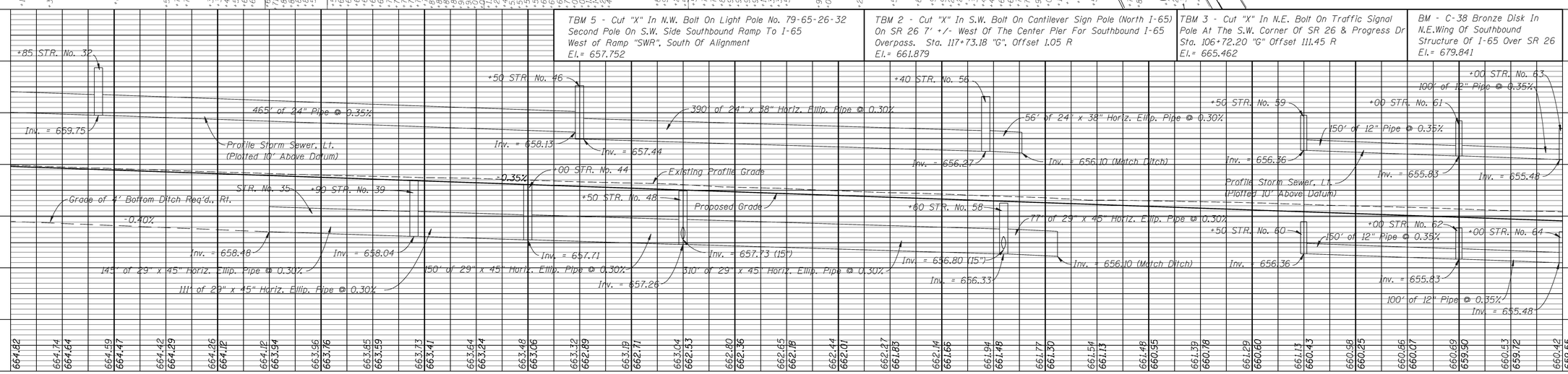

RECOMMENDED FOR APPROVAL — DESIGN ENGINEER — DATE 1-9-08

JEFFREY E. LATTELL — REGISTERED — No. 860163 — STATE OF INDIANA — PROFESSIONAL ENGINEER

DESIGNED: JEL | DRAWN: FJ, BM
CHECKED: DRC | CHECKED: JEL

INDIANA DEPARTMENT OF TRANSPORTATION

PLAN & PROFILE
STA. 104+00 TO STA. 119+00 "G"

HORIZONTAL SCALE	BRIDGE FILE
1" = 50'-0"	
VERTICAL SCALE	DESIGNATION
1" = 5'-0"	9802780
SURVEY BOOK	SHEETS
17135	27 of 136
CONTRACT	PROJECT
IR-29162	IM-65-6(063)

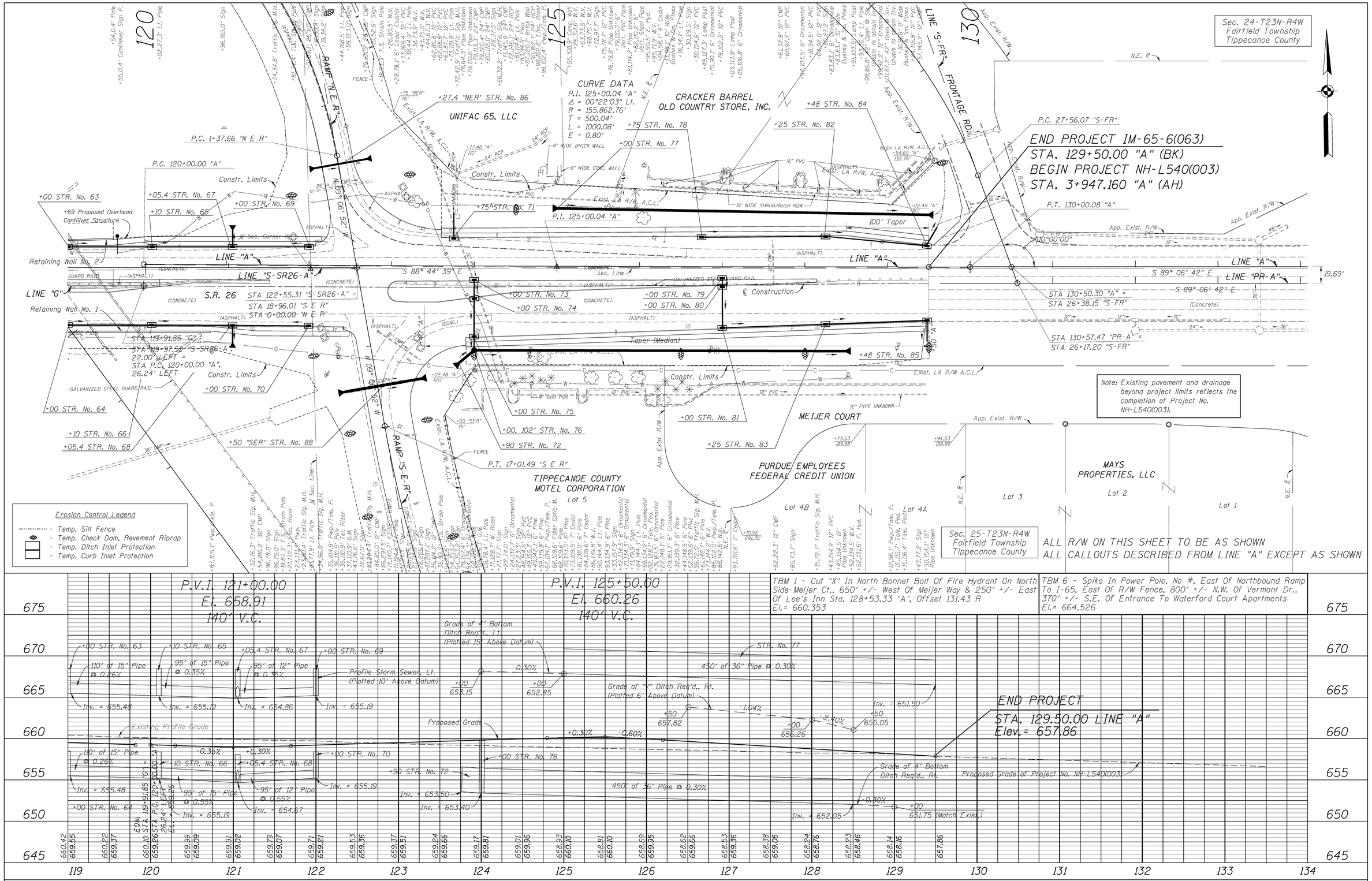

RECOMMENDED FOR APPROVAL	Jeffrey E. Lazzell, DESIGN ENGINEER	2-15-08 DATE	
DESIGNED: JEL	DRAWN: FJ, BM		
CHECKED: DRC	CHECKED: JEL		

JEFFREY E. LAZZELL REGISTERED No. 860163 STATE OF INDIANA PROFESSIONAL ENGINEER

INDIANA
DEPARTMENT OF TRANSPORTATION

PLAN & PROFILE
STA. 120+00 TO STA. 134+00 "A"

HORIZONTAL SCALE	BRIDGE FILE
1" = 50'-0"	
VERTICAL SCALE	DESIGNATION
1" = 5'-0"	9802780
SURVEY BOOK	SHEETS
17135	28 of 136
CONTRACT	PROJECT
IR-29162	IM-65-6(063)

0+00 1+00 2+00 3+00 4+00 5+00 6+00 7+00 8+00 9+00 10+00 11+00 12+00 13+00 14+00 15+00

665 660 655 650

P.V.I. 7+00.00
El. 661.54
160' V.C.

END CONSTRUCTION
STA. 10+00.00 LINE "NER"
Elev. 662.74

BEGIN CONSTRUCTION
STA. 0+38.33 LINE "NER"
Elev. 658.61

EP WEST BOUND SR26

P.G. 659.36

Existing Profile Grade

Proposed Grade

-1.30%
-0.72%
+0.68%
+0.68%
+0.40%

Note: See Spot Elevations for Warping S.R. 26 Cross Slope.

P.V.I. 1+50.00
El. 657.80
160' V.C.

Note: See Interchange Drainage Details for Ditch Grades.

659.56 659.21 658.53 659.13 658.20 659.35 658.08 659.52 658.18 659.81 658.48 659.99 658.82 660.21 659.16 660.44 659.50 660.75 659.84 661.00 660.18 661.25 660.52 661.50 660.86 661.75 661.19 661.90 661.48 661.97 661.73 662.09 661.94 662.18 662.14 662.35 662.34 662.45 662.54 662.73 662.74 662.90 663.14 663.18 663.27 663.14 663.01 662.81 662.59 662.24 661.88

0+00 1+00 2+00 3+00 4+00 5+00 6+00 7+00 8+00 9+00 10+00 11+00 12+00 13+00 14+00 15+00

JEFFREY E. LAZZELL
REGISTERED
No. 860163
STATE OF INDIANA
PROFESSIONAL ENGINEER

RECOMMENDED FOR APPROVAL
DESIGN ENGINEER — DATE 1-9-08

DESIGNED: SAF DRAWN: SAF, BM
CHECKED: JEL CHECKED: JEL

INDIANA
DEPARTMENT OF TRANSPORTATION

PROFILE
STA. 0+00.00 TO STA. 15+00.00 "NER"

HORIZONTAL SCALE	BRIDGE FILE
1" = 50'-0"	
VERTICAL SCALE	DESIGNATION
1" = 1'-0"	9802780
SURVEY BOOK	SHEETS
17135	29 of 136
CONTRACT	PROJECT
IR-29162	IM-65-6(063)

7+00 8+00 9+00 10+00 11+00 12+00 13+00 14+00 15+00 16+00 17+00 18+00 19+00

665 660 655 650

P.V.I. 13+50.00
El. 665.71
160' V.C.

BEGIN CONSTRUCTION
STA. 12+00.00 LINE "NWR"
Elev. 665.86

-0.10%

-1.51%

Existing Profile Grade

END CONSTRUCTION
STA. 18+23.87 LINE "NWR"
Elev. 660.35

EP WEST BOUND SR26
Elev. = 660.74

Proposed Grade

-1.77%

-1.91%

+0.50%

Note: See Spot Elevations for Warping S.R. 26 Cross Slope.

P.V.I. 17+00.00
El. 659.73
250' V.C.

Note: See Interchange Drainage Details for Ditch Grades.

661.02 661.43 661.88 662.49 663.13 663.61 664.24 664.86 665.39 665.82 665.86 665.86 665.84 665.81 665.65 665.71 665.29 665.39 664.89 664.81 664.40 664.00 663.82 663.15 663.33 662.29 662.73 661.47 662.21 660.83 661.72 660.42 661.43 660.23 661.47 660.26 661.52

7+00 8+00 9+00 10+00 11+00 12+00 13+00 14+00 15+00 16+00 17+00 18+00 19+00

JEFFREY E. LAZZELL
REGISTERED
No. 860163
STATE OF INDIANA
PROFESSIONAL ENGINEER

RECOMMENDED FOR APPROVAL _____ 1-9-08
DESIGN ENGINEER DATE

DESIGNED: SAF DRAWN: SAF, BM
CHECKED: JEL CHECKED: JEL

INDIANA
DEPARTMENT OF TRANSPORTATION

PROFILE
STA. 7+00.00 TO STA. 18+51.34 "NWR"

HORIZONTAL SCALE	BRIDGE FILE
1" = 50'-0"	
VERTICAL SCALE	DESIGNATION
1" = 1'-0"	9802780
SURVEY BOOK	SHEETS
17135	30 of 136
CONTRACT	PROJECT
IR-29162	IM-65-6(063)

7+00 8+00 9+00 10+00 11+00 12+00 13+00 14+00 15+00 16+00 17+00 18+00 19+00

665 660 655 650

BEGIN CONSTRUCTION
STA. 12+50.00 LINE "SER"
Elev. 665.32

P.V.I. 13+50.00
El. 664.77
160' V.C.

-0.56%
-1.99%

END CONSTRUCTION
STA. 18+25.00 LINE "SER"
Elev. 658.91

Existing Profile Grade

Proposed Grade

-1.99%
-0.99%
-0.99%
+0.30%
+1.50%

EP EAST BOUND SR26
P.G. 659.42
+.59

Note: See Spot Elevations for Warping S.R. 26 Cross Slope.

P.V.I. 15+75.00
El. 660.29
160' V.C.

P.V.I. 17+40.00
El. 658.66
150' V.C.

Note: See Interchange Drainage Details for Ditch Grades.

660.76 661.14 661.53 662.11 662.67 663.27 663.86 664.41 664.94 665.27 665.39 665.32 665.32 665.04 665.00 664.63 664.48 663.98 663.73 663.33 662.78 662.66 661.79 661.95 660.88 661.23 660.14 660.55 659.55 659.99 659.11 659.64 658.87 659.33 658.85 659.36

7+00 8+00 9+00 10+00 11+00 12+00 13+00 14+00 15+00 16+00 17+00 18+00 19+00

JEFFREY E. LAZZELL
REGISTERED
No. 860163
STATE OF INDIANA
PROFESSIONAL ENGINEER

RECOMMENDED FOR APPROVAL
DESIGN ENGINEER — DATE 1-9-08

DESIGNED: SAF DRAWN: SAF, BM
CHECKED: JEL CHECKED: JEL

INDIANA
DEPARTMENT OF TRANSPORTATION

PROFILE
STA. 7+00.00 TO STA. 18+96.01 "SER"

HORIZONTAL SCALE	BRIDGE FILE
1" = 50'-0"	
VERTICAL SCALE	DESIGNATION
1" = 1'-0"	9802780
SURVEY BOOK	SHEETS
17135	31 of 136
CONTRACT	PROJECT
IR-29162	IM-65-6(063)

0+00 1+00 2+00 3+00 4+00 5+00 6+00 7+00 8+00 9+00 10+00 11+00 12+00 13+00 14+00 15+00

665

660

655

650

P.V.I. 3+50.00
El. 661.71
160' V.C.

BEGIN CONSTRUCTION
STA. 0+73.49 LINE "SWR"
Elev. 660.86

END CONSTRUCTION
STA. 4+50.00 LINE "SWR"
Elev. 661.97

P.C. 661.04

EP EAST BOUND SR26

Existing Profile Grade

-0.35%

-0.32%

+0.10%

+0.10%

+0.26%

Proposed Grade

Note: See Spot Elevations for Warping S.R. 26 Cross Slope.

P.V.I. 1+75.00
El. 660.49
160' V.C.

661.54 661.35 661.19 660.77 661.24 660.68 661.45 660.77 661.56 661.01 661.65 661.35 661.75 661.62 661.81 661.83 661.97 661.97 662.07 662.22 662.36 662.47 662.53 662.64 662.59 662.54 662.52 662.58 662.63 662.71 662.86 662.94 662.95 662.83 662.68 662.60 662.44 662.06 661.92

Note: See Interchange Drainage Details for Ditch Grades.

0+00 1+00 2+00 3+00 4+00 5+00 6+00 7+00 8+00 9+00 10+00 11+00 12+00 13+00 14+00 15+00

JEFFREY E. LAZZELL
REGISTERED
No. 860163
STATE OF INDIANA
PROFESSIONAL ENGINEER

RECOMMENDED FOR APPROVAL
Jeffrey E. Lazzell 1-9-08
DESIGN ENGINEER DATE

DESIGNED: SAF DRAWN: SAF, BM
CHECKED: JEL CHECKED: JEL

INDIANA
DEPARTMENT OF TRANSPORTATION

PROFILE
STA. 0+00.00 TO STA. 15+00.00 "SWR"

HORIZONTAL SCALE	BRIDGE FILE
1" = 50'-0"	
VERTICAL SCALE	DESIGNATION
1" = 1'-0"	9802780
SURVEY BOOK	SHEETS
17135	32 of 136
CONTRACT	PROJECT
IR-29162	IM-65-6(063)

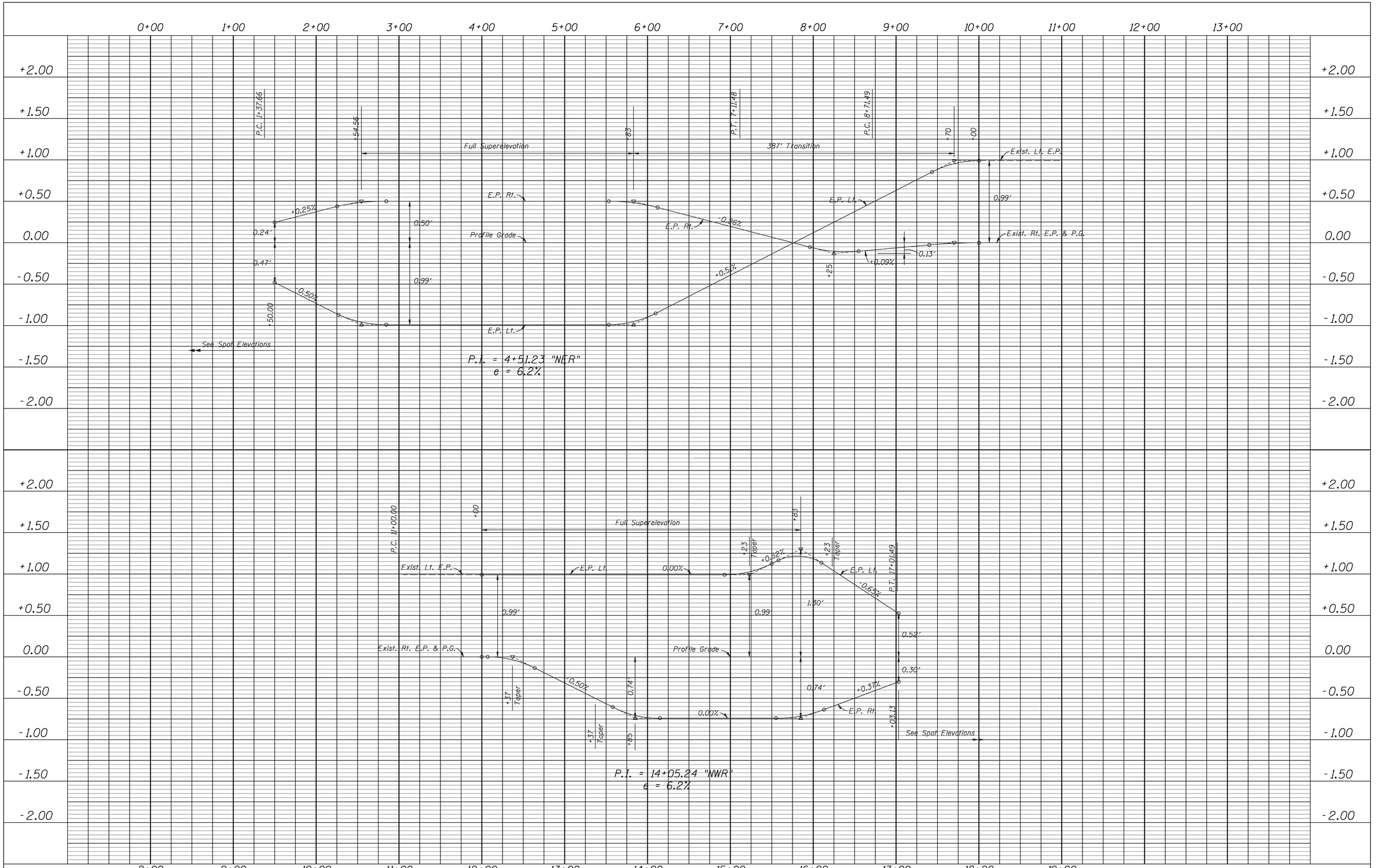

JEFFREY E. LAZZELL
REGISTERED
No. 860163
STATE OF INDIANA
PROFESSIONAL ENGINEER

RECOMMENDED FOR APPROVAL
DESIGN ENGINEER — DATE: 1-9-08

DESIGNED: SAF — DRAWN: FJ
CHECKED: JEL — CHECKED: JEL

INDIANA
DEPARTMENT OF TRANSPORTATION

SUPERELEVATION TRANSITION DETAILS

HORIZONTAL SCALE	BRIDGE FILE
1" = 50'-0"	
VERTICAL SCALE	DESIGNATION
1" = 0.5'	9802780
SURVEY BOOK	SHEETS
17135	33 of 136
CONTRACT	PROJECT
IR-29162	IM-65-6(063)

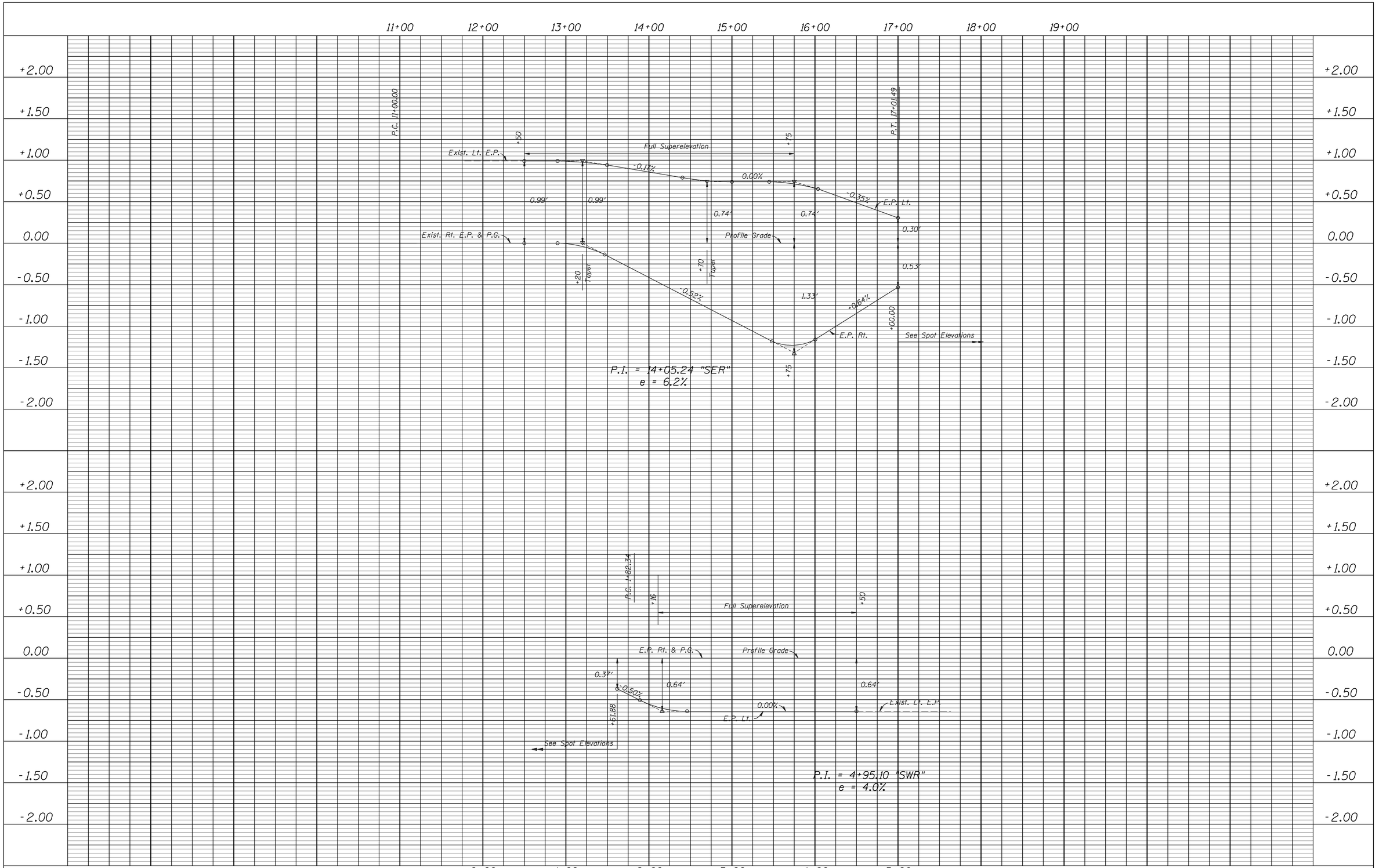

RECOMMENDED FOR APPROVAL
Jeffrey E. Lazzell
DESIGN ENGINEER
1-9-08
DATE

JEFFREY E. LAZZELL
REGISTERED
No. 860163
STATE OF INDIANA
PROFESSIONAL ENGINEER

DESIGNED: SAF
DRAWN: FJ
CHECKED: JEL
CHECKED: JEL

INDIANA
DEPARTMENT OF TRANSPORTATION

SUPERELEVATION TRANSITION DETAILS

HORIZONTAL SCALE	BRIDGE FILE
1" = 50'-0"	
VERTICAL SCALE	DESIGNATION
1" = 0.5'	9802780
SURVEY BOOK	SHEETS
17135	34 of 136
CONTRACT	PROJECT
IR-29162	IM-65-6(063)

SHONEY RESTAURANT
COMMERCIAL SUBDIVISION

(KRISPY KREME)

95+71, LINE "G"
PUBLIC ROAD APPROACH, TYPE D
44.2' WIDE, 53.1' LONG

+35, 40' STR. No. 12
Manhole C-4 &
63' of 12" Pipe Req'd.

BRINKER STREET

+87.6 STR. No. 10
Inlet J-10 &
62' of 12" Pipe Req'd.

+00 STR. No. 13
Inlet M-10 &
100' of 12" Pipe Req'd.

WILLIAM D. GRASSE
(ARBY'S)

ARBYS RESTAURANT

+00 STR. No. 15
Inlet M-10 &
100' of 12" Pipe Req'd.

MADHAV, LLC
(BURGER KING)

BEGIN PROJECT IM-65-6(063)
P.O.C. STA. 94+13.50 LINE "G"

Concrete Barrier
and Crash Attenuator
to be Reinstalled

Constr. Limits

REMOVE ISLAND

P.I. 93+95.11 "G"

CRASH CUSHION DEVICE

N 89° 05' 38" E LINE "G"

NOTE: MATCH INDOT RESURFACING PROJECT

TO REMAIN

Saw Cut

LINE "G"

+87 STR. No. 11
Inlet J-10, 22' of 12"
Pipe & 1 P.E.S. Req'd.

+00 STR. No. 14
Inlet J-10, 24' of 12"
Pipe & 1 P.E.S. Req'd.

+00 STR. No. 16
Inlet J-10, 24' of 12"
Pipe & 1 P.E.S. Req'd.

PARK EAST BOULEVARD

GENERAL MILLS RESTAURANTS
(OLIVE GARDEN)

95+27, LINE "G"
PUBLIC ROAD APPROACH, TYPE D
77.8' WIDE, 58.9' LONG

Erosion Control Legend

- Temp. Silt Fence
- Temp. Check Dam, Revement Riprap
- Temp. Ditch Inlet Protection
- Temp. Curb Inlet Protection

LEGEND

(A) QC/QA PCCP - 14"
(F) Concrete Sidewalk 4"
(D) PCCP for Drives 8"
(P) HMA for Patching 12"
(13) Concrete Curb
(14) Integral Concrete Curb, Type C
(22) Concrete Center Curb, Type C
(26) Sodding (Nursery)

Note:
For Pavement Joints, See
Typical Cross Sections.

JEFFREY E. LAZZELL
REGISTERED
No. 860163
STATE OF INDIANA
PROFESSIONAL ENGINEER

RECOMMENDED FOR APPROVAL — DESIGN ENGINEER — 2-15-08 DATE

DESIGNED: FJ DRAWN: BGM
CHECKED: JEL CHECKED: JEL

INDIANA
DEPARTMENT OF TRANSPORTATION

CONSTRUCTION DETAILS
STA. 95+86 TO STA. 98+00 "G"

HORIZONTAL SCALE	BRIDGE FILE
1" = 20'-0"	
VERTICAL SCALE	DESIGNATION
	9802780

SURVEY BOOK	SHEETS
17135	35 of 136
CONTRACT	PROJECT
IR-29,162	IM-35-6(063)

101+71, LINE "G"
PUBLIC ROAD APPROACH, TYPE D
57' WIDE, 49' LONG

100

(BURGER KING)

MWMI

(KNIGHT'S INN)

MCDONALD'S CORPORATION
(McDONALD'S)

+00 STR. No. 17
Inlet M-10 &
100' of 15" Pipe Req'd.

+00 STR. No. 15
See Previous Sheet

+00 STR. No. 19
Inlet M-10 &
100' of 15" Pipe Req'd.

+00 STR. No. 21
Catch Basin E-7 &
22' of 12" Pipe Req'd.

+00 STR. No. 22
Inlet M-10 &
26' of 15" Pipe Req'd.

+25.41' STR. No. 24
Manhole C-4 &
126' of 24" Pipe Req'd.

+50 STR. No. 26
Inlet J-10 &
6' of 12" Pipe Req'd.

+50.53' STR. No. 27
Manhole C-4 &
235' of 24" Pipe Req'd.

+50 STR. No. 29
Inlet J-10 &
135' of 15" Pipe Req'd.

+00 STR. No. 16
See Previous Sheet

+00 STR. No. 18
Inlet J-10, 24' of 12"
Pipe & 1 P.E.S. Req'd.

+00 STR. No. 20
Inlet J-10, 25' of 12"
Pipe & 1 P.E.S. Req'd.

+00 STR. No. 23
Inlet J-10, 24' of 12"
Pipe & 1 P.E.S. Req'd.

+00 STR. No. 25
172' of 36" Pipe &
2 P.E.S. Req'd.

+00 STR. No. 28
Inlet J-10 &
22' of 12" Pipe Req'd.

EQN:
P.T. 99+32.52 "G" (BK)=
99+32.61 "G" (AH)

P.O.T. Sta. 100+97.80 "G"=
P.O.T. Sta. 101+03.50 "S-SR26-A"
22' Lt.

LINE "G"

LINE "S-SR26-A"
S 89° 06' 52" E

S 89° 06' 52" E

App. Exist. R/W

Constr. Limits

Saw Cut

Remove Islands

R=40'

R=20'

(MULCH)

(ASPHALT)

LANDSCAPE GRAVEL

6" WOOD RAIL FLUSH

STEEL TANK 3' HIGH

ELECTRIC TRANSFORMER BOX CONTROL PANEL

(CONC.)

12" F.M.

12" PVC

12" VCP

15" VCP

36" CMP

15" CMP

12" RCP

6" CMP

6" PVC

10" PVC

6" LATERAL

N.E. R/W

REDTOP PROPERTY, LLC
(RED ROOF INN)

BEVFORD, LLC
(MOUNTAIN JACK'S)

MARKETPLACE DRIVE

LAFAYETTE HOTEL
PARTNERSHIP
(IHOP)
(RAMADA INN)

104+85, LINE "G"
PUBLIC ROAD APPROACH, TYPE A
69.5' WIDE, 59' LONG

LEGEND

- (A) OC/OA PCCP - 14"
- (F) Concrete Sidewalk 4"
- (D) PCCP for Drives 8"
- (P) HMA for Patching 12"
- (13) Concrete Curb
- (14) Integral Concrete Curb, Type C
- (22) Concrete Center Curb, Type C
- (26) Sodding (Nursery)

JEFFREY E. LAZZELL
REGISTERED
No. 860163
STATE OF INDIANA
PROFESSIONAL ENGINEER

RECOMMENDED FOR APPROVAL
DESIGN ENGINEER — DATE 2-15-08

DESIGNED: FJ | DRAWN: BGM
CHECKED: JEL | CHECKED: JEL

INDIANA
DEPARTMENT OF TRANSPORTATION

CONSTRUCTION DETAILS
STA. 98+00 TO STA. 104+00 "G"

HORIZONTAL SCALE	BRIDGE FILE
1" = 20'-0"	
VERTICAL SCALE	DESIGNATION
	9802780

SURVEY BOOK	SHEETS
17135	36 of 136
CONTRACT	PROJECT
IR-29162	IM-65-6(063)

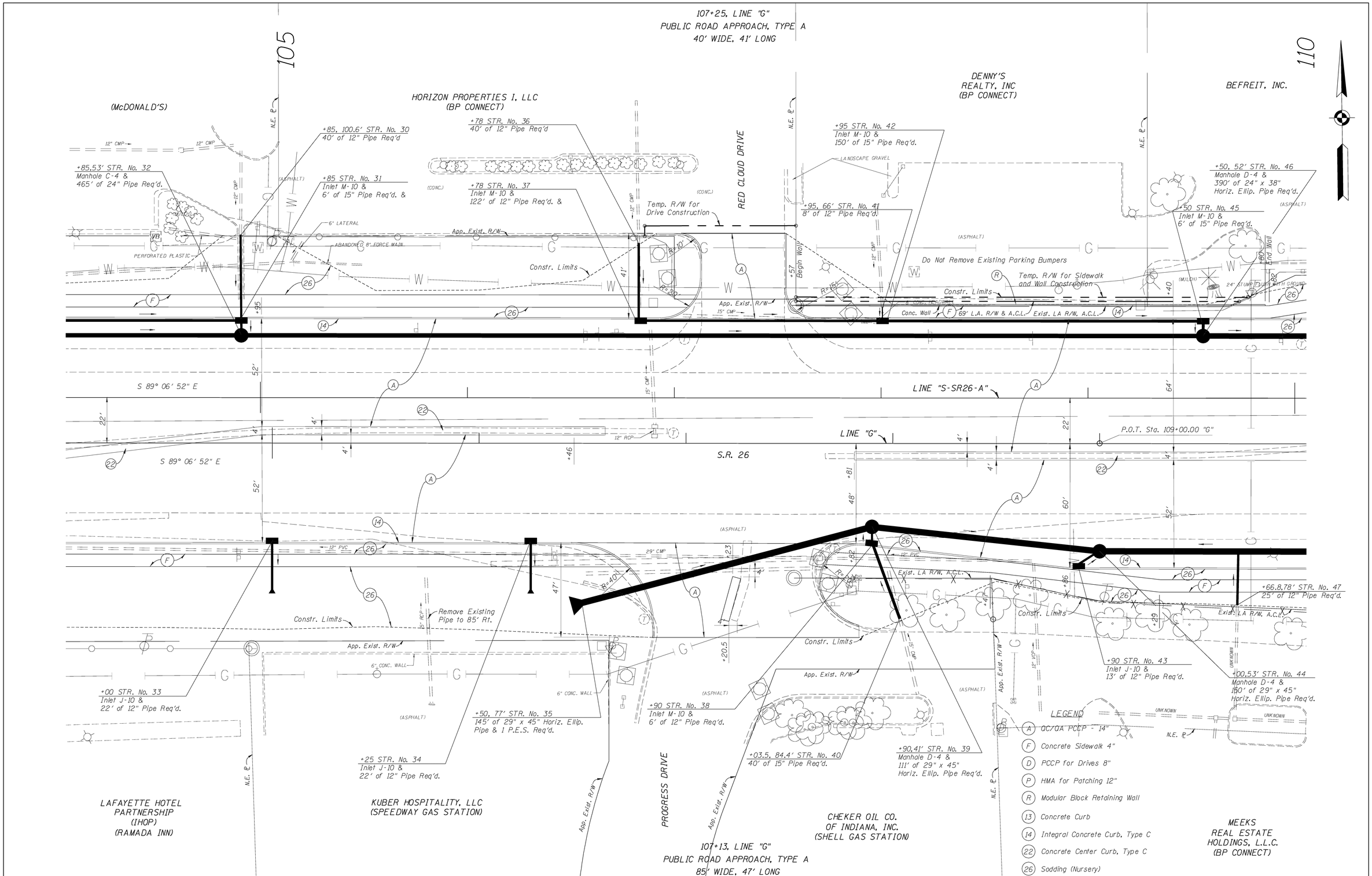

JEFFREY E. LAZZELL
REGISTERED
No. 860163
STATE OF INDIANA
PROFESSIONAL ENGINEER

RECOMMENDED FOR APPROVAL	Jeffrey E. Lazzell	2-15-08	
	DESIGN ENGINEER	DATE	
DESIGNED: FJ	DRAWN: BGM		
CHECKED: JEL	CHECKED: JEL		

INDIANA
DEPARTMENT OF TRANSPORTATION

CONSTRUCTION DETAILS
STA. 104+00 TO STA. 110+00 "G"

HORIZONTAL SCALE 1" = 20'-0"	BRIDGE FILE
VERTICAL SCALE	DESIGNATION 9802780
SURVEY BOOK 17135	SHEETS 37 of 136
CONTRACT IR-29162	PROJECT IM-365-6(063)

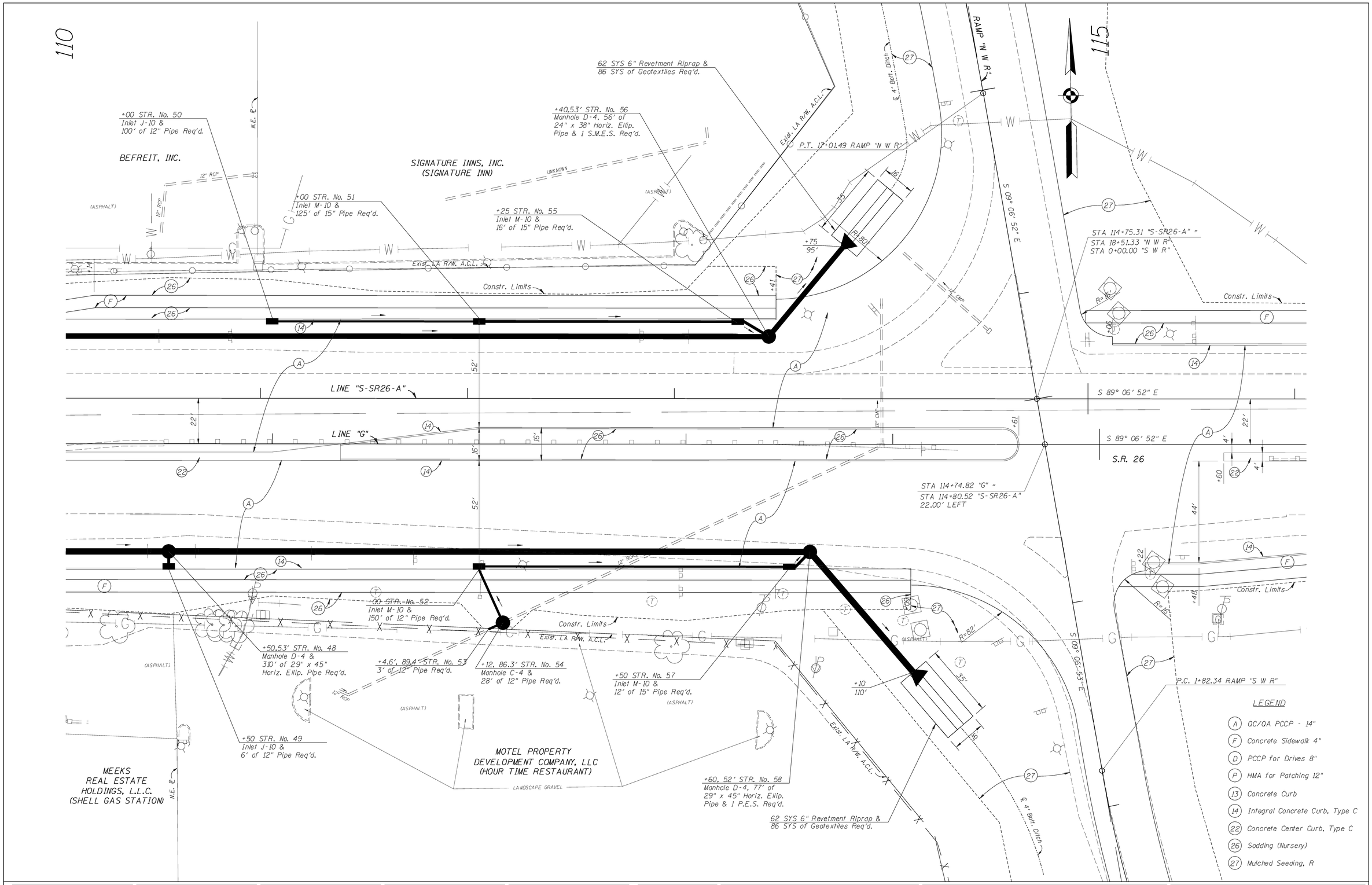

JEFFREY E. LAZZELL
REGISTERED
No. 860163
STATE OF INDIANA
PROFESSIONAL ENGINEER

RECOMMENDED FOR APPROVAL	DESIGN ENGINEER	2-15-08	DATE
DESIGNED: FJ	DRAWN: BGM		
CHECKED: JEL	CHECKED: JEL		

INDIANA
DEPARTMENT OF TRANSPORTATION

CONSTRUCTION DETAILS
STA. 110+00 TO STA. 116+00 "G"

HORIZONTAL SCALE 1" = 20'-0"	BRIDGE FILE
VERTICAL SCALE	DESIGNATION 9802780
SURVEY BOOK 17135	SHEETS 38 of 136
CONTRACT IR-29162	PROJECT IM-65-6(063)

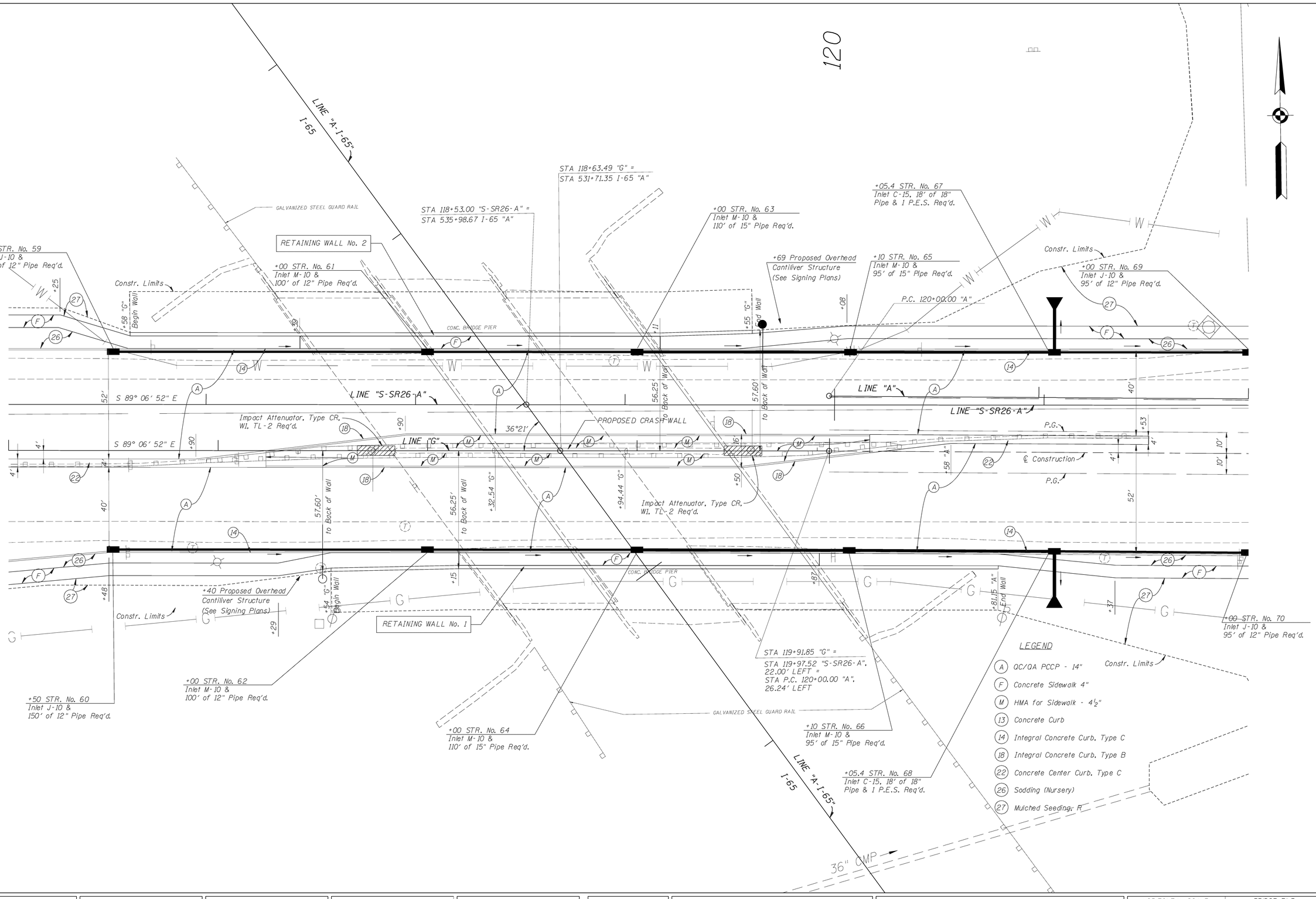

JEFFREY E. LAZELL
REGISTERED
No. 860163
STATE OF INDIANA
PROFESSIONAL ENGINEER

RECOMMENDED FOR APPROVAL — DESIGN ENGINEER — 2-15-08 DATE

DESIGNED: FJ DRAWN: BGM
CHECKED: JEL CHECKED: JEL

INDIANA DEPARTMENT OF TRANSPORTATION

CONSTRUCTION DETAILS
STA. 116+00 "G" TO STA. 122+00 "A"

HORIZONTAL SCALE	BRIDGE FILE
1" = 20'-0"	
VERTICAL SCALE	DESIGNATION
	9802780

SURVEY BOOK	SHEETS
17135	39 of 136
CONTRACT	PROJECT
IR-29162	IM-65-6(063)

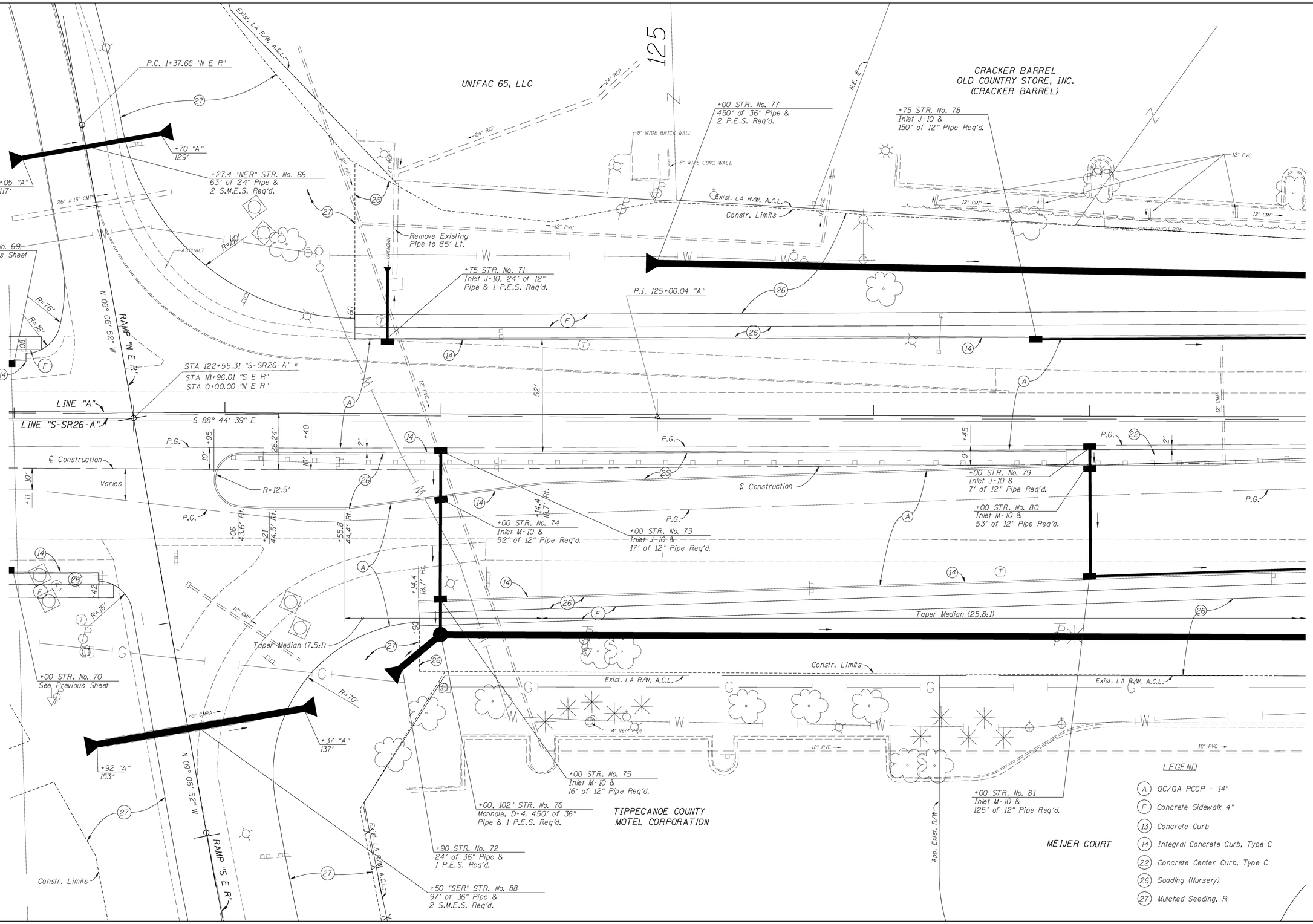

JEFFREY E. LAZZELL
REGISTERED
No. 860163
STATE OF INDIANA
PROFESSIONAL ENGINEER

RECOMMENDED FOR APPROVAL — DESIGN ENGINEER — 2-15-08 DATE

DESIGNED: FJ | DRAWN: BGM
CHECKED: JEL | CHECKED: JEL

INDIANA
DEPARTMENT OF TRANSPORTATION

CONSTRUCTION DETAILS
STA. 122+00 TO STA. 128+00 "A"

HORIZONTAL SCALE	BRIDGE FILE
1" = 20'-0"	
VERTICAL SCALE	DESIGNATION
	9802780

SURVEY BOOK	SHEETS
17135	40 of 136
CONTRACT	PROJECT
IR-29162	IM-65-6(063)

CRACKER BARREL
OLD COUNTRY STORE, INC.
(CRACKER BARREL)

+25 STR. No. 82
Inlet M-10 &
123' of 15" Pipe Req'd.

+48 STR. No. 84
Inlet M-10, 22' of 15"
Pipe & 1 P.E.S. Req'd.

(ASPHALT)

12" PVC

12" CMP

Exist. LA R/W, A.C.L.

℄ Proposed Ditch

Constr. Limits

+50
63'

100' Taper

+50

+60
48'

26

F

14

App. Exist. R/W

FRONTAGE RD.

130

P.C. 27+56.07 "S-FR"

(COMFORT SUITES)

END PROJECT IM-65-6(063)
STA. 129+50.00 "A" (BK)
BEGIN PROJECT NH-L540(003)
STA. 3+947.160 "A" (AH)

Note: Existing Pavement and Drainage Beyond Project Limits Reflects the Completion of Project No. NH-L540(003).

P.T. 130+00.08 "A"

110°00'00"

LINE "A"

S 89° 06' 42" E

LINE "PR-A"

+14.4
End Center Curb

50'

38'

19.69'

8'

22

A

4'

+14.4
18.7' RT.

P.G.

℄ Construction

STA 130+50.30 "A" =
STA 26+38.15 "S-FR"

STA 130+57.47 "PR-A" =
STA 26+17.20 "S-FR"

(Concrete)

+25 STR. No. 83
Inlet M-10 &
123' of 15" Pipe Req'd.

+50
102'

+48 STR. No. 85
Inlet M-10, 24' of 15"
Pipe & 1 P.E.S. Req'd.

Taper Median (25.8:1)

Constr. Limits

Exist. LA R/W, A.C.L.

G

W

12" PIPE UNKNOWN

MEIJER COURT

App. Exist. R/W

LEGEND

(A) QC/QA PCCP - 14"
(F) Concrete Sidewalk 4"
(14) Integral Concrete Curb, Type C
(22) Concrete Center Curb, Type C
(26) Sodding (Nursery)

PURDUE EMPLOYEES
FEDERAL CREDIT UNION

Lot 4A

N.E. ℄

Lot 3

MAYS
PROPERTIES, LLC

Lot 2

Lot 1

JEFFREY E. LAZZELL
REGISTERED
No. 860163
STATE OF INDIANA
PROFESSIONAL ENGINEER

RECOMMENDED FOR APPROVAL
DESIGN ENGINEER — DATE 2-15-08

DESIGNED: FJ | DRAWN: BGM
CHECKED: JEL | CHECKED: JEL

INDIANA
DEPARTMENT OF TRANSPORTATION

CONSTRUCTION DETAILS
STA. 128+00 TO STA. 129+50 "A"

HORIZONTAL SCALE	BRIDGE FILE
1" = 20'-0"	
VERTICAL SCALE	DESIGNATION
	9802780

SURVEY BOOK	SHEETS
17135	41 of 136
CONTRACT	PROJECT
IR-29162	IM-65-6(063)

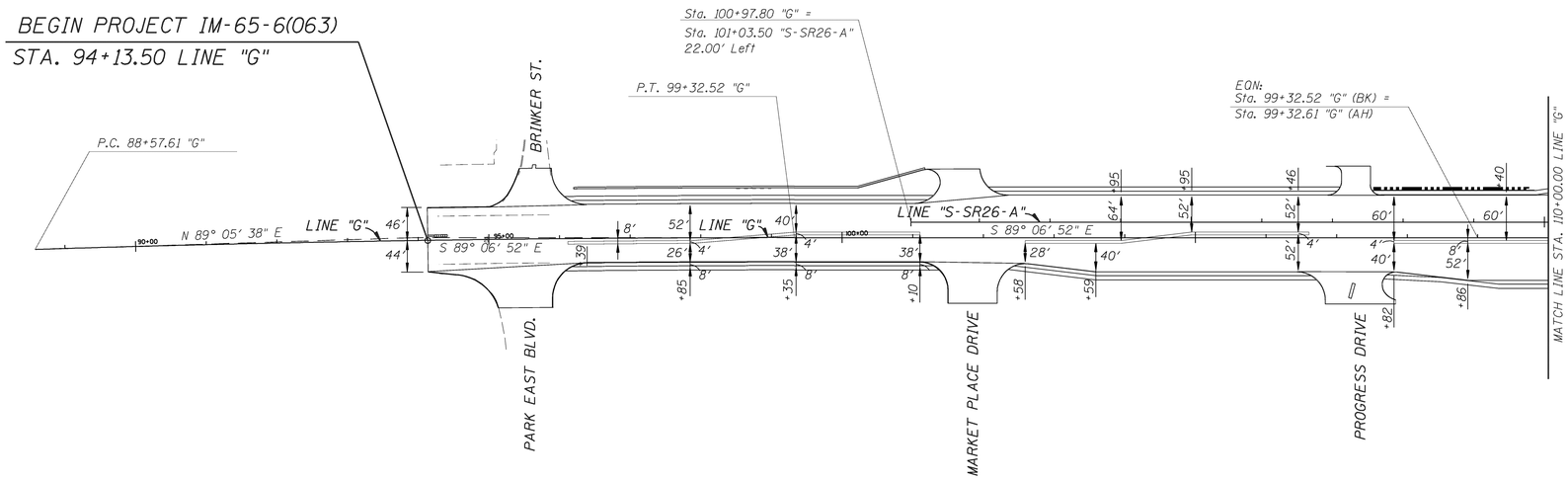

Note: DHV's And Commercial Vehicle Percentages Are Shown As AM/PM.

Ⓐ
ADT 2000: 9,570
ADT 2027: 16,360
DHV 2027: 1,472/1,309
% Comm DHV: 13/14
% Comm ADT: 14/14

Ⓑ
ADT 2000: 11,180
ADT 2027: 19,110
DHV 2027: 1,338/1,529
% Comm DHV: 13/14
% Comm ADT: 15/15

Ⓒ
ADT 2000: 6,470
ADT 2027: 11,060
DHV 2027: 553/774
% Comm DHV: 12/13
% Comm ADT: 13/13

Ⓓ
ADT 2000: 6,480
ADT 2027: 11,070
DHV 2027: 886/775
% Comm DHV: 14/15
% Comm ADT: 15/15

Ⓔ
ADT 2000: 24,620
ADT 2027: 42,070
DHV 2027: 2,104/3,366
% Comm DHV: 12/21
% Comm ADT: 25/25

Ⓕ
ADT 2000: 24,020
ADT 2027: 41,050
DHV 2027: 2,053/2,874
% Comm DHV: 24/22
% Comm ADT: 30/30

Ⓖ
ADT 2000: 19,320
ADT 2027: 33,020
DHV 2027: 1,651/2,311
% Comm DHV: 27/24
% Comm ADT: 34/34

Ⓗ
ADT 2000: 21,520
ADT 2027: 36,780
DHV 2027: 1,471/2,575
% Comm DHV: 12/22
% Comm ADT: 26/26

Ⓘ
ADT 2000: 23,660
ADT 2027: 40,440
DHV 2027: 1,618/3,640
% Comm DHV: 8/8
% Comm ADT: 9/9

Ⓙ
ADT 2000: 20,200
ADT 2027: 34,520
DHV 2027: 3,107/2,071
% Comm DHV: 8/8
% Comm ADT: 9/9

Ⓚ
ADT 2000: 15,360
ADT 2027: 26,250
DHV 2027: 1,050/2,625
% Comm DHV: 6/5
% Comm ADT: 6/6

Ⓛ
ADT 2000: 21,200
ADT 2027: 36,230
DHV 2027: 1,449/3,623
% Comm DHV: 8/8
% Comm ADT: 9/9

Ⓜ
ADT 2000: 21,340
ADT 2027: 36,470
DHV 2027: 3,647/2,188
% Comm DHV: 9/9
% Comm ADT: 10/10

Ⓝ
ADT 2000: 15,050
ADT 2027: 25,720
DHV 2027: 772/1,800
% Comm DHV: 12/26
% Comm ADT: 32/32

Ⓞ
ADT 2000: 12,840
ADT 2027: 21,940
DHV 2027: 658/1,536
% Comm DHV: 34/29
% Comm ADT: 43/43

Ⓟ
ADT 2000: 26,900
ADT 2027: 45,970
DHV 2027: 4,597/3,218
% Comm DHV: 10/10
% Comm ADT: 11/11

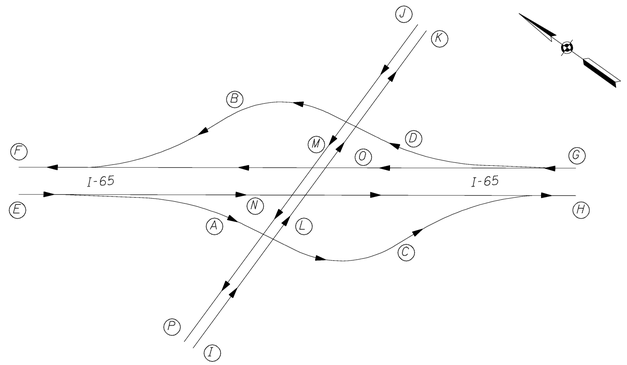

TRAFFIC FLOW DIAGRAM

JEFFREY E. LAZZELL REGISTERED No. 860163 STATE OF INDIANA PROFESSIONAL ENGINEER

RECOMMENDED FOR APPROVAL — DESIGN ENGINEER — 1-9-08 DATE

DESIGNED: JEL DRAWN: FJ
CHECKED: TA CHECKED: JEL

INDIANA DEPARTMENT OF TRANSPORTATION

INTERCHANGE GEOMETRICS
I-65 & S.R. 26 INTERCHANGE

HORIZONTAL SCALE	BRIDGE FILE
1" = 100'-0"	
VERTICAL SCALE	DESIGNATION
	9802780
SURVEY BOOK	SHEETS
17135	42 of 136
CONTRACT	PROJECT
IR-29162	IM-65-6(063)

① P.I. Sta. 4+51.230 "NER"
△ = 57° 22′ 53.0" (Lt)
T = 313.57
R = 572.96
L = 573.82
E = 80.19
e = 6.2%

② P.I. Sta. 12+13.865 "NER"
△ = 26° 53′ 08.0" (Rt)
T = 342.38
R = 1432.40
L = 672.14
E = 40.35
e = 6.2%

③ P.I. Sta. 16+18.654 "NER"
△ = 03° 00′ 00.2" (Rt)
T = 75.02
R = 2864.79
L = 150.00
E = 0.98
e = 4.2%

④ P.I. Sta. 14+05.242 "NWR"
△ = 24° 03′ 34.0" (Rt)
T = 305.24
R = 1432.40
L = 601.49
E = 32.16
e = 6.2%

⑤ P.I. Sta. 14+05.242 "SER"
△ = 24°03′ 34.0" (Rt)
T = 305.24
R = 1432.40
L = 601.49
E = 32.16
e = 6.2%

⑥ P.I. Sta. 4+95.910 "SWR"
△ = 57° 22′ 53.0" (Lt)
T = 313.57
R = 572.96
L = 573.82
E = 80.19
e = 4.0%

⑦ P.I. Sta. 12+58.545 "SWR"
△ = 26° 53′ 08.0" (Rt)
T = 342.38
R = 1432.40
L = 672.14
E = 40.35
e = 6.2%

⑧ P.I. Sta. 16+63.334 "SWR"
△ = 03° 00′ 00.0" (Rt)
T = 75.02
R = 2864.79
L = 150.00
E = 0.98
e = 4.2%

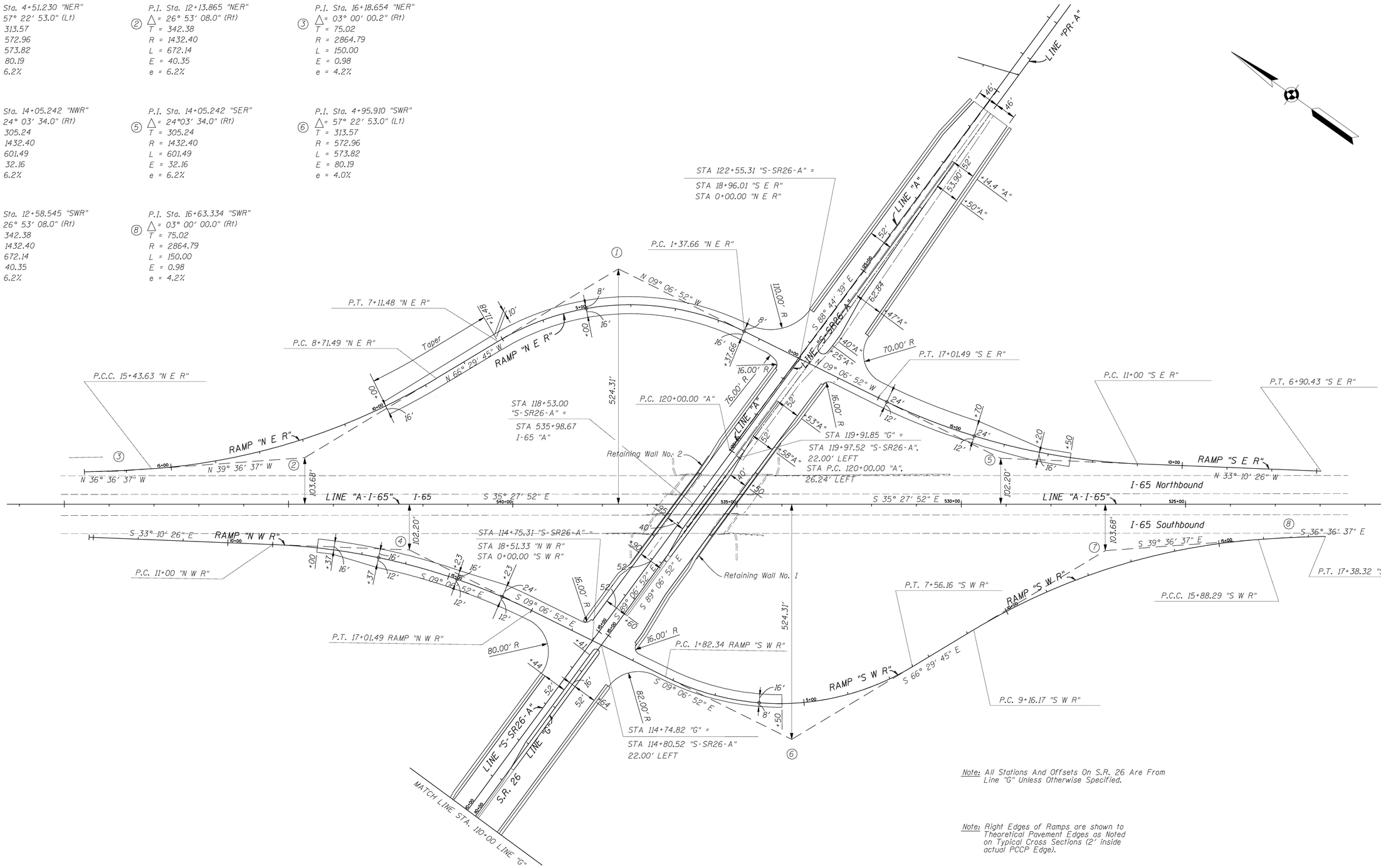

Note: All Stations And Offsets On S.R. 26 Are From Line "G" Unless Otherwise Specified.

Note: Right Edges of Ramps are shown to Theoretical Pavement Edges as Noted on Typical Cross Sections (2′ inside actual PCCP Edge).

JEFFREY E. LAIZELL
REGISTERED
No. 860163
STATE OF INDIANA
PROFESSIONAL ENGINEER

RECOMMENDED FOR APPROVAL
DESIGN ENGINEER — DATE 1-9-08

DESIGNED: SAF | DRAWN: BGM
CHECKED: JEL | CHECKED: JEL

INDIANA DEPARTMENT OF TRANSPORTATION

INTERCHANGE GEOMETRICS
I-65 & S.R. 26 INTERCHANGE

HORIZONTAL SCALE	BRIDGE FILE
1" = 100′-0"	
VERTICAL SCALE	DESIGNATION
	9802780

SURVEY BOOK	SHEETS
17135	43 of 136
CONTRACT	PROJECT
IR-29162	IM-65-6(063)

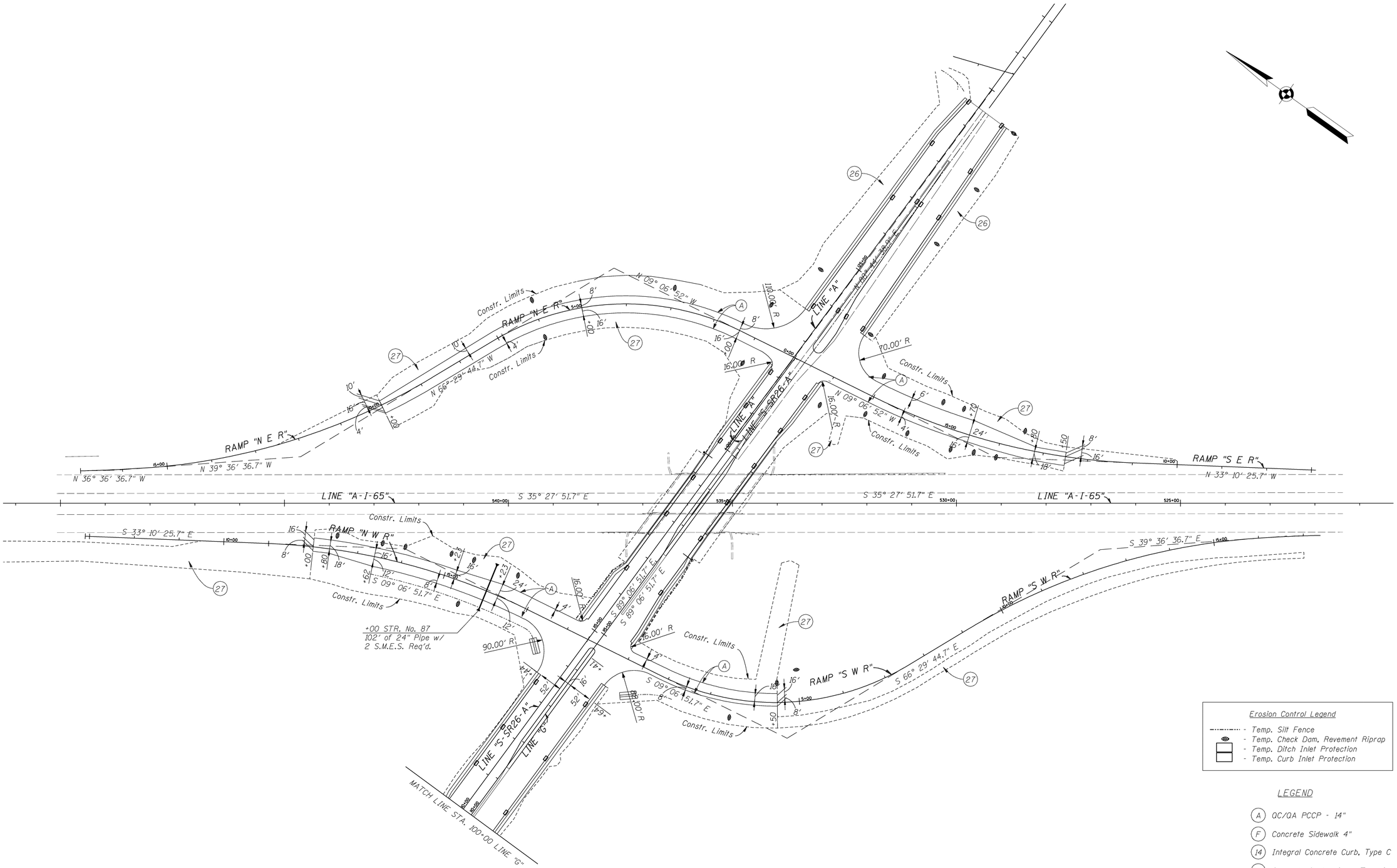

Erosion Control Legend

- Temp. Silt Fence
- Temp. Check Dam, Revement Riprap
- Temp. Ditch Inlet Protection
- Temp. Curb Inlet Protection

LEGEND

- (A) QC/QA PCCP - 14"
- (F) Concrete Sidewalk 4"
- (14) Integral Concrete Curb, Type C
- (22) Concrete Center Curb, Type C
- (26) Sodding (Nursery)
- (27) Mulched Seeding, R

JEFFREY E. LATZELL
REGISTERED
No. 860163
STATE OF INDIANA
PROFESSIONAL ENGINEER

RECOMMENDED FOR APPROVAL _____ DESIGN ENGINEER — 1-9-08 DATE

DESIGNED: SAF	DRAWN: BGM
CHECKED: JEL	CHECKED: JEL

INDIANA
DEPARTMENT OF TRANSPORTATION

INTERCHANGE CONSTRUCTION DETAILS
I-65 & S.R. 26 INTERCHANGE

HORIZONTAL SCALE	BRIDGE FILE
1" = 100'-0"	
VERTICAL SCALE	DESIGNATION
	9802780

SURVEY BOOK	SHEETS
17135	44 of 136
CONTRACT	PROJECT
IR-29162	IM-65-6(063)

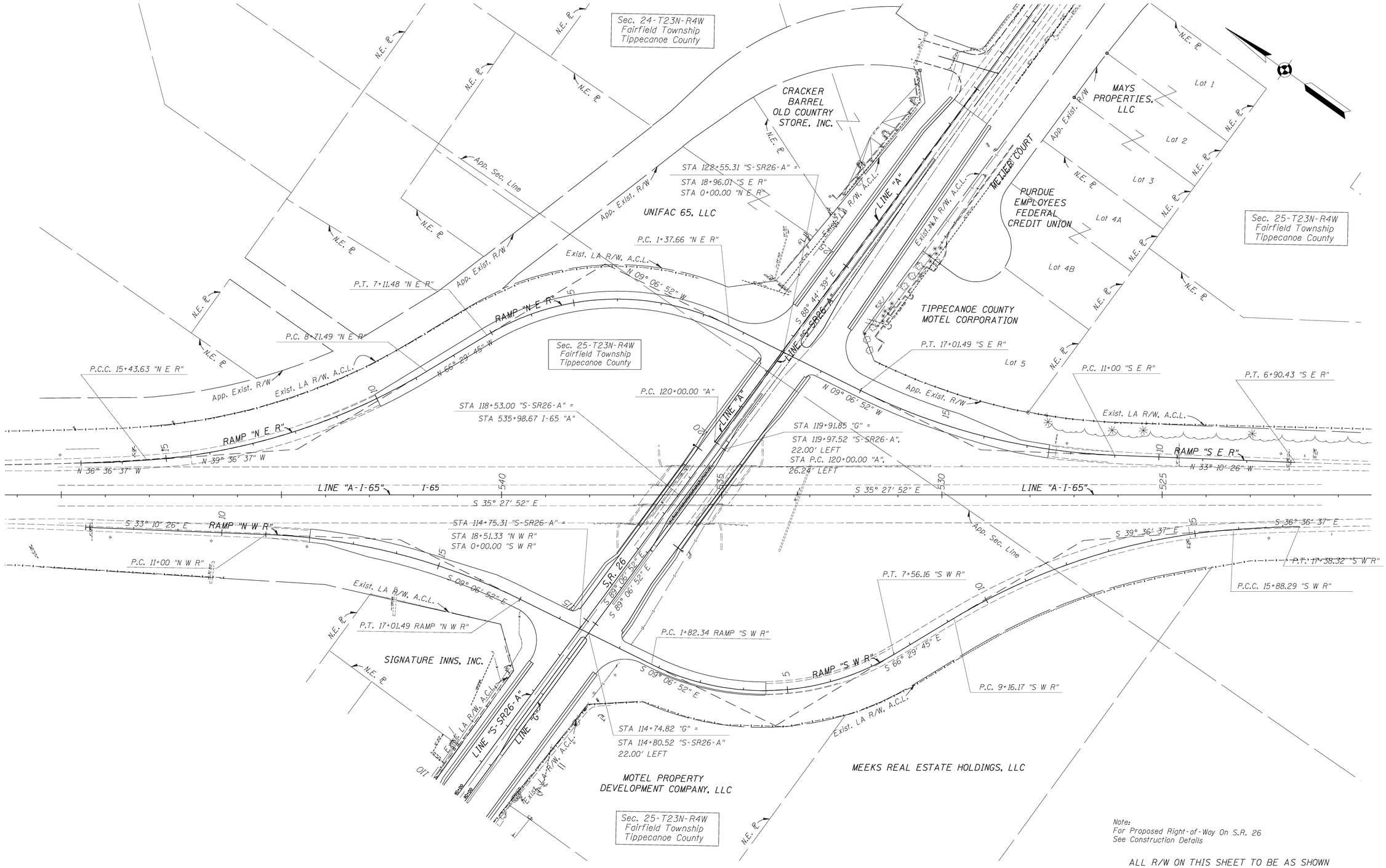

REGISTERED
JEFFREY E. LAZZELL
No. 860163
STATE OF INDIANA
PROFESSIONAL ENGINEER

RECOMMENDED FOR APPROVAL
DESIGN ENGINEER — DATE 1-9-08

DESIGNED: SAF — DRAWN: BGM
CHECKED: JEL — CHECKED: JEL

INDIANA
DEPARTMENT OF TRANSPORTATION

INTERCHANGE RIGHT-OF-WAY
I-65 & S.R. 26 INTERCHANGE

HORIZONTAL SCALE	BRIDGE FILE
1" = 100'-0"	
VERTICAL SCALE	DESIGNATION
	9802780
SURVEY BOOK	SHEETS
17135	45 of 136
CONTRACT	PROJECT
IR-29162	IM-65-6(063)

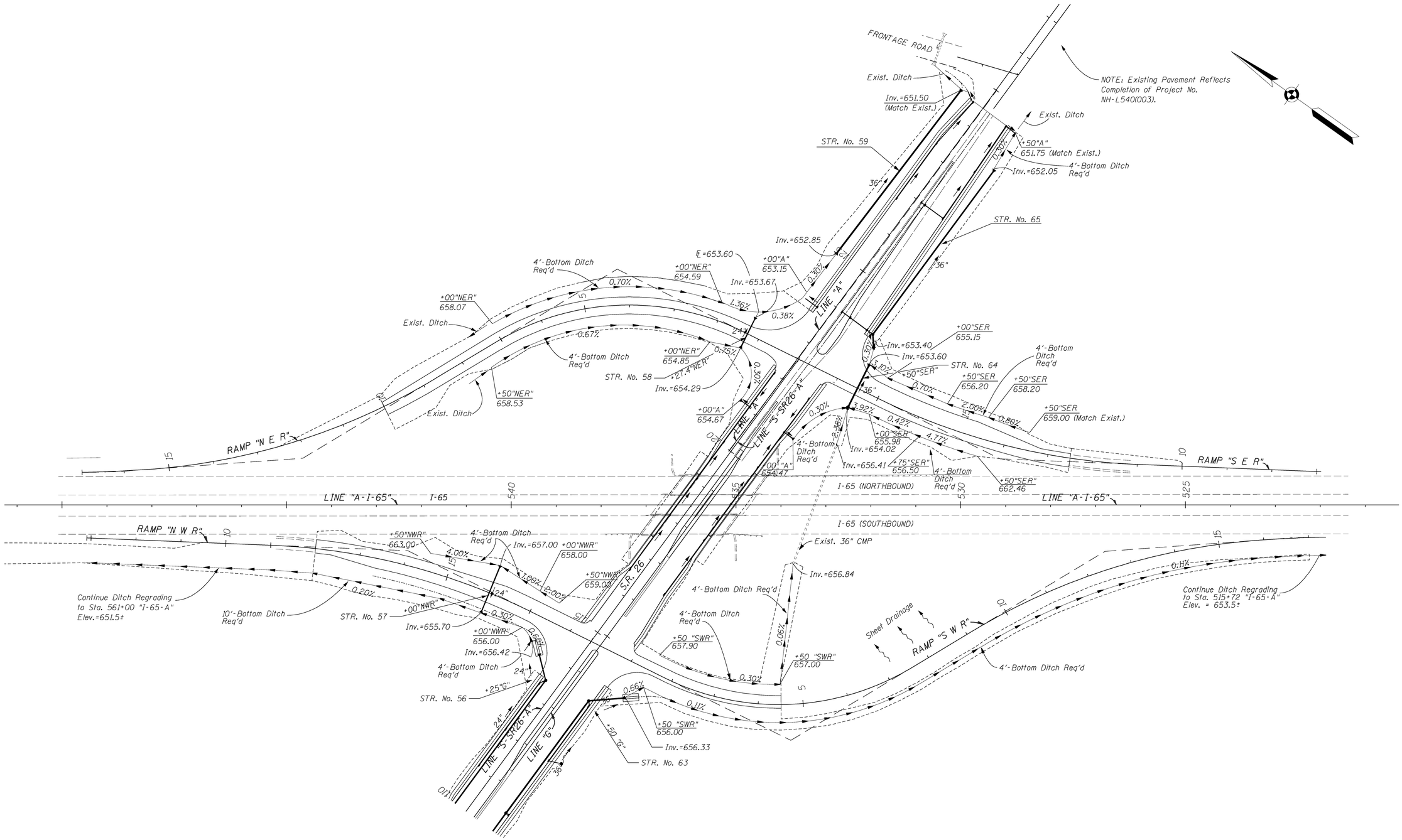

Note:
For Proposed Drainage On S.R. 26
See Construction Details

JEFFREY E. LAZZELL
REGISTERED
No. 860163
STATE OF INDIANA
PROFESSIONAL ENGINEER

RECOMMENDED FOR APPROVAL
DESIGN ENGINEER — DATE 1-9-08

DESIGNED: SAF — DRAWN: SAF
CHECKED: JEL — CHECKED: JEL

INDIANA DEPARTMENT OF TRANSPORTATION

INTERCHANGE DRAINAGE
I-65 & S.R. 26 INTERCHANGE

HORIZONTAL SCALE	BRIDGE FILE
1" = 100'-0"	
VERTICAL SCALE	DESIGNATION
	9802780

SURVEY BOOK	SHEETS
17135	46 of 136
CONTRACT	PROJECT
IR-29162	IM-65-6(063)

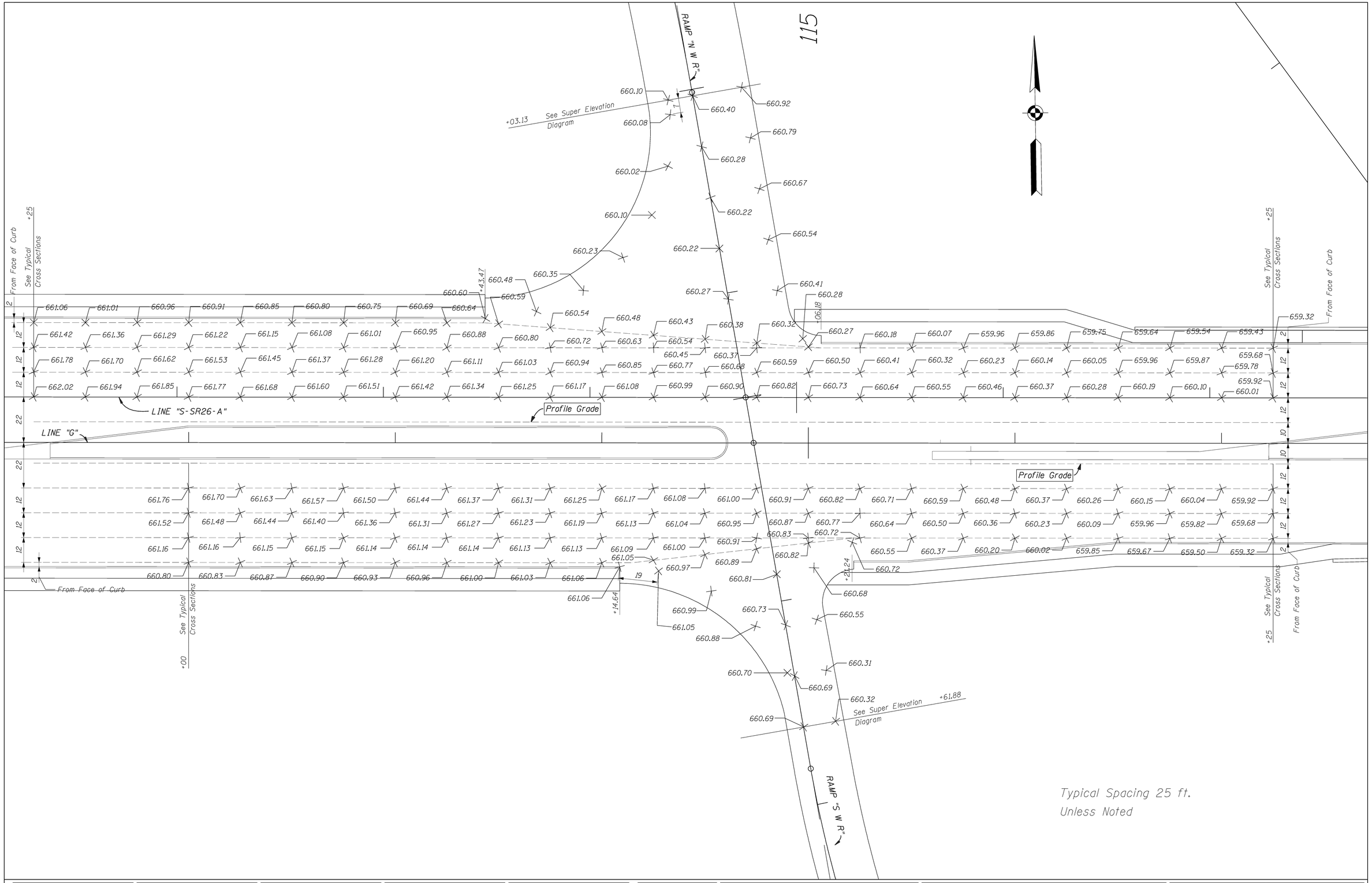

JEFFREY E. LAZZELL REGISTERED No. 860163 STATE OF INDIANA PROFESSIONAL ENGINEER

RECOMMENDED FOR APPROVAL _____ DESIGN ENGINEER — 1-9-08 DATE

DESIGNED: SAF — DRAWN: SAF

CHECKED: JEL — CHECKED: JEL

INDIANA
DEPARTMENT OF TRANSPORTATION

SPOT ELEVATIONS
WEST RAMP TERMINUS
STA. 111+00 TO STA. 117+00 "G"

HORIZONTAL SCALE	BRIDGE FILE
1" = 20'-0"	
VERTICAL SCALE	DESIGNATION
	9802780

SURVEY BOOK	SHEETS
17135	47 of 136
CONTRACT	PROJECT
IR-29162	IM-65-6(063)

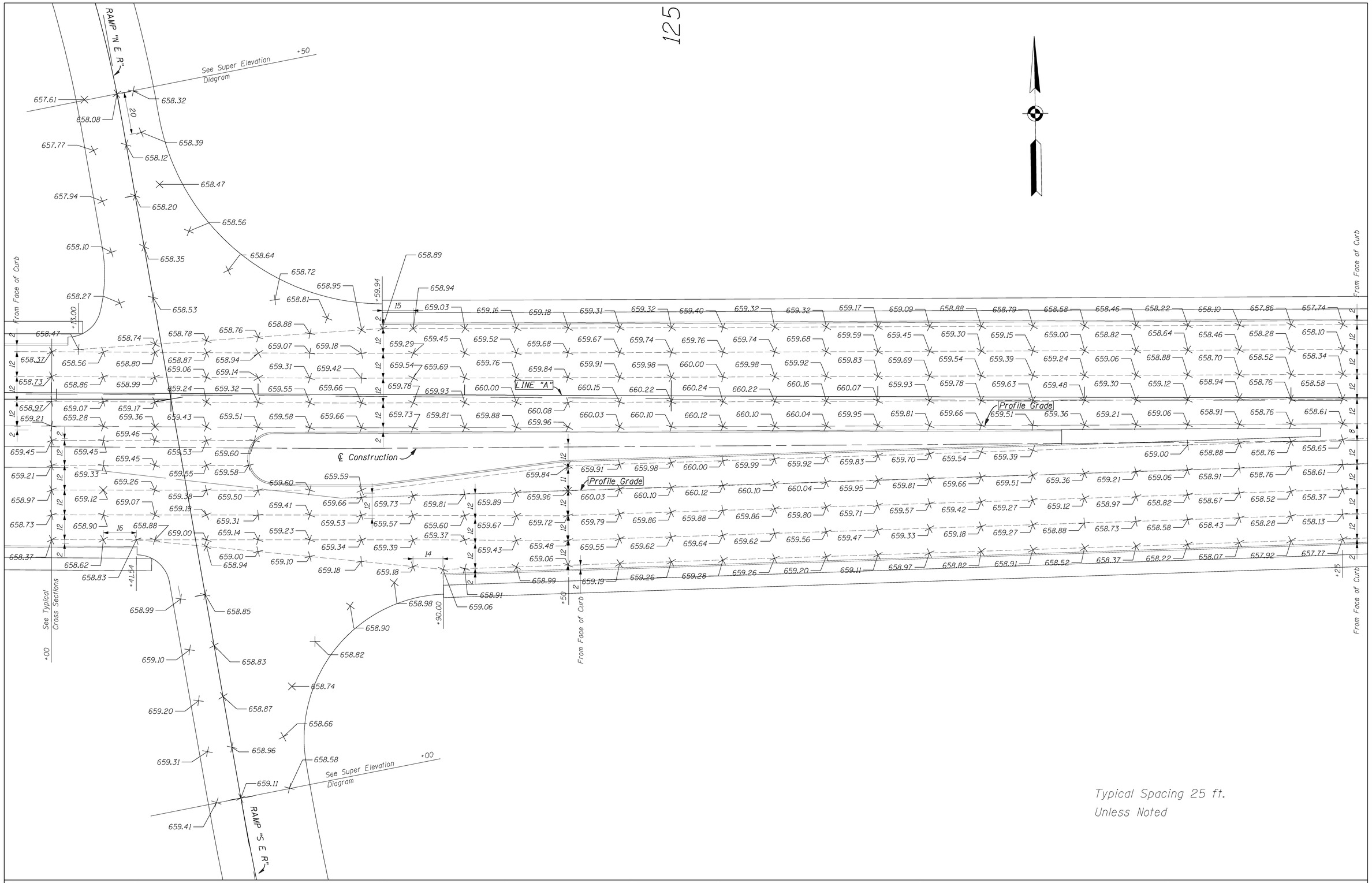

JEFFREY E. LAZZELL REGISTERED No. 860163 STATE OF INDIANA PROFESSIONAL ENGINEER

RECOMMENDED FOR APPROVAL — DESIGN ENGINEER — 2-15-08 — DATE

DESIGNED: SAF	DRAWN: SAF
CHECKED: JEL	CHECKED: JEL

INDIANA
DEPARTMENT OF TRANSPORTATION

SPOT ELEVATIONS
EAST RAMP TERMINUS
STA. 121+75 TO STA. 128+25 "A"

HORIZONTAL SCALE	BRIDGE FILE
1" = 20'-0"	
VERTICAL SCALE	DESIGNATION
	9802780
SURVEY BOOK	SHEETS
17135	48 of 136
CONTRACT	PROJECT
IR-29162	IM-65-6(063)

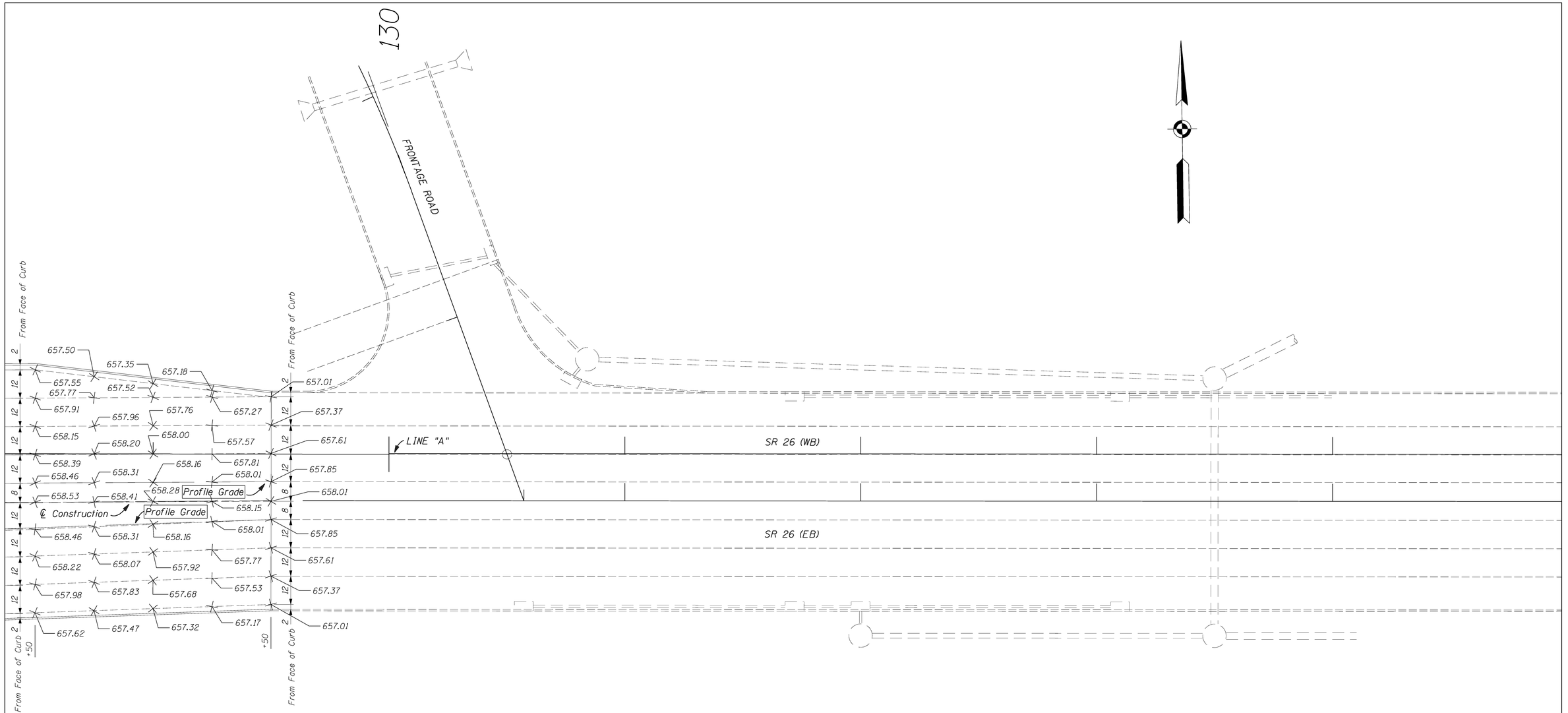

Typical Spacing 25 ft.
Unless Noted

JEFFREY E. LAZZELL
REGISTERED
No. 860163
STATE OF INDIANA
PROFESSIONAL ENGINEER

RECOMMENDED FOR APPROVAL — DESIGN ENGINEER — DATE: 1-9-08

DESIGNED: SAF	DRAWN: SAF
CHECKED: JEL	CHECKED: JEL

INDIANA
DEPARTMENT OF TRANSPORTATION

SPOT ELEVATIONS
EAST RAMP TERMINUS
STA. 128+50 TO STA. 129+50 "A"

HORIZONTAL SCALE	BRIDGE FILE
1" = 20'-0"	
VERTICAL SCALE	DESIGNATION
	9802780
SURVEY BOOK	SHEETS
17135	49 of 136
CONTRACT	PROJECT
IR-29162	IM-65-6(063)

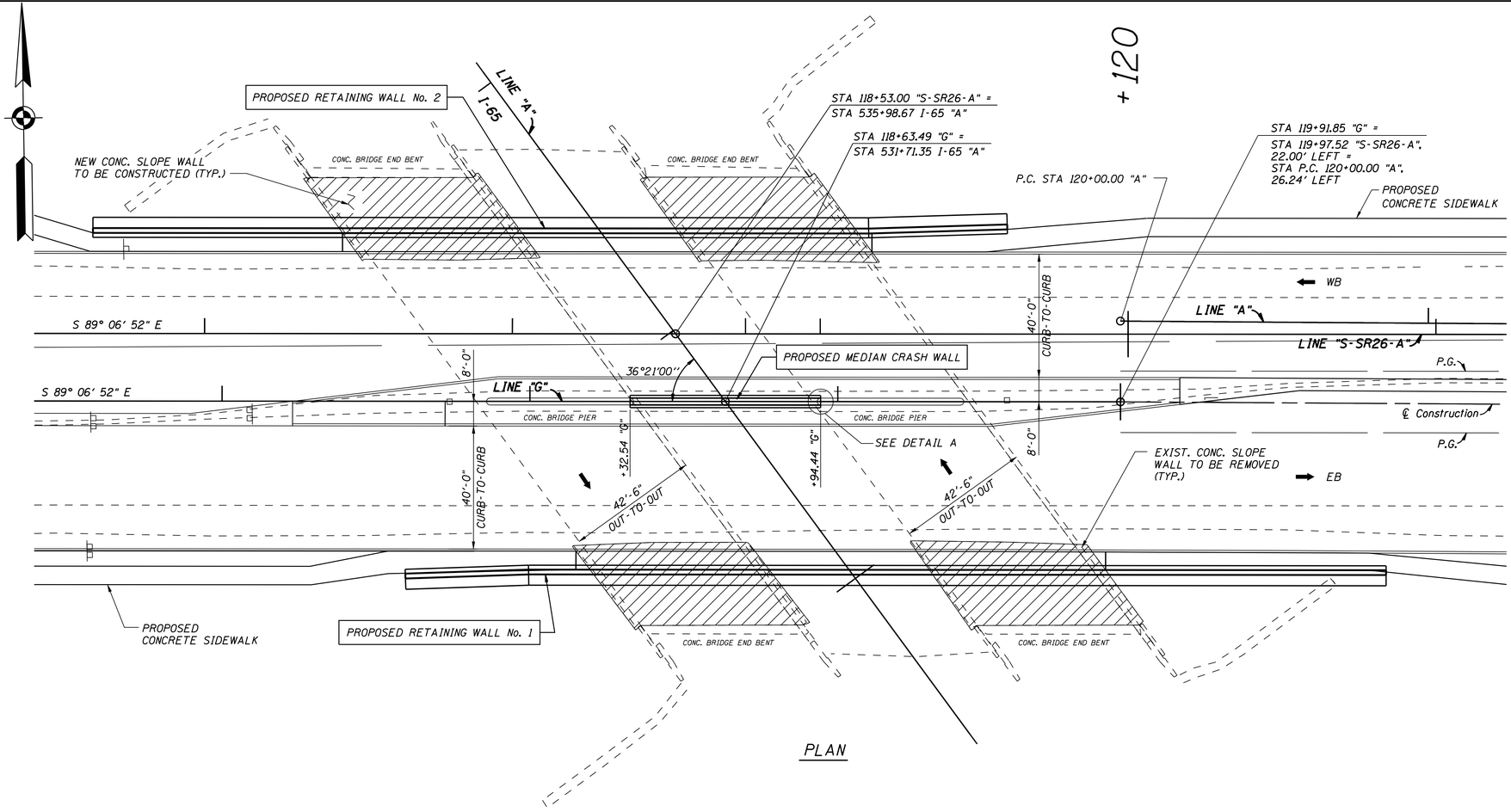

PLAN

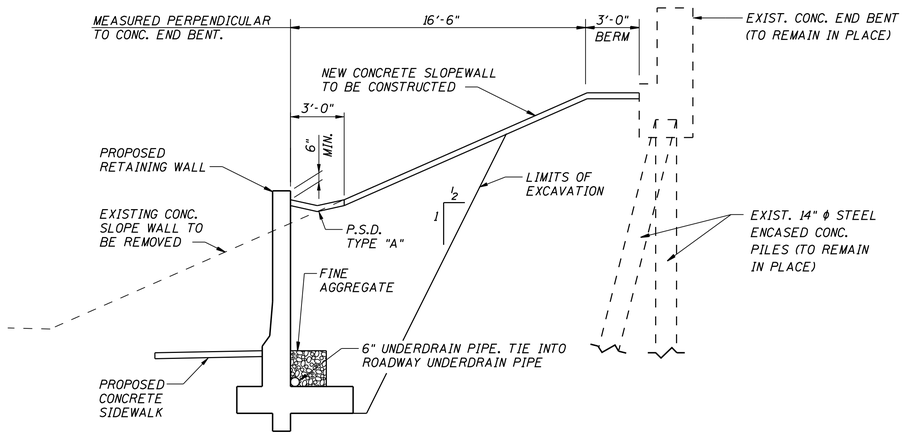

EXCAVATION DETAIL

NOT TO SCALE

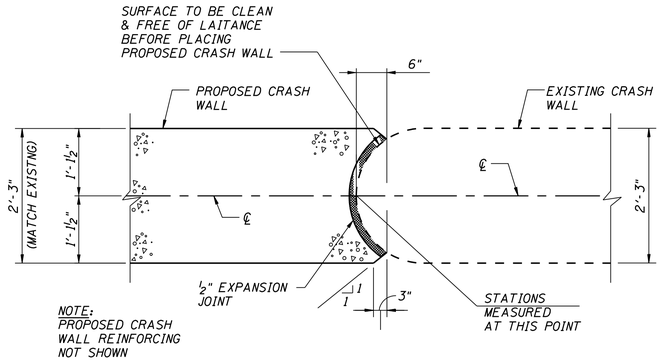

DETAIL A
INTERFACE @ CRASH WALLS

NOT TO SCALE

DESIGN DATA

- DESIGN SPECIFICATIONS: AASHTO STANDARD SPECIFICATIONS FOR HIGHWAY BRIDGES, 17TH EDITION, 2002 AND ALL SUBSEQUENT INTERIMS.
- DESIGN IS IN ACCORDANCE WITH LOAD FACTOR DESIGN METHOD.
- DESIGN STRENGTHS FOR LOAD FACTOR DESIGN:
  fy = 60 KSI
  f'c = 3,500 PSI (CLASS A)
  f'c = 3,000 PSI (CLASS B)
- DESIGN ASSUMPTIONS:
  UNIT WEIGHT OF BACKFILL = 130 PCF
  ANGLE OF INTERNAL FRICTION OF RETAINED SOIL = 30°
  RANKINE EARTH PRESSURE THEORY USED TO CALCULATE SOIL PRESSURE
  LATERAL ACTIVE EARTH PRESSURE COEFFICIENT Ka = 0.537
- ALLOWABLE SOIL BEARING PRESSURE = 3500 PSF
- ULTIMATE ADHESION BETWEEN FOUNDATION SOIL AND CONCRETE = 1350 PSF
- ULTIMATE COHESION OF FOUNDATION SOIL = 2000 PSF

GENERAL NOTES

- PLANS FOR EXISTING STRUCTURES ARE ON FILE AND ARE AVAILABLE UPON REQUEST IN THE BRIDGE DEPARTMENT INDIANA DEPARTMENT OF TRANSPORTATION AS: BRIDGE FILE 165-172-5539
- ALL REINFORCING STEEL SHALL BE GRADE 60.
- ALL REINFORCING BARS TO BE EPOXY COATED.
- PROVIDE MINIMUM LAP OR EMBEDMENT LENGTH OF 30 DIAMETERS OR IN ACCORDANCE WITH AASHTO, WHICHEVER IS GREATER.
- CONCRETE IN MEDIAN CRASH WALLS AND RETAINING WALLS TO BE CLASS "A" (f'c = 3500 PSI).
- CONCRETE IN FOOTINGS TO BE CLASS "B" (f'c = 3000 PSI).
- CHAMFER ALL EXPOSED EDGES 1 INCH UNLESS OTHERWISE NOTED.
- ALL DIMENSIONS, STATIONS AND ELEVATIONS ARE IN FEET, UNLESS NOTED.
- ALL REINFORCING BAR DIAGRAM DIMENSIONS ARE SHOWN OUT-TO-OUT UNLESS OTHERWISE NOTED.
- VERIFY ALL DIMENSIONS, ELEVATIONS AND GEOMETRY OF EXISTING STRUCTURE IN THE FIELD AS NECESSARY FOR PROPER FIT OF PROPOSED CONSTRUCTION.
- ALL CONSTRUCTION JOINTS IN FOOTING ARE OPTIONAL.

ABBREVIATIONS

FF = FRONT FACE
RF = REAR FACE
EF = EACH FACE
CC = CLEAR COVER

NOTES

1. FOR PROPOSED RETAINING WALL DETAILS SEE SHEETS 45-50.
2. FOR PROPOSED MEDIAN CRASH WALL DETAILS SEE SHEET 44.

LEGEND:

➡ DIRECTION OF TRAFFIC

▨ LIMITS OF REMOVAL

HUBERT H. JANSSEN
REGISTERED
No. 18131
STATE OF INDIANA
PROFESSIONAL ENGINEER

RECOMMENDED FOR APPROVAL _____ 1-9-08
DESIGN ENGINEER — DATE

DESIGNED: EJO | DRAWN: SR
CHECKED: BJM | CHECKED: EJO

INDIANA
DEPARTMENT OF TRANSPORTATION

LAYOUT DETAILS
PLAN VIEW

HORIZONTAL SCALE	BRIDGE FILE
1" = 20'-0"	
VERTICAL SCALE	DESIGNATION
¼" = 1'	9802780
SURVEY BOOK	SHEETS
17135	50 of 136
CONTRACT	PROJECT
IR-29162	IM-65-6(063)

1/9/2008 2:42:54 PM P:\P60005540\900_CAD\901_Drawings\Sheet\05540_Walls_01.dgn

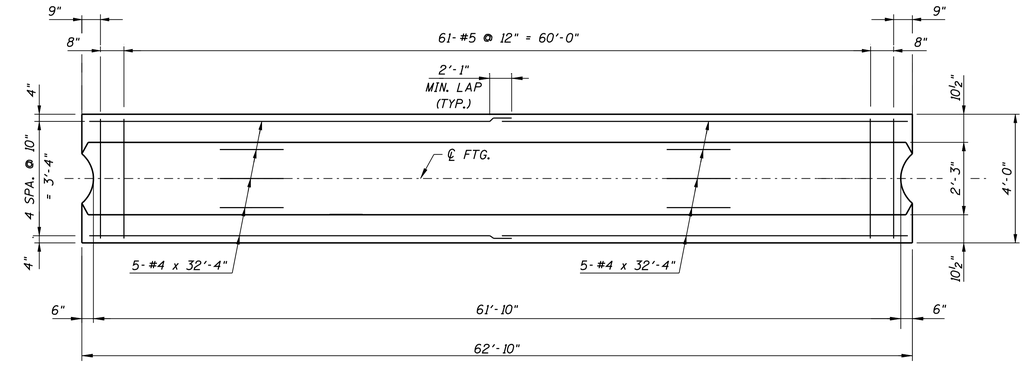

FOOTING PLAN
NOT TO SCALE

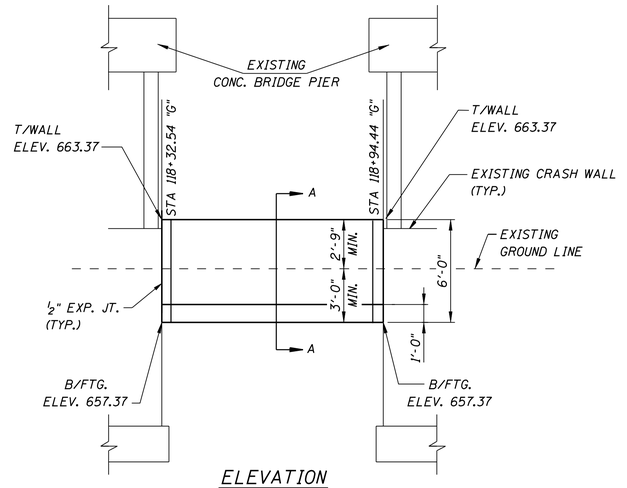

ELEVATION
NOT TO SCALE

BILL OF MATERIALS

SIZE & MARK	NO. OF BARS	LENGTH (FT.)	WEIGHT (LBS.)
EPOXY COATED REINFORCING			
501a	124	6'-3"	
#5	63	3'-6"	
TOTAL #5			1039
401a	62	3'-5"	
#4	34	32'-4"	
TOTAL #4			876
TOTAL EPOXY REINF. STEEL			1915
CONCRETE			
CONCRETE, A, CRASHWALL			27 CY
CONCRETE, B, FOOTINGS			10 CY
MISCELLANEOUS			
STRUCTURE EXCAVATION			55 CY

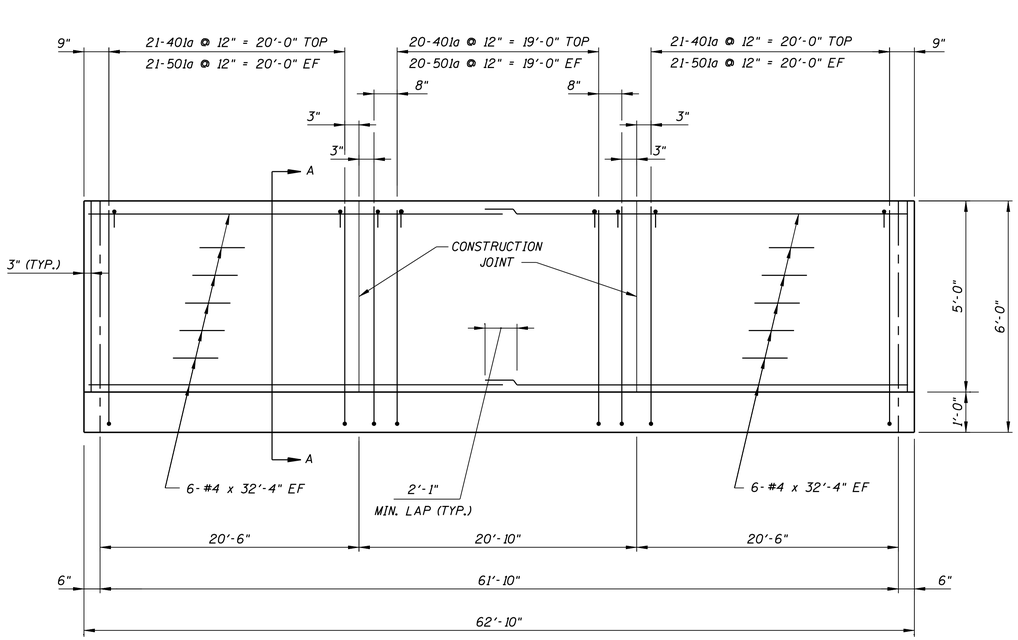

ELEVATION
NOT TO SCALE

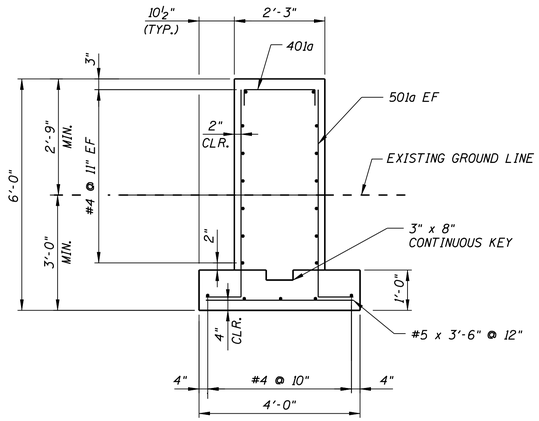

SECTION A-A
NOT TO SCALE

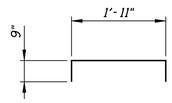

401a

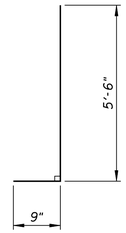

501a

HUBERT H. JANSSEN
REGISTERED
No. 18131
STATE OF INDIANA
PROFESSIONAL ENGINEER

RECOMMENDED FOR APPROVAL — DESIGN ENGINEER — 1-9-08 DATE

DESIGNED: EJO | DRAWN: SR

CHECKED: BJM | CHECKED: EJO

INDIANA
DEPARTMENT OF TRANSPORTATION

REINFORCEMENT DETAILS
MEDIAN CRASH WALL

HORIZONTAL SCALE	BRIDGE FILE
AS NOTED	
VERTICAL SCALE	DESIGNATION
	9802780

SURVEY BOOK	SHEETS
17135	51 of 136
CONTRACT	PROJECT
IR-29162	IM-65-6(063)

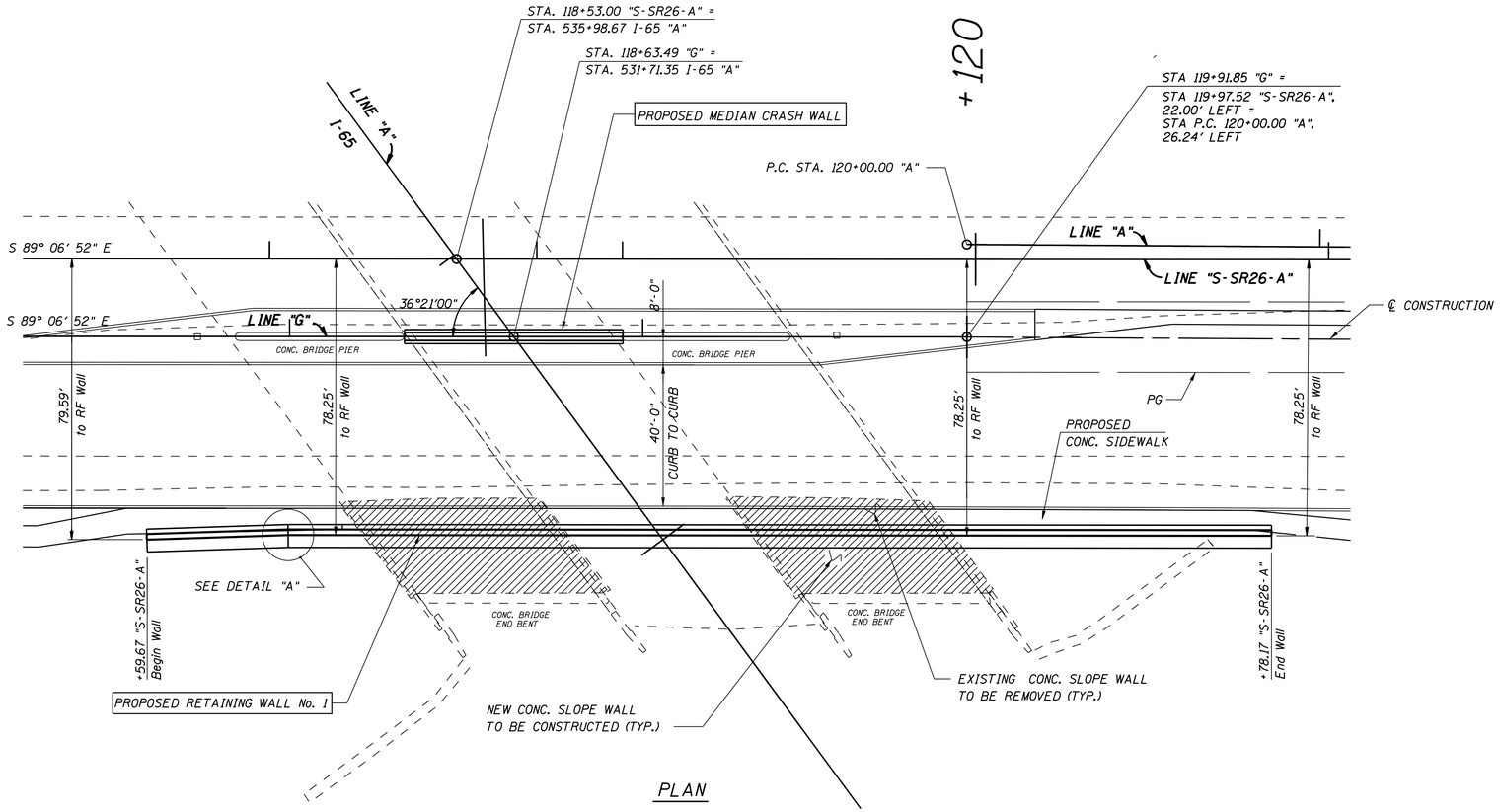

PLAN

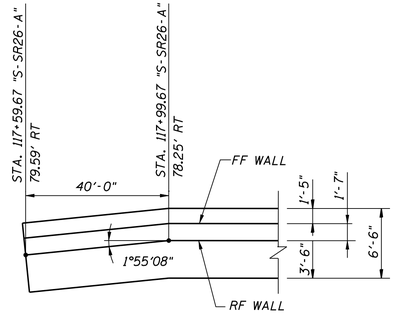

DETAIL A (@ TOP OF FTG.)

NOT TO SCALE

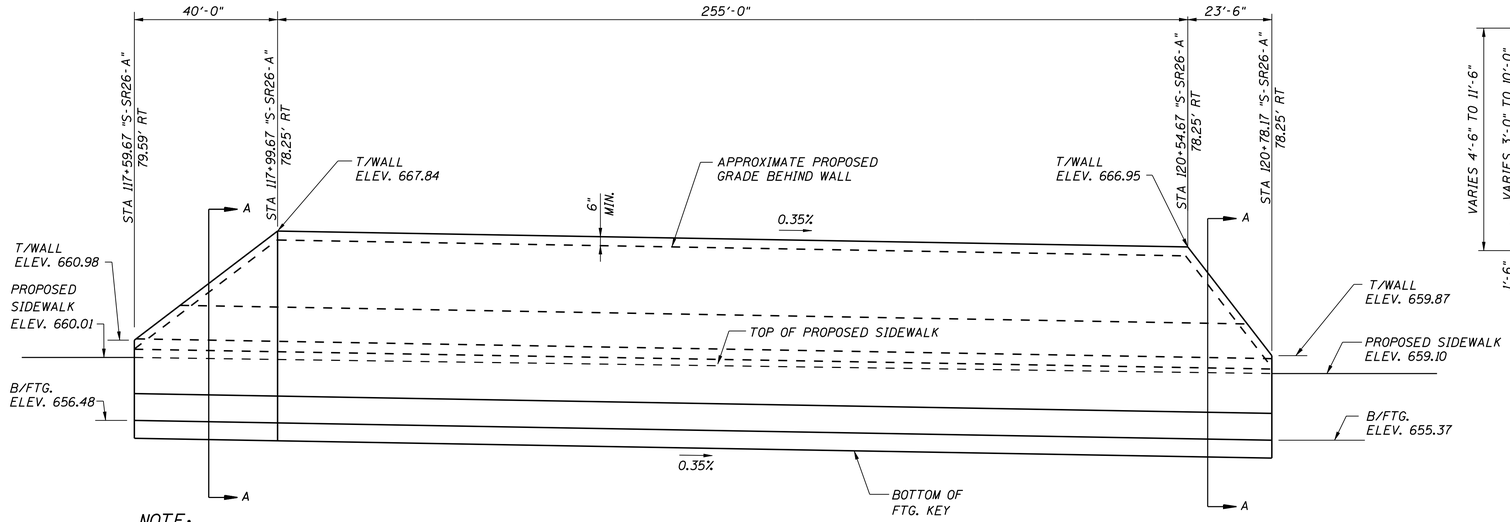

ELEVATION

(LOOKING @ RF WALL)

NOTE:

STATIONING IS REFERENCED ALONG RF OF WALL.

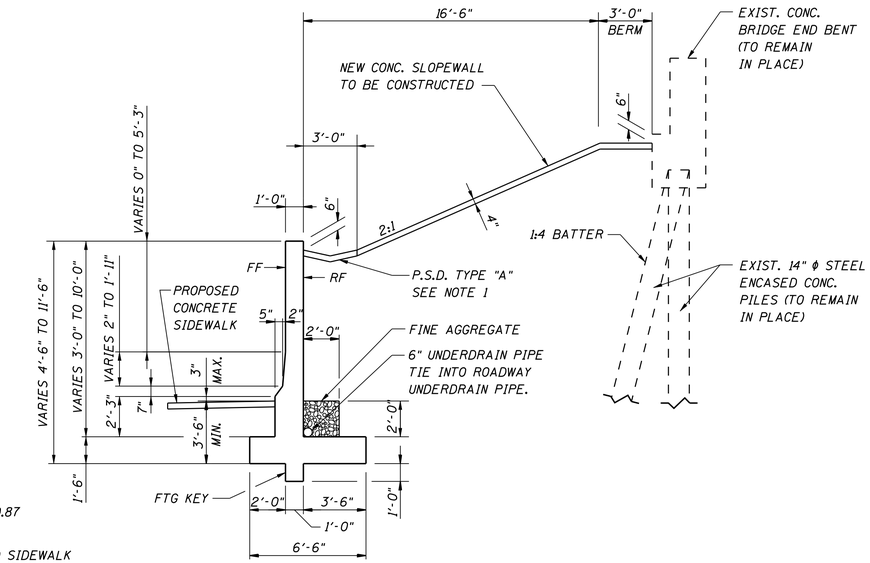

SECTION A-A

NOT TO SCALE

LEGEND:

LIMITS OF REMOVAL

NOTES:

1. FOR P.S.D. TYPE "A" DETAILS SEE INDOT STD. DWG. E607-PSDT-01.

HUBERT H. JANSSEN REGISTERED No. 18131 STATE OF INDIANA PROFESSIONAL ENGINEER

RECOMMENDED FOR APPROVAL _____ 1-9-08
DESIGN ENGINEER DATE

DESIGNED: EJO DRAWN: SR
CHECKED: BJM CHECKED: EJO

INDIANA DEPARTMENT OF TRANSPORTATION

LAYOUT DETAILS
RETAINING WALL NO 1

HORIZONTAL SCALE	BRIDGE FILE
1" = 20'-0"	
VERTICAL SCALE	DESIGNATION
1" = 5'-0"	9802780
SURVEY BOOK	SHEETS
17135	52 of 136
CONTRACT	PROJECT
IR-29162	IM-65-6(063)

1/9/2008 2:43:14 PM P:\P60005540\900_CAD\901_Drawings\Sheet\05540_Walls_01.dgn

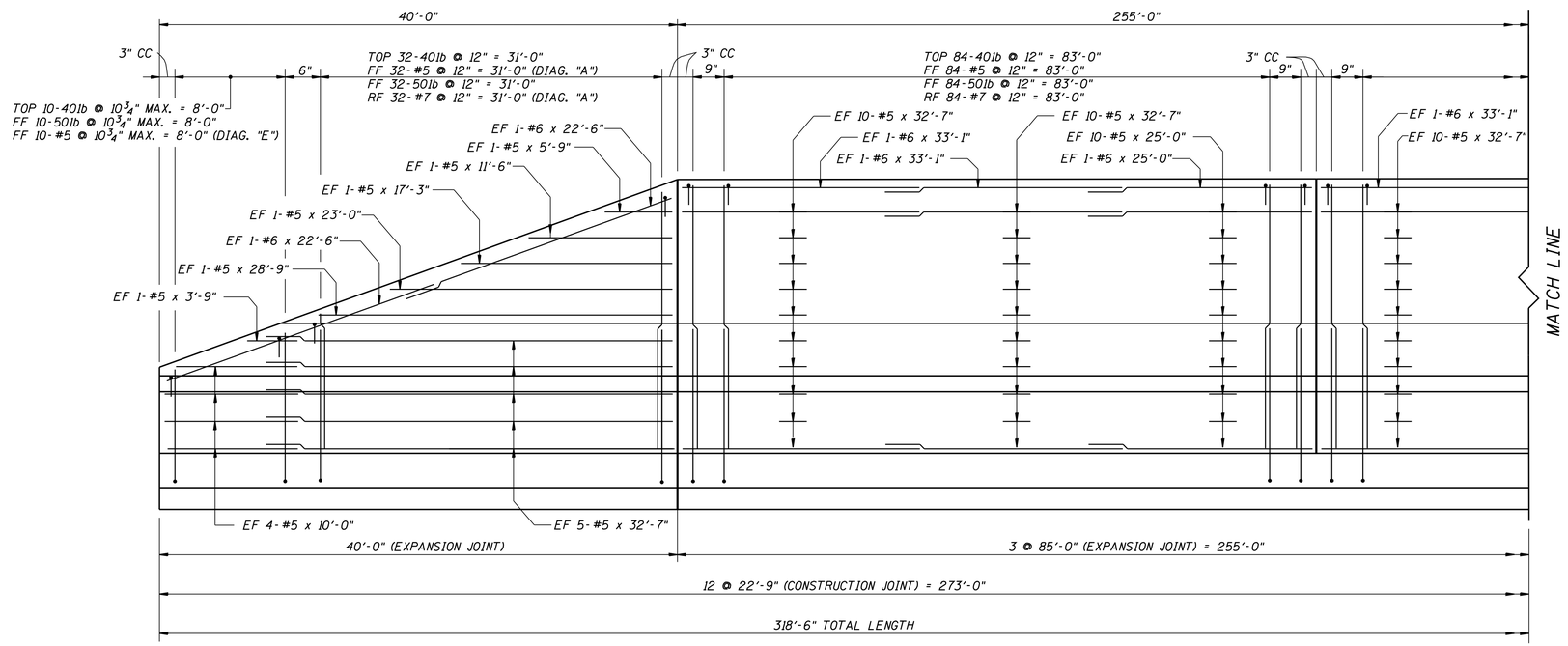

NOTE: WALL DIMENSIONS ARE MEASURED ALONG RF WALL.

ELEVATION
(LOOKING @ RF WALL)
NOT TO SCALE

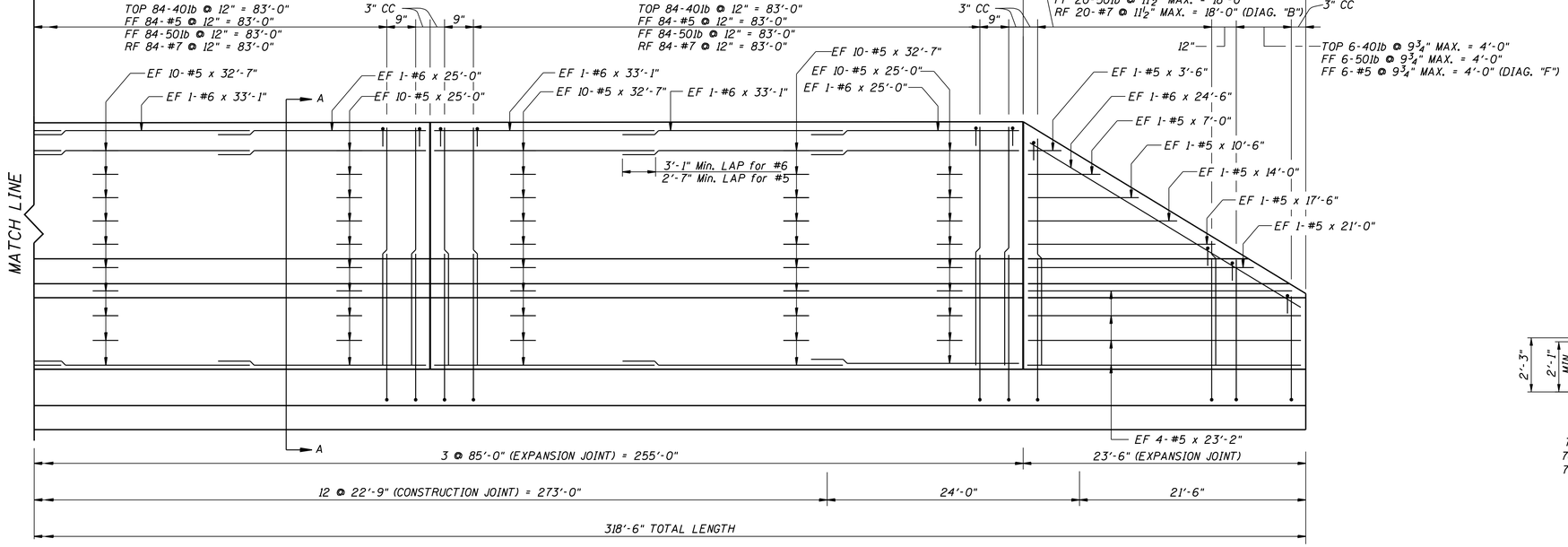

ELEVATION
(LOOKING @ RF WALL)
NOT TO SCALE

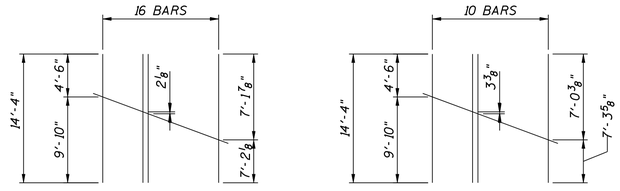

STEEL CUTTING DIAGRAM "A"

STEEL CUTTING DIAGRAM "B"

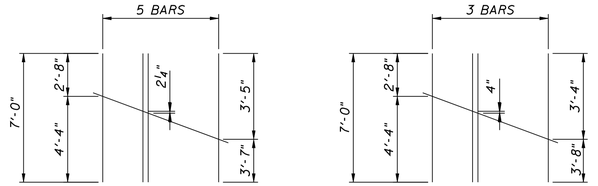

STEEL CUTTING DIAGRAM "E"

STEEL CUTTING DIAGRAM "F"

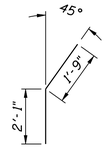

501b

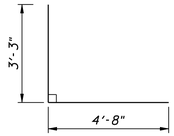

502b

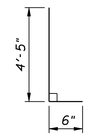

503b

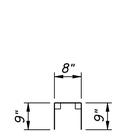

401b

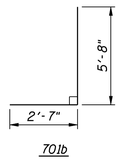

701b

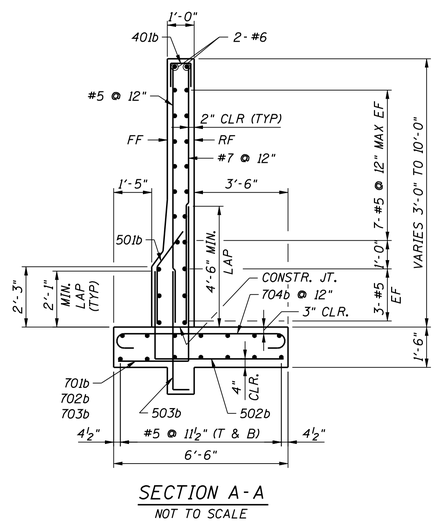

SECTION A-A
NOT TO SCALE

HUBERT H. JANSSEN REGISTERED No. 18131 STATE OF INDIANA PROFESSIONAL ENGINEER

RECOMMENDED FOR APPROVAL — DESIGN ENGINEER — 1-9-08 DATE

DESIGNED: EJO DRAWN: CHD

CHECKED: BJM CHECKED: EJO

INDIANA DEPARTMENT OF TRANSPORTATION

REINFORCEMENT DETAILS RETAINING WALL NO 1

HORIZONTAL SCALE	BRIDGE FILE
AS NOTED	
VERTICAL SCALE	DESIGNATION
	9802780
SURVEY BOOK	SHEETS
17135	53 of 136
CONTRACT	PROJECT
IR-29162	IM-65-6(063)

1/9/2008 2:43:22 PM P:\P60005540\900_CAD\901_Drawings\Sheet\05540_Walls_01.dgn

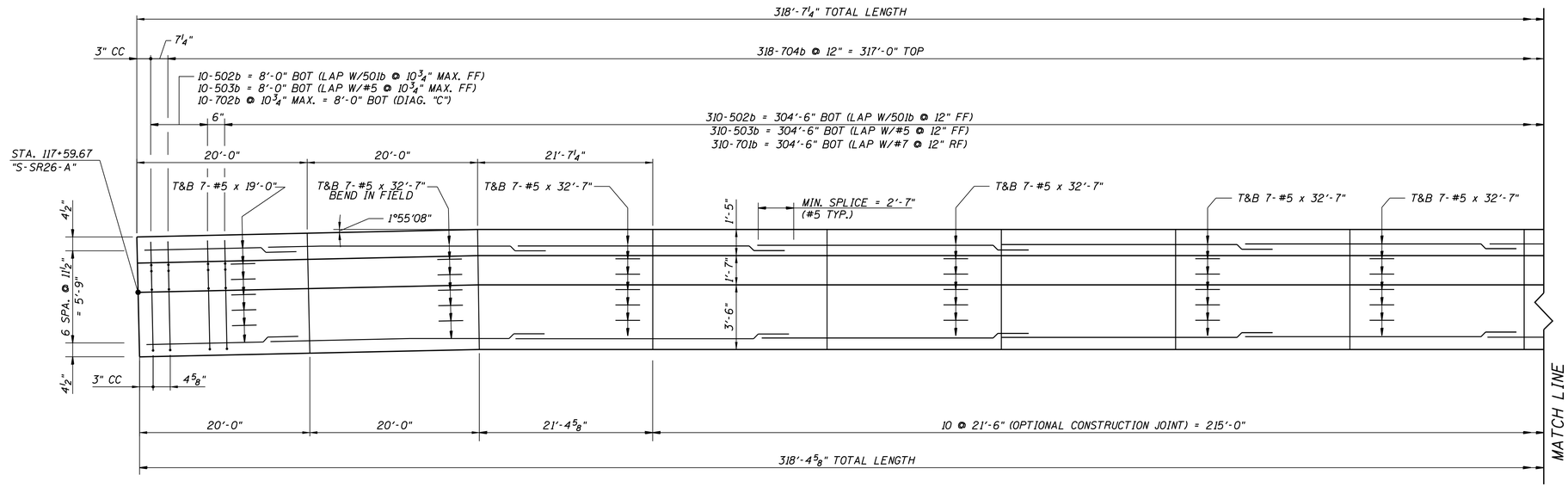

FOOTING PLAN
NOT TO SCALE

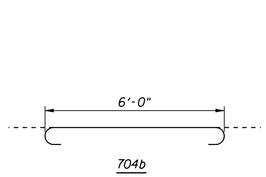

704b

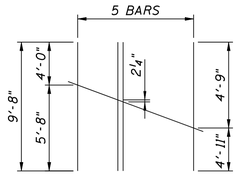

STEEL CUTTING DIAGRAM "C"

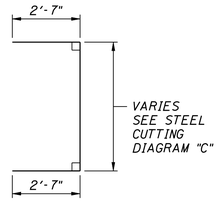

702b

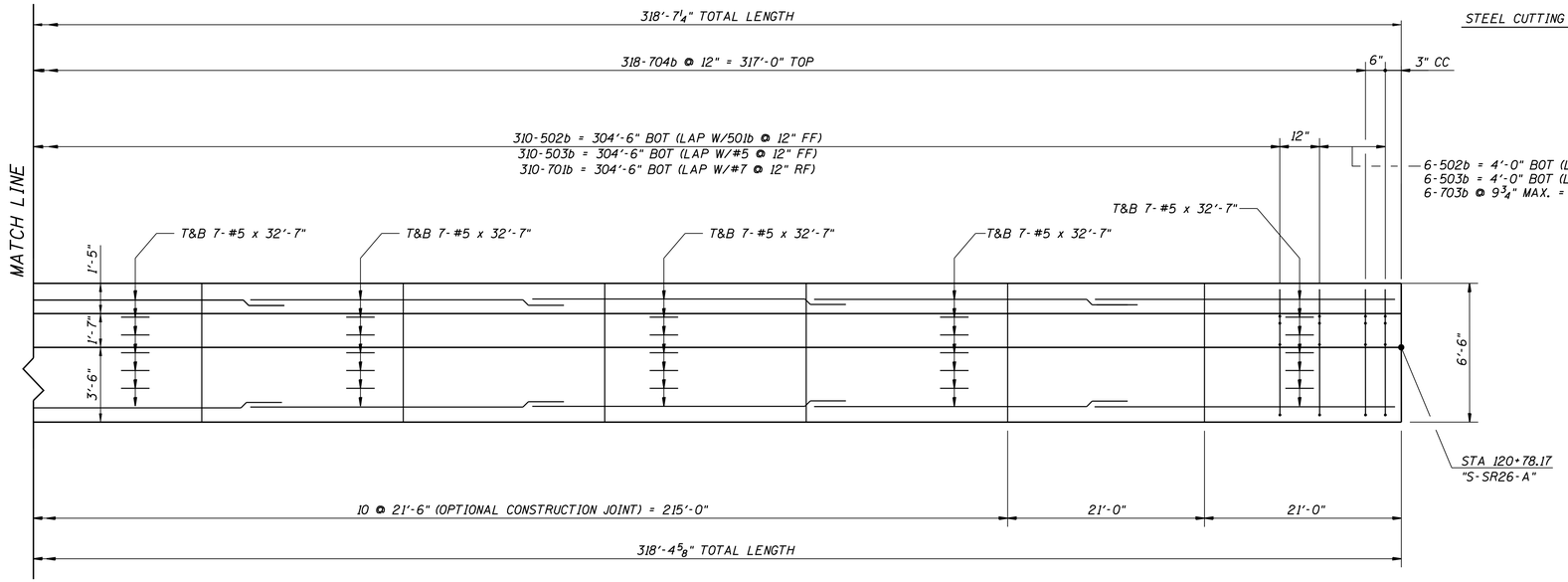

FOOTING PLAN
NOT TO SCALE

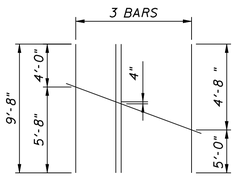

STEEL CUTTING DIAGRAM "D"

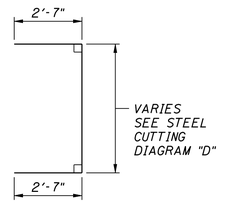

703b

NOTES:

1. MAXIMUM ACTUAL BEARING PRESSURE = 2.77 KSF

BILL OF MATERIALS

SIZE & MARK	NO. OF BARS	LENGTH (FT.)	WEIGHT (LBS.)
EPOXY COATED REINFORCING			
701b	310	8' - 3"	
702b	5	14' -10"	
703b	3	14' -10"	
704b	320	8' - 4"	
# 7	26	14' - 4"	
# 7	258	9' -10"	
TOTAL # 7			16867
# 6	12	33' - 1"	
# 6	6	25' - 0"	
# 6	2	24' - 6"	
# 6	4	22' - 6"	
TOTAL # 6			1031
501b	326	3' -10"	
502b	326	7' -11"	
503b	326	4' - 11"	
# 5	270	32' - 7"	
# 5	2	28' - 9"	
# 5	60	25' - 0"	
# 5	8	23' - 2"	
# 5	2	23' - 0"	
# 5	2	21' - 0"	
# 5	14	19' - 0"	
# 5	2	17' - 6"	
# 5	2	17' - 3"	
# 5	26	14' - 4"	
# 5	2	14' - 0"	
# 5	2	11' - 6"	
# 5	2	10' - 6"	
# 5	8	10' - 0"	
# 5	258	9' -10"	
# 5	10	7' - 0"	
# 5	2	5' - 9"	
# 5	2	3' - 9"	
# 5	2	3' - 6"	
TOTAL # 5			20395
401b	326	2' - 2"	
TOTAL # 4			473
TOTAL EPOXY REINF. STEEL			38766
CONCRETE			
CONCRETE, A, WALL NO.1			130 CY
CONCRETE, B, FOOTINGS			130 CY
MISCELLANEOUS			
AGGREGATE			50 CY
GEOTEXTILE			285 SY
UNDERDRAIN PIPE			320 LF
STRUCTURE EXCAVATION			1345 CY
STRUCTURE BACKFILL			1010 CY
SLOPEWALL CONCRETE, 4 IN.			175 SY
PAVED SIDE DITCH, TYPE A			320 LF

HUBERT H. JANSSEN REGISTERED No. 18131 STATE OF INDIANA PROFESSIONAL ENGINEER

RECOMMENDED FOR APPROVAL — DESIGN ENGINEER — DATE: 1-9-08

DESIGNED: EJO | DRAWN: CHD | CHECKED: BJM | CHECKED: EJO

INDIANA DEPARTMENT OF TRANSPORTATION

REINFORCEMENT DETAILS
RETAINING WALL NO 1

HORIZONTAL SCALE	BRIDGE FILE
AS NOTED	
VERTICAL SCALE	DESIGNATION
	9802780
SURVEY BOOK	SHEETS
17135	54 of 136
CONTRACT	PROJECT
IR-29162	IM-65-6(063)

1/9/2008 3:27:21 PM P:\P60005540\900_CAD\901_Drawings\Sheet\05540_Walls_01.dgn

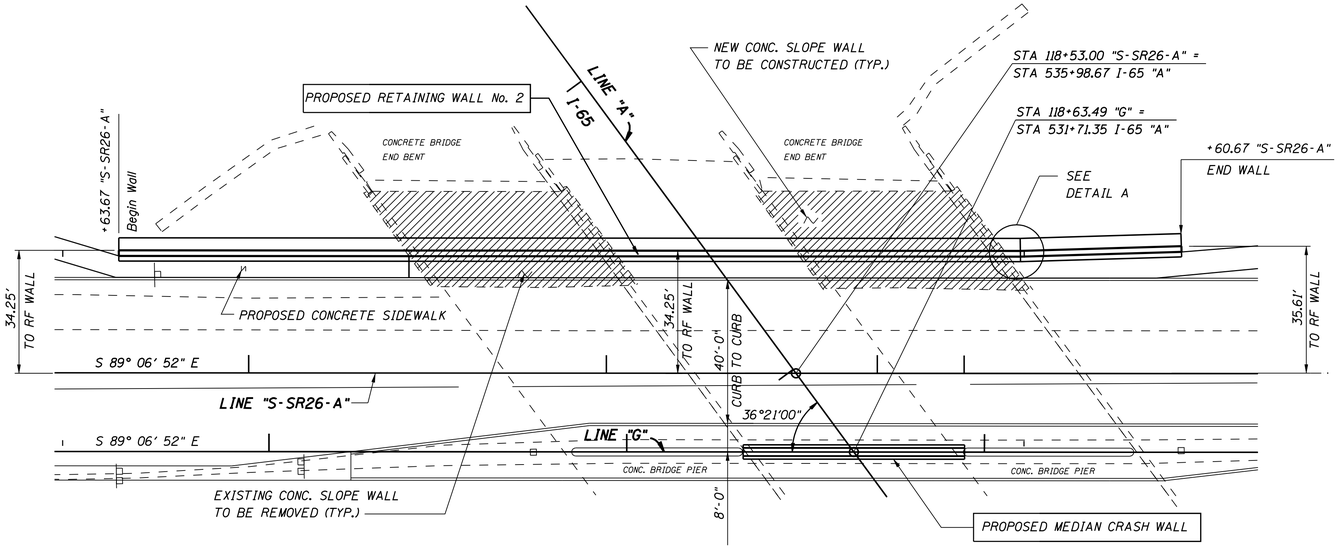

PLAN

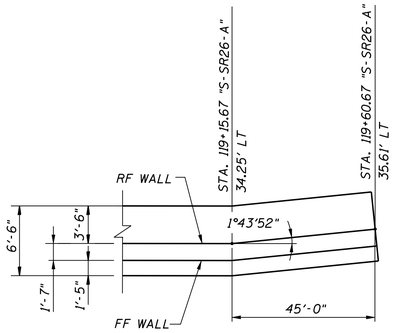

DETAIL A (@ TOP OF FTG.)

NOT TO SCALE

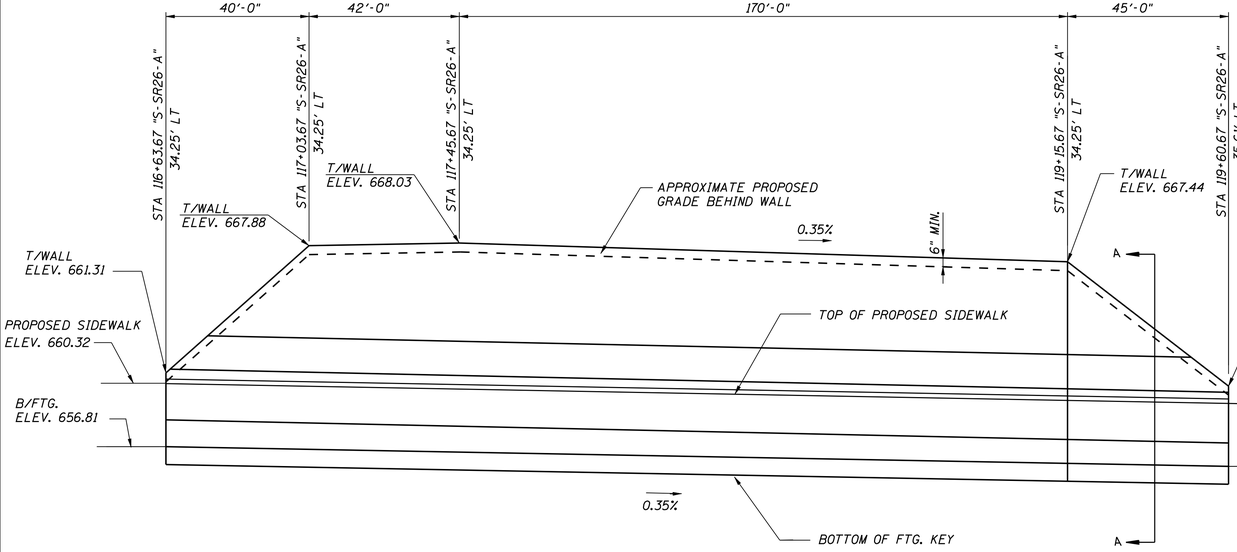

ELEVATION

(LOOKING @ FF WALL)

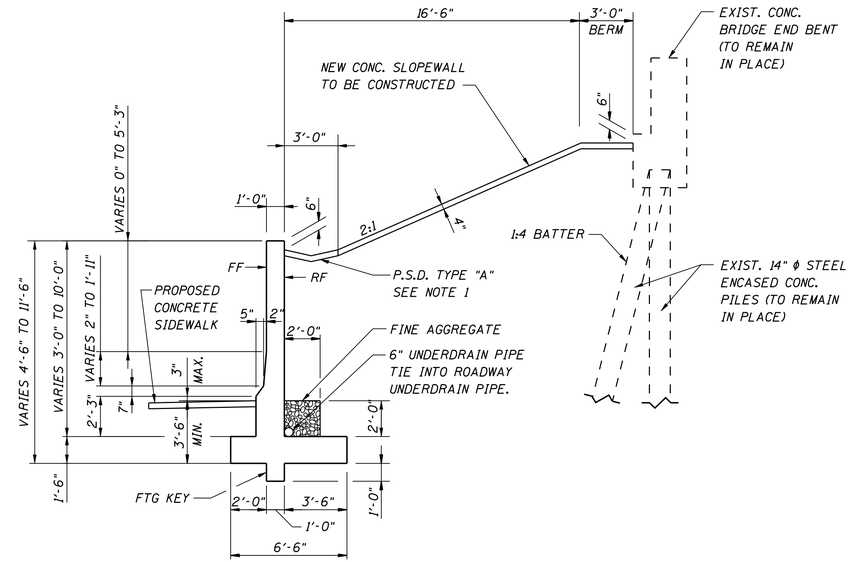

SECTION A-A

NOT TO SCALE

NOTES:

STATIONING IS REFERENCED ALONG RF OF WALL

LEGEND:

LIMITS OF REMOVAL

NOTES:

1. FOR P.S.D. TYPE "A" DETAILS SEE INDOT STD. DWG. E607-PSDT-01

HUBERT H. JANSSEN
REGISTERED
No. 18131
STATE OF INDIANA
PROFESSIONAL ENGINEER

RECOMMENDED FOR APPROVAL — DESIGN ENGINEER — 1-9-08 DATE

DESIGNED: EJO	DRAWN: SR
CHECKED: BJM	CHECKED: EJO

INDIANA
DEPARTMENT OF TRANSPORTATION

LAYOUT DETAILS
RETAINING WALL NO 2

HORIZONTAL SCALE	BRIDGE FILE
1" = 20'-0"	
VERTICAL SCALE	DESIGNATION
1" = 5'-0"	9802780
SURVEY BOOK	SHEETS
17135	55 of 136
CONTRACT	PROJECT
IR-29162	IM-65-6(063)

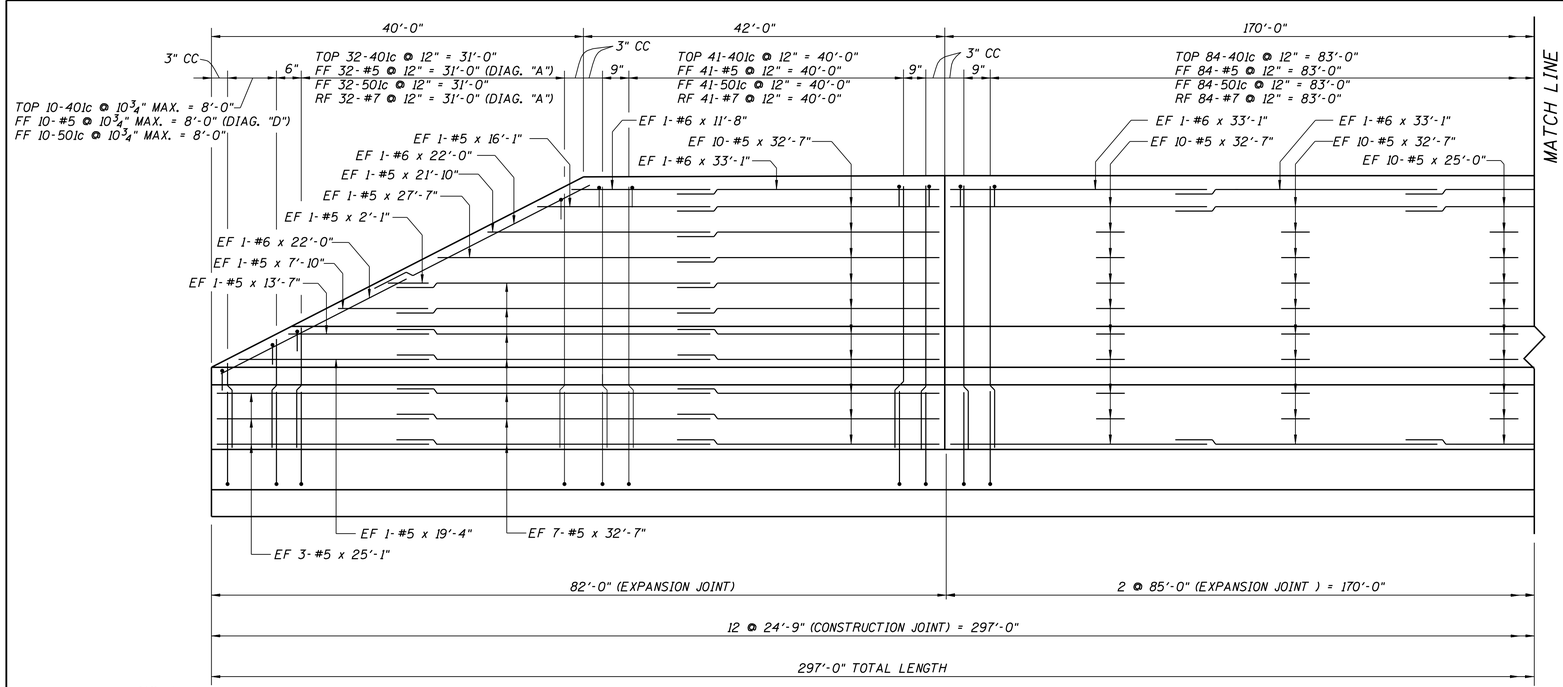

NOTE:
WALL DIMENSIONS ARE MEASURED ALONG RF WALL

ELEVATION
(LOOKING @ FF WALL)
NOT TO SCALE

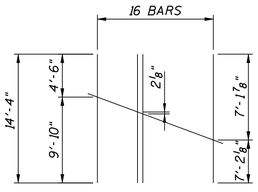

STEEL CUTTING DIAGRAM "A"

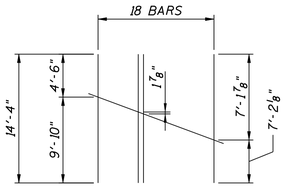

STEEL CUTTING DIAGRAM "B"

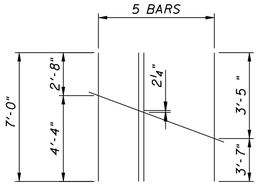

STEEL CUTTING DIAGRAM "D"

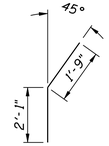

501c

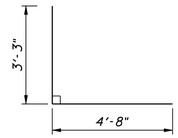

502c

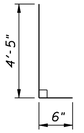

503c

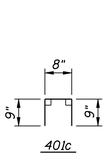

401c

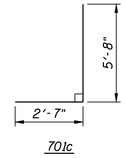

701c

ELEVATION
(LOOKING @ FF WALL)
NOT TO SCALE

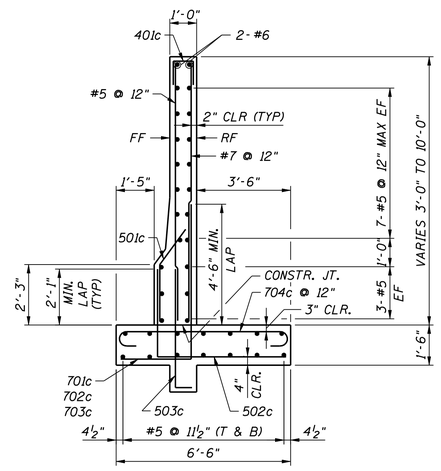

SECTION A-A
NOT TO SCALE

HUBERT H. JANSSEN REGISTERED No. 18131 STATE OF INDIANA PROFESSIONAL ENGINEER

RECOMMENDED FOR APPROVAL — DESIGN ENGINEER — 1-9-08 DATE

DESIGNED: EJO | DRAWN: CHD
CHECKED: BJM | CHECKED: EJO

INDIANA DEPARTMENT OF TRANSPORTATION

REINFORCEMENT DETAILS RETAINING WALL NO 2

HORIZONTAL SCALE	BRIDGE FILE
AS NOTED	
VERTICAL SCALE	DESIGNATION
	9802780
SURVEY BOOK	SHEETS
17135	56 of 136
CONTRACT	PROJECT
IR-29162	IM-65-6(063)

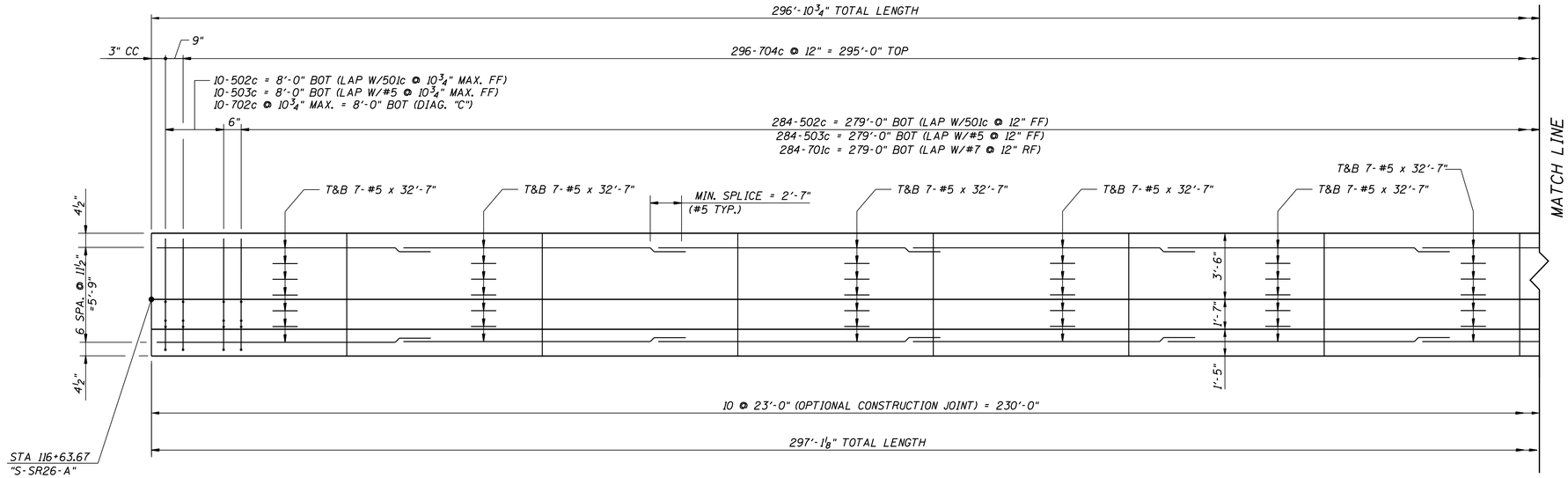

FOOTING PLAN
NOT TO SCALE

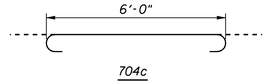

704c

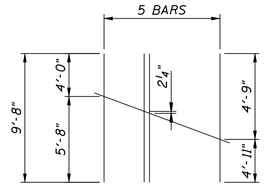

STEEL CUTTING DIAGRAM "C"

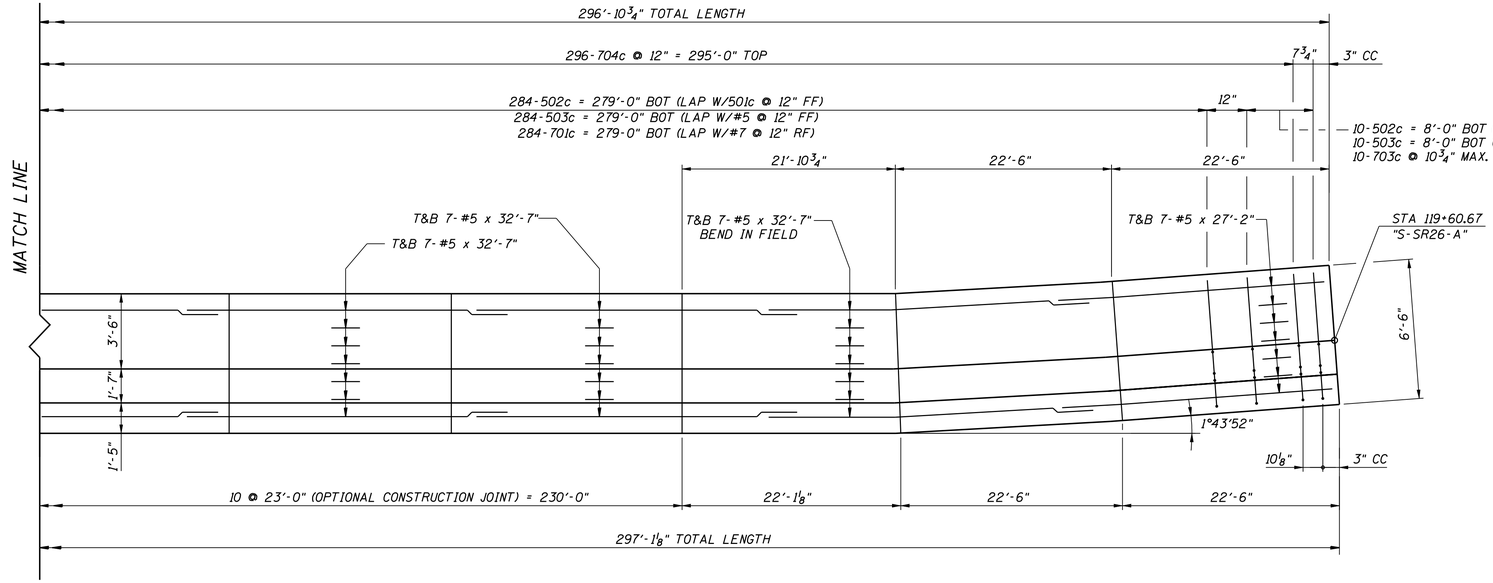

FOOTING PLAN
NOT TO SCALE

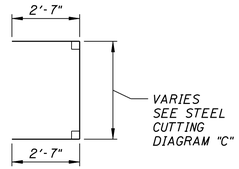

702c

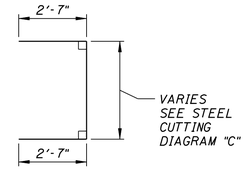

703c

BILL OF MATERIALS

SIZE & MARK	NO. OF BARS	LENGTH (FT.)	WEIGHT (LBS.)
EPOXY COATED REINFORCING			
701c	284	8' - 3"	
702c	5	14' -10"	
703c	5	14' -10"	
704c	296	8' - 4"	
# 7	34	14' - 4"	
# 7	215	9' -10"	
TOTAL # 7			15448
# 6	10	33' - 1"	
# 6	4	25' - 0"	
# 6	4	24' - 6"	
# 6	4	22' - 0"	
# 6	2	11' - 8"	
TOTAL # 6			962
501c	304	3' -10"	
502c	304	7' -11"	
503c	304	4' -11"	
# 5	252	32' - 7"	
# 5	2	27' - 7"	
# 5	14	27' - 2"	
# 5	2	26' - 0"	
# 5	6	25' - 1"	
# 5	40	25' - 0"	
# 5	2	21' -10"	
# 5	2	19' - 6"	
# 5	2	19' - 4"	
# 5	2	16' - 1"	
# 5	34	14' - 4"	
# 5	2	13' - 7"	
# 5	8	13' - 5"	
# 5	2	13' - 0"	
# 5	215	9' -10"	
# 5	2	7' - 10"	
# 5	10	7' - 0"	
# 5	2	6' - 11"	
# 5	2	6' - 6"	
# 5	2	2' - 1"	
TOTAL # 5			18719
401c	304	2' - 2"	
TOTAL # 4			441
TOTAL EPOXY REINF. STEEL			35570
CONCRETE			
CONCRETE, A, WALL NO.1			120 CY
CONCRETE, B, FOOTINGS			120 CY
MISCELLANEOUS			
AGGREGATE			45 CY
GEOTEXTILE			265 SY
UNDERDRAIN PIPE			300 LF
STRUCTURE EXCAVATION			1105 CY
STRUCTURE BACKFILL			820 CY
SLOPEWALL CONCRETE, 4 IN.			175 SY
PAVED SIDE DITCH, TYPE A			300 LF

NOTES:

1. MAXIMUM ACTUAL BEARING PRESSURE = 2.77 KSF

HUBERT H. JANSSEN
REGISTERED
No. 18131
STATE OF INDIANA
PROFESSIONAL ENGINEER

RECOMMENDED FOR APPROVAL — DESIGN ENGINEER — 1-9-08 DATE

DESIGNED: EJO DRAWN: SR
CHECKED: BJM CHECKED: EJO

INDIANA DEPARTMENT OF TRANSPORTATION

REINFORCEMENT DETAILS
RETAINING WALL NO 2

HORIZONTAL SCALE	BRIDGE FILE
AS NOTED	
VERTICAL SCALE	DESIGNATION
	9802780
SURVEY BOOK	SHEETS
17135	57 of 136
CONTRACT	PROJECT
IR-29162	IM-65-6(063)

1/9/2008 3:41:29 PM P:\P60005540\900_CAD\901_Drawings\Sheet\05540_Walls_02.dgn

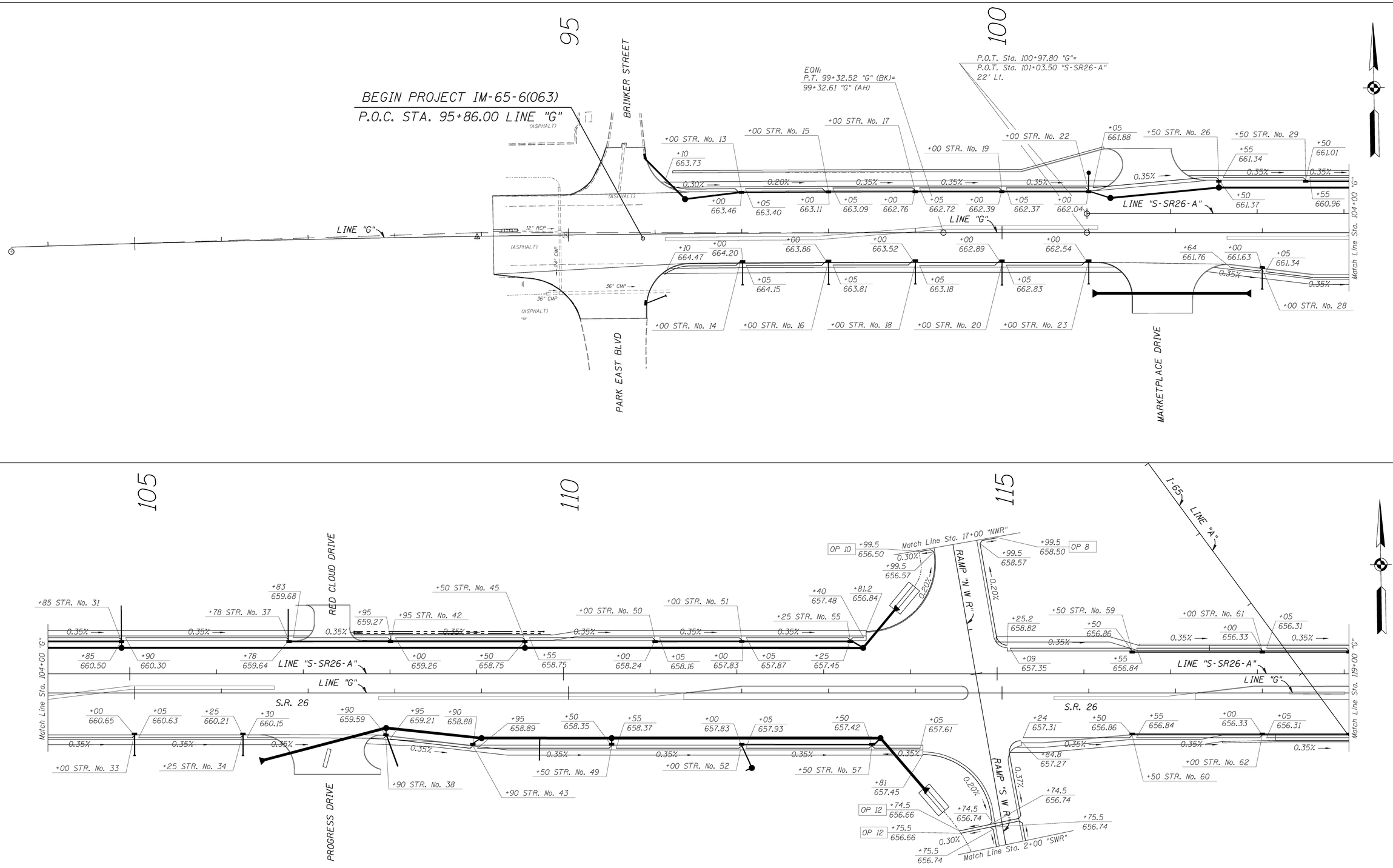

JEFFREY E. LAZZELL
REGISTERED
No. 860163
STATE OF INDIANA
PROFESSIONAL ENGINEER

RECOMMENDED FOR APPROVAL — DESIGN ENGINEER — 2-15-08 — DATE

DESIGNED: JEL — DRAWN: FJ

CHECKED: TA — CHECKED: JEL

INDIANA
DEPARTMENT OF TRANSPORTATION

UNDERDRAIN LAYOUT
STA. 95+00 TO STA. 119+00 "G"

HORIZONTAL SCALE	BRIDGE FILE
1" = 50'-0"	
VERTICAL SCALE	DESIGNATION
	9802780
SURVEY BOOK	SHEETS
17135	58 of 136
CONTRACT	PROJECT
IR-29162	IM-65-6(063)

120

125

130

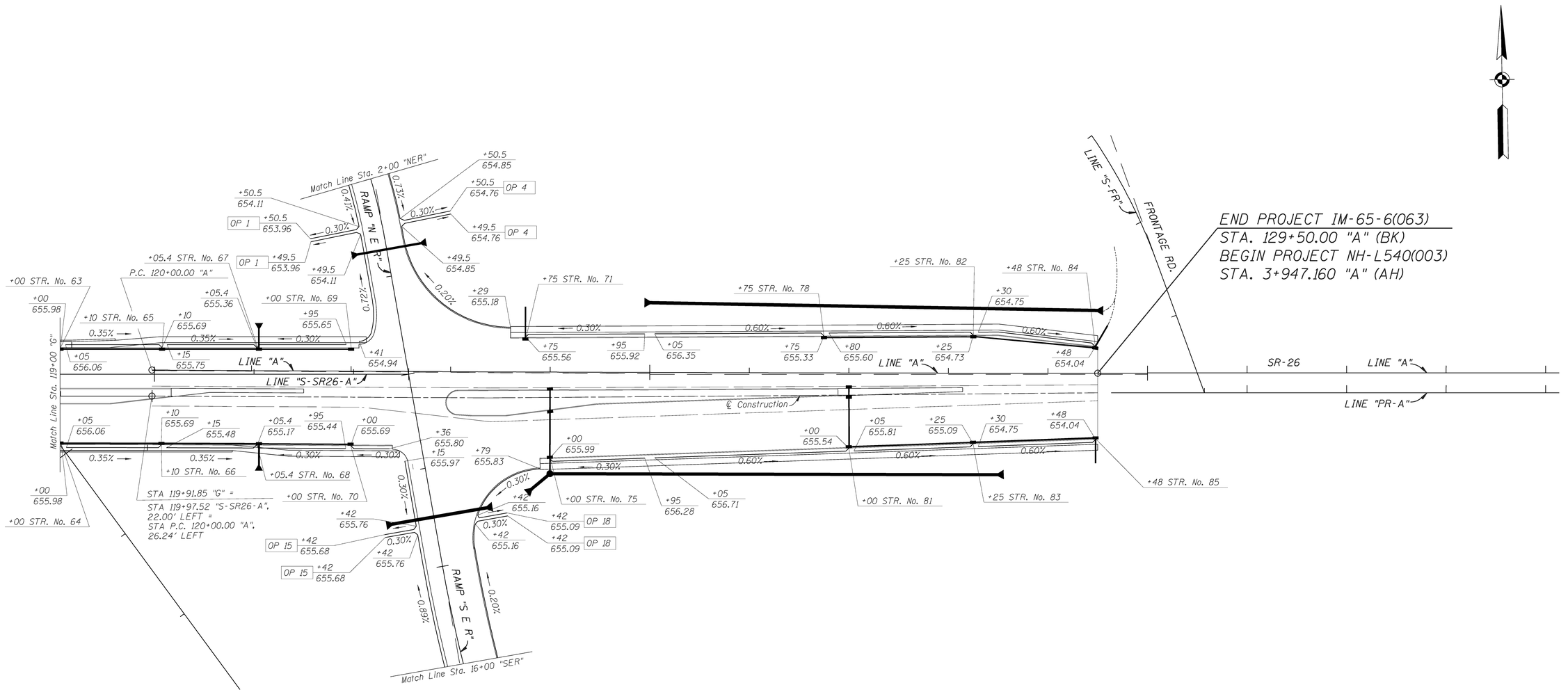

JEFFREY E. LAZZELL
REGISTERED
No. 860163
STATE OF INDIANA
PROFESSIONAL ENGINEER

RECOMMENDED FOR APPROVAL — DESIGN ENGINEER — 2-15-08 — DATE

DESIGNED: JEL — DRAWN: FJ

CHECKED: TA — CHECKED: JEL

INDIANA
DEPARTMENT OF TRANSPORTATION

UNDERDRAIN LAYOUT
STA. 119+00 "G" TO STA. 129+50 "A"

HORIZONTAL SCALE	BRIDGE FILE
1" = 50'-0"	
VERTICAL SCALE	DESIGNATION
	9802780
SURVEY BOOK	SHEETS
17135	59 of 136
CONTRACT	PROJECT
IR-29162	IM-65-6(063)

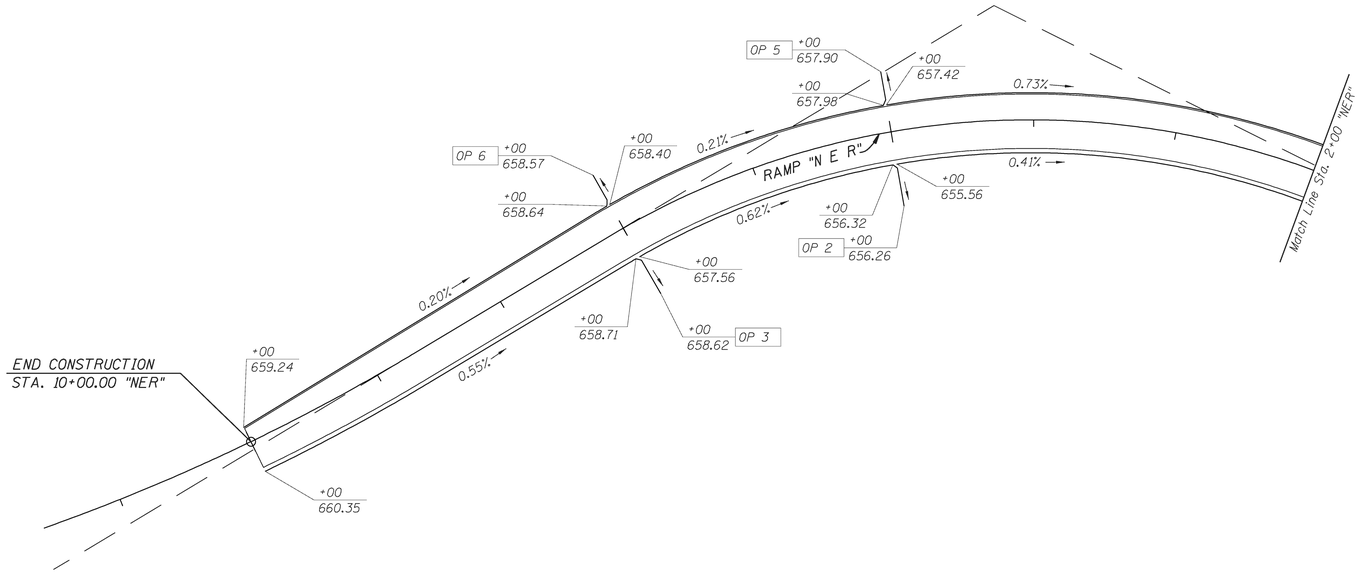

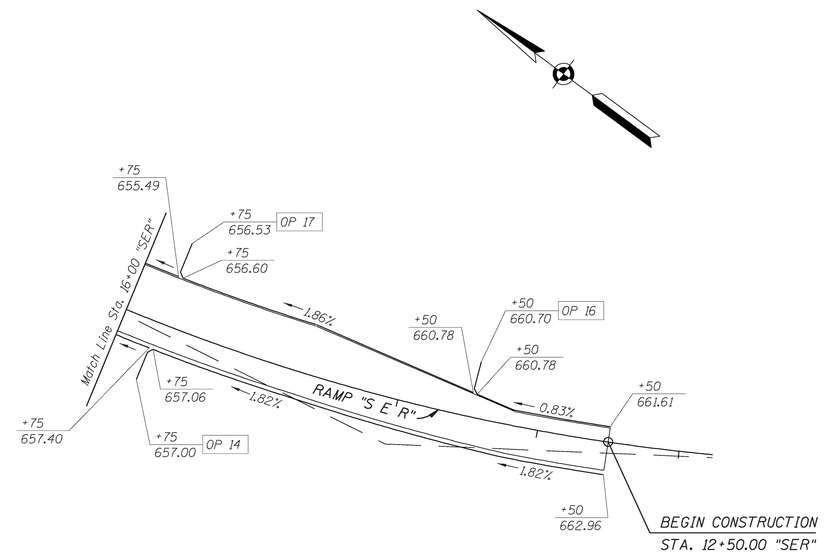

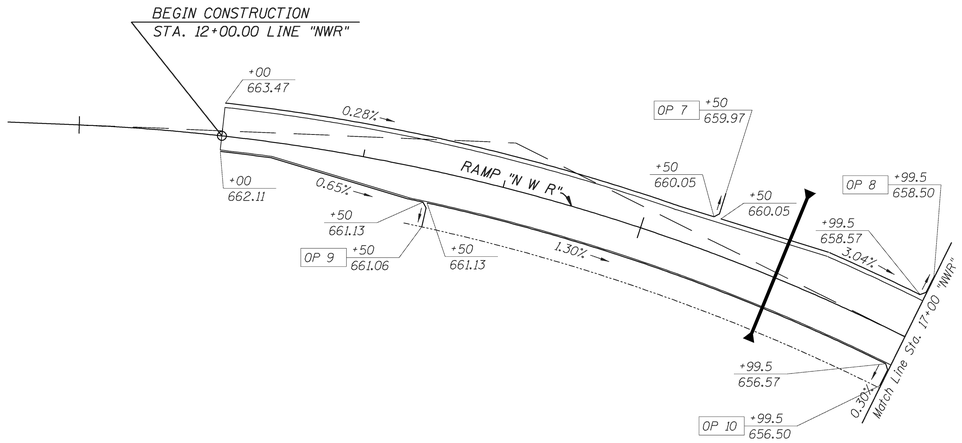

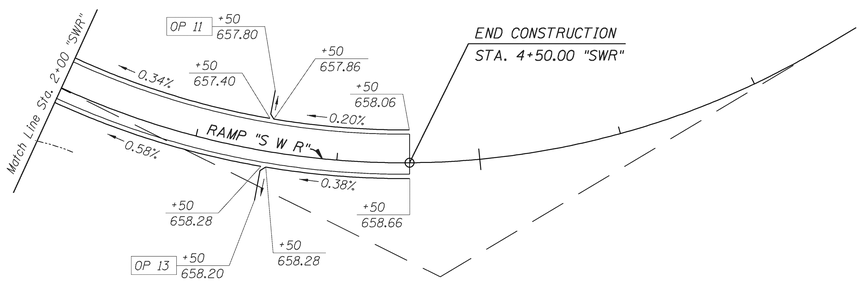

REGISTERED
JEFFREY E. LAZZELL
No. 860163
STATE OF INDIANA
PROFESSIONAL ENGINEER

RECOMMENDED FOR APPROVAL
DESIGN ENGINEER — DATE: 2-15-08

DESIGNED: JEL | DRAWN: FJ
CHECKED: TA | CHECKED: JEL

INDIANA
DEPARTMENT OF TRANSPORTATION

UNDERDRAIN LAYOUT
RAMPS "NWR", "NER", "SWR", "SER"

HORIZONTAL SCALE	BRIDGE FILE
1" = 50'-0"	
VERTICAL SCALE	DESIGNATION
	9802780
SURVEY BOOK	SHEETS
17135	60 of 136
CONTRACT	PROJECT
IR-29162	IM-65-6(063)

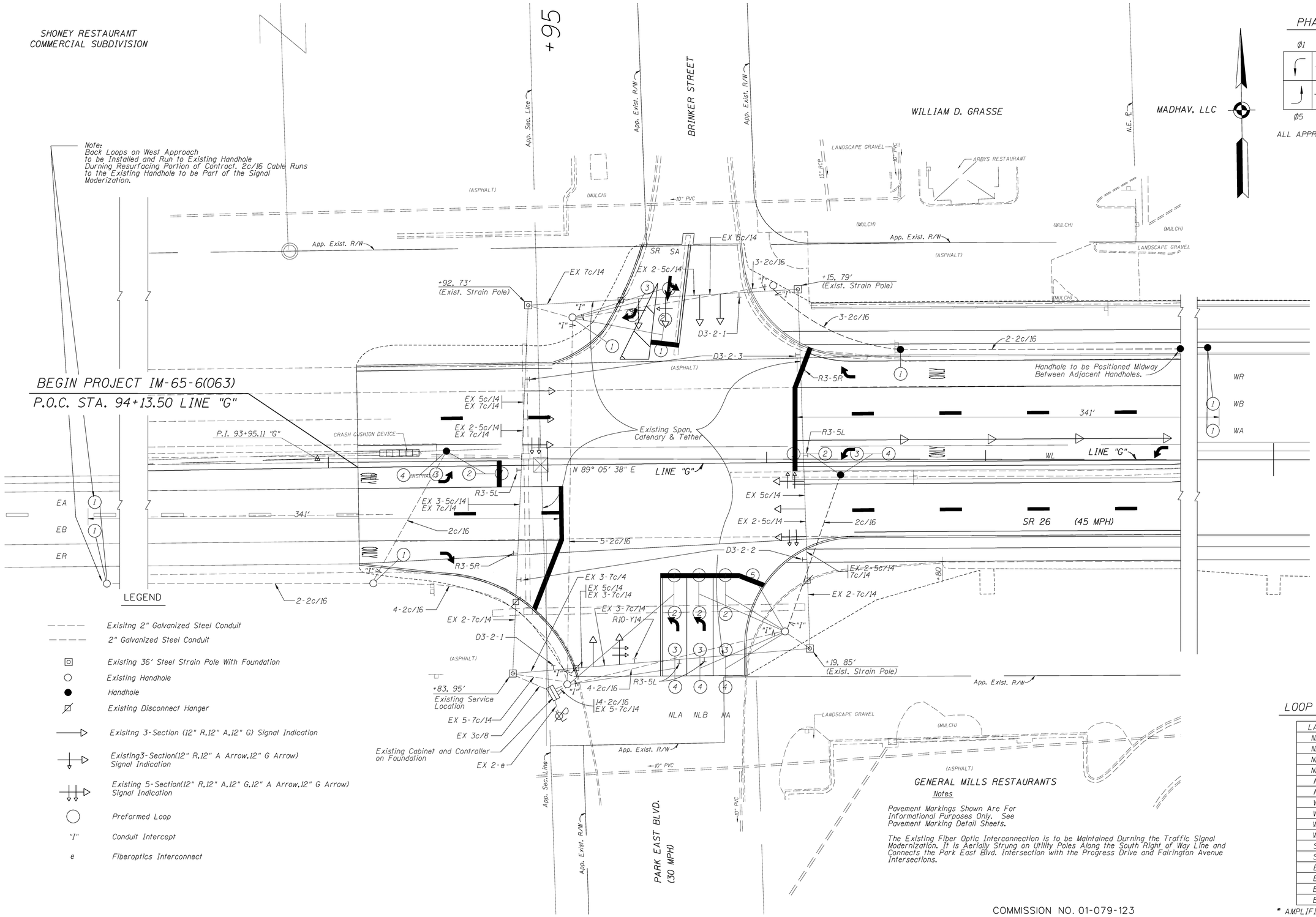

PHASE DIAGRAM

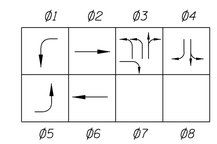

ALL APPROACHES FLASHES RED

LEGEND

- Exisitng 2" Galvanized Steel Conduit
- 2" Galvanized Steel Conduit
- Existing 36' Steel Strain Pole With Foundation
- Existing Handhole
- Handhole
- Existing Disconnect Hanger
- Exisitng 3-Section (12" R,12" A,12" G) Signal Indication
- Existing3-Section(12" R,12" A Arrow,12" G Arrow) Signal Indication
- Existing 5-Section(12" R,12" A,12" G,12" A Arrow,12" G Arrow) Signal Indication
- Preformed Loop
- "I" Conduit Intercept
- e Fiberoptics Interconnect

GENERAL MILLS RESTAURANTS

Notes

Pavement Markings Shown Are For Informational Purposes Only. See Pavement Marking Detail Sheets.

The Existing Fiber Optic Interconnection is to be Maintained Durning the Traffic Signal Modernization. It is Aerially Strung on Utility Poles Along the South Right of Way Line and Connects the Park East Blvd. Intersection with the Progress Drive and Fairington Avenue Intersections.

LOOP TAGGING TABLE

LANE	TAG NUMBER
NLA	NL3-1,2
NLA	NL3-3,4*
NLB	NL3-1,2
NLB	NL3-3,4*
NA	NA3-1,2,3,4*
NA	NA3-5*
WL	WL1-1,2,3,4*
WA	WA6-1
WB	WB6-1
WR	WR6-1
SA	SA4-1,2,3*
SR	SR4-1,2,3*
EL	EL5-1,2,3,4*
EA	EA2-1
EB	EB2-1
ER	ER2-1

* AMPLIFIERS TO BE COUNT CAPABLE

COMMISSION NO. 01-079-123

TED M. ANDREWS REGISTERED No. 60920252 STATE OF INDIANA PROFESSIONAL ENGINEER

RECOMMENDED FOR APPROVAL — DESIGN ENGINEER — DATE 2-15-08

DESIGNED: TMA — DRAWN: BGM

CHECKED: JEL — CHECKED: TMA

INDIANA
DEPARTMENT OF TRANSPORTATION

TRAFFIC SIGNAL MODERNIZATION
SR 26 AT PARK EAST BLVD.
LAYFAYETTE, TIPPECANOE COUNTY
CRAWFORDSVILLE DISTRICT

HORIZONTAL SCALE	BRIDGE FILE
1" = 20'	
VERTICAL SCALE	DESIGNATION
None	0300233
SURVEY BOOK	SHEETS
17135	61 of 136
CONTRACT	PROJECT
IR-29162	IM-65-6(063)

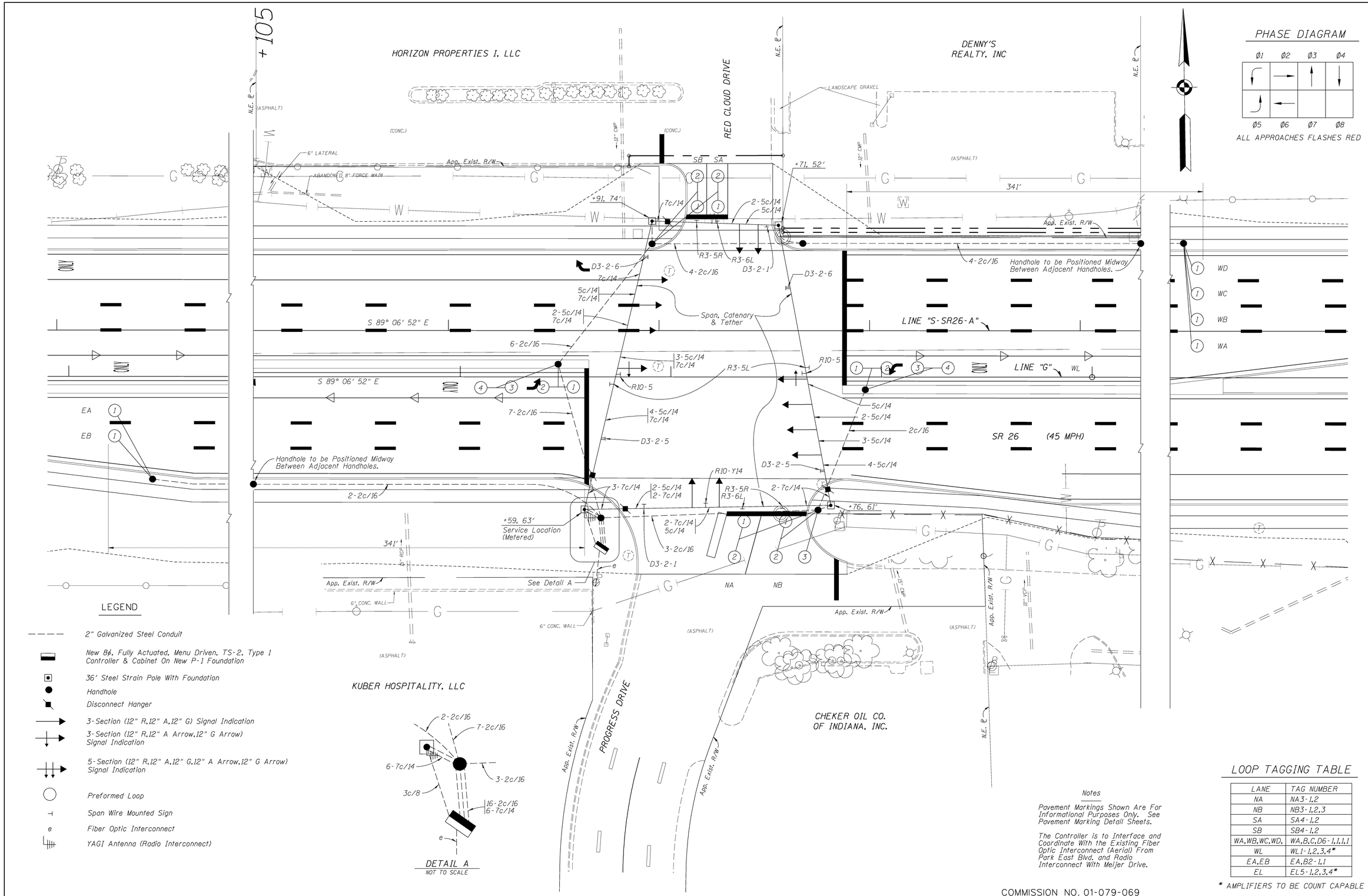

LOOP TAGGING TABLE

LANE	TAG NUMBER
NA	NA3-1,2
NB	NB3-1,2,3
SA	SA4-1,2
SB	SB4-1,2
WA,WB,WC,WD,	WA,B,C,D6-1,1,1,1
WL	WL1-1,2,3,4*
EA,EB	EA,B2-1,1
EL	EL5-1,2,3,4*

* AMPLIFIERS TO BE COUNT CAPABLE

Notes

Pavement Markings Shown Are For Informational Purposes Only. See Pavement Marking Detail Sheets.

The Controller is to Interface and Coordinate With the Existing Fiber Optic Interconnect (Aerial) From Park East Blvd. and Radio Interconnect With Meijer Drive.

COMMISSION NO. 01-079-069

TED M. ANDREWS REGISTERED No. 60920252 STATE OF INDIANA PROFESSIONAL ENGINEER

RECOMMENDED FOR APPROVAL _____ DESIGN ENGINEER 2-15-08 DATE

DESIGNED: TMA DRAWN: BGM

CHECKED: JL CHECKED: TMA

INDIANA DEPARTMENT OF TRANSPORTATION

TRAFFIC SIGNAL MODERNIZATION
SR 26 AT PROGRESS DRIVE
LAFAYETTE, TIPPECANOE COUNTY
CRAWFORDSVILLE DISTRICT

HORIZONTAL SCALE	BRIDGE FILE
1" = 20'	
VERTICAL SCALE	DESIGNATION
None	0300233
SURVEY BOOK	SHEETS
17135	62 of 136
CONTRACT	PROJECT
IIR-29162	IM-65-6(063)

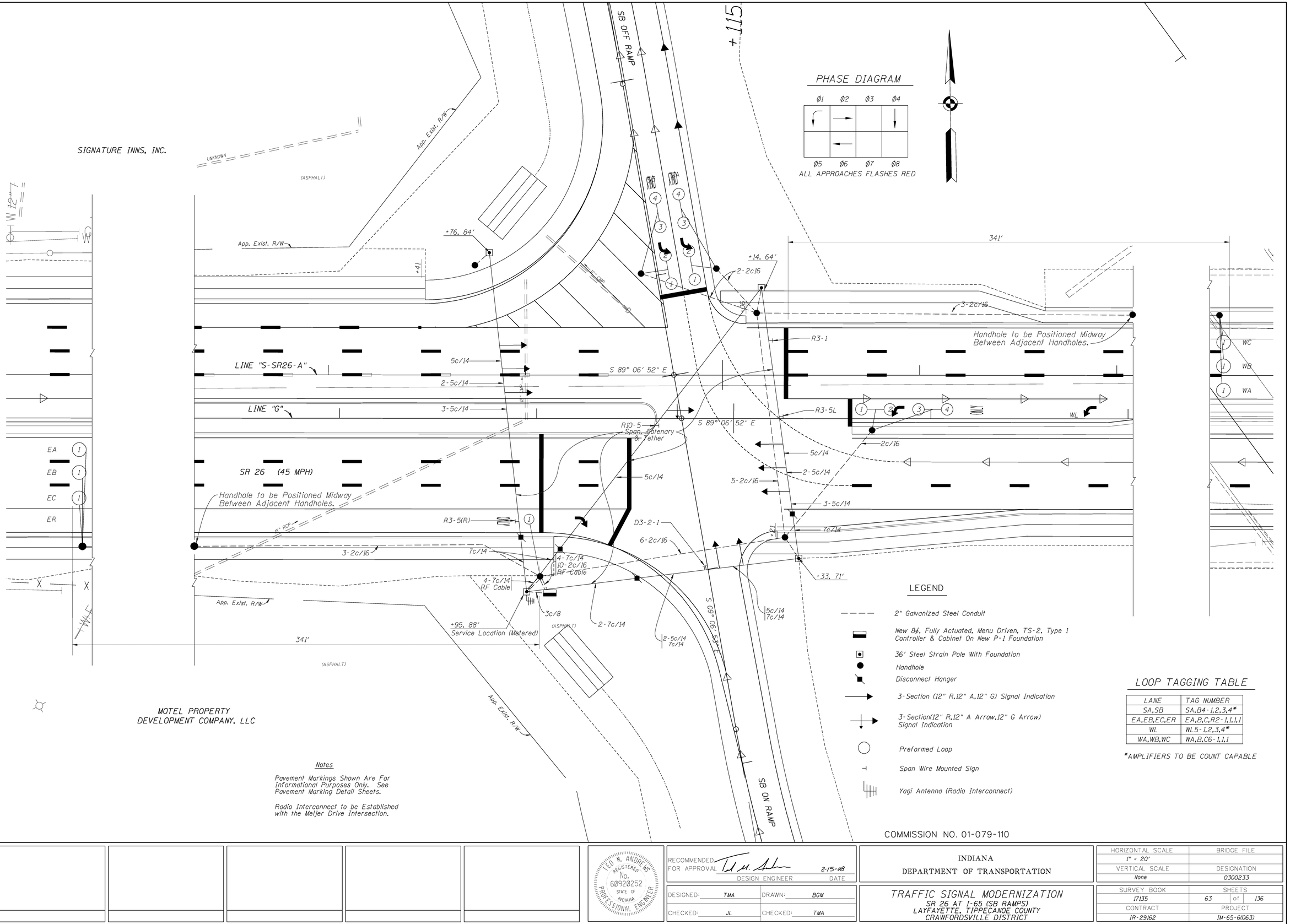

PHASE DIAGRAM

Ø1	Ø2	Ø3	Ø4
Ø5	Ø6	Ø7	Ø8

ALL APPROACHES FLASHES RED

LEGEND

- 2" Galvanized Steel Conduit
- New 8¼, Fully Actuated, Menu Driven, TS-2, Type 1 Controller & Cabinet On New P-1 Foundation
- 36' Steel Strain Pole With Foundation
- Handhole
- Disconnect Hanger
- 3-Section (12" R,12" A,12" G) Signal Indication
- 3-Section(12" R,12" A Arrow,12" G Arrow) Signal Indication
- Preformed Loop
- Span Wire Mounted Sign
- Yagi Antenna (Radio Interconnect)

LOOP TAGGING TABLE

LANE	TAG NUMBER
SA,SB	SA,B4-1,2,3,4*
EA,EB,EC,ER	EA,B,C,R2-1,1,1,1
WL	WL5-1,2,3,4*
WA,WB,WC	WA,B,C6-1,1,1

*AMPLIFIERS TO BE COUNT CAPABLE

Notes

Pavement Markings Shown Are For Informational Purposes Only. See Pavement Marking Detail Sheets.

Radio Interconnect to be Established with the Meijer Drive Intersection.

COMMISSION NO. 01-079-110

LEO M. ANDRIENS REGISTERED No. 60920252 STATE OF INDIANA PROFESSIONAL ENGINEER

RECOMMENDED FOR APPROVAL — DESIGN ENGINEER — DATE 2-15-08

DESIGNED: TMA DRAWN: BGM

CHECKED: JL CHECKED: TMA

INDIANA
DEPARTMENT OF TRANSPORTATION

TRAFFIC SIGNAL MODERNIZATION
SR 26 AT I-65 (SB RAMPS)
LAYFAYETTE, TIPPECANOE COUNTY
CRAWFORDSVILLE DISTRICT

HORIZONTAL SCALE	BRIDGE FILE
1" = 20'	
VERTICAL SCALE	DESIGNATION
None	0300233
SURVEY BOOK	SHEETS
17135	63 of 136
CONTRACT	PROJECT
IR-29162	IM-65-6(063)

PHASE DIAGRAM

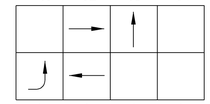

ALL APPROACHES FLASHING RED

NB ON RAMP

P.C. 1+37.66 "N E R"

App. Exist. R/W

UNIFAC 65, LLC

+125

24" RCP

12" PVC

21" RCP

App. Exist. R/W

12" Pvc

26" x 15" CMP

D3-2-1

+17, 70'

5c/14

2-5c/14

7c/14

+05, 47'

7c/14

4-2c/16

3-2c/16

Handhole to be Positioned Midway Between Adjacent Handholes.

R3-5(R)

5c/14
7c/14

LINE "A"

LINE "S-SR26-A"

2-5c/14
7c/14

Span, Catenary & Tether

S 72° 44' 39" E

3-5c/14
7c/14

R10-5

℄ Construction

341'

ELA

ELB

R10-5

5c/14
7c/14

R3-5(L)

2-5c/14

5c/14

EA

EB

2-2c/16

Handhole to be Positioned Midway Between Adjacent Handholes.

R3-1

4-2c/16

2-5c/14
7c/14

RF Cable
4-7c/16
10-2c/18

SR 26 (45 MPH)

2-2c/16

4-2c/16

2-7c/14

4-7c/14
RF Cable

12" CMP

3c/8

341'

+19, 90'
Service Location (Metered)

2c/16

+58, 117'

App. Exist. R/W

4" Vent Pipe

NA

NB

NB OFF RAMP

App. Exist. R/W

WR
WC
WB
WA

LEGEND

- 2" Galvanized Steel Conduit
- New 8⅛, Fully Actuated, Menu Driven, TS-2, Type 1 Controller & Cabinet On New P-1 Foundation
- 36' Steel Strain Pole With Foundation
- Handhole
- Disconnect Hanger
- 3-Section (12" R,12" A,12" G) Signal Indication
- 3-Section(12" R,12" A Arrow,12" G Arrow) Signal Indication
- Preformed Loop
- YAGI Antenna (Radio Interconnect)
- Span Wire Mounted Sign

Notes

Pavement Markings Shown Are For Informational Purposes Only. See Pavement Marking Detail Sheets.

Radio Interconnect to be Established With the Meijer Drive Intersection.

TIPPECANOE COUNTY
MOTEL CORPORATION

LOOP TAGGING TABLE

LANE	TAG NUMBER
NA,NB	NA, B3-1,2,3,4*
ELA,ELB	ELA,B5-1,2,3,4*
EA,EB	EA,B2-1,1,1
WA,WB,WC,WR	WA,B,C,R6-1,1,1

* AMPLIFIERS TO BE COUNT CAPABLE

COMMISSION NO. 01-079-075

TED M. ANDREWS
REGISTERED
No. 60920252
STATE OF INDIANA
PROFESSIONAL ENGINEER

RECOMMENDED FOR APPROVAL _____ 2-15-08
DESIGN ENGINEER DATE

DESIGNED: TMA DRAWN: BGM
CHECKED: JL CHECKED: TMA

INDIANA
DEPARTMENT OF TRANSPORTATION

TRAFFIC SIGNAL MODERNIZATION
SR 26 AT I-65 (NB RAMPS)
LAFAYETTE, TIPPECANOE COUNTY
CRAWFORDSVILLE DISTRICT

HORIZONTAL SCALE	BRIDGE FILE
1" = 20'	
VERTICAL SCALE	DESIGNATION
None	0300233
SURVEY BOOK	SHEETS
17135	64 of 136
CONTRACT	PROJECT
IR-29162	IM-65-6(063)

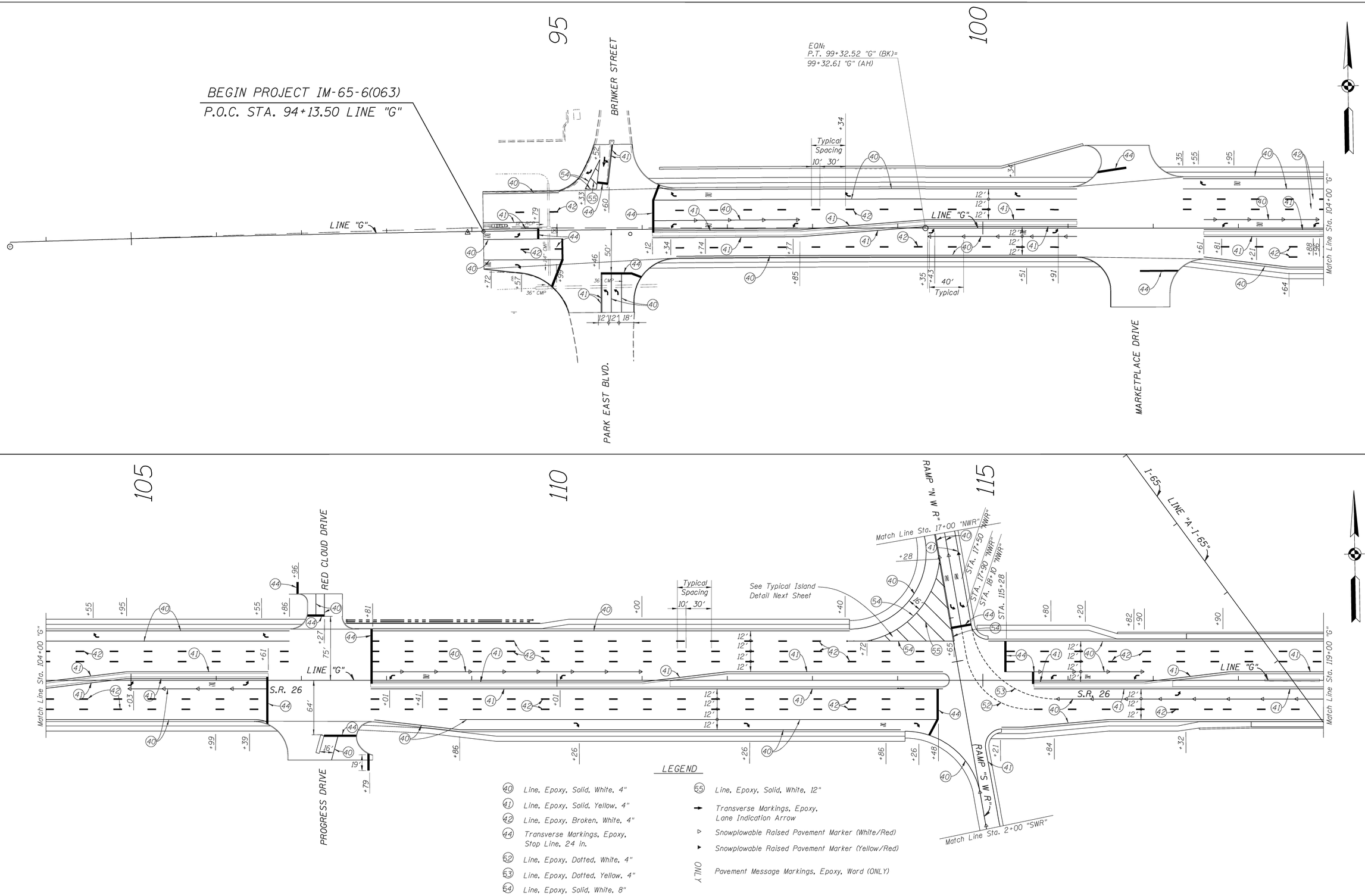

LEGEND

- (40) Line, Epoxy, Solid, White, 4"
- (41) Line, Epoxy, Solid, Yellow, 4"
- (42) Line, Epoxy, Broken, White, 4"
- (44) Transverse Markings, Epoxy, Stop Line, 24 in.
- (52) Line, Epoxy, Dotted, White, 4"
- (53) Line, Epoxy, Dotted, Yellow, 4"
- (54) Line, Epoxy, Solid, White, 8"
- (55) Line, Epoxy, Solid, White, 12"
- Transverse Markings, Epoxy, Lane Indication Arrow
- Snowplowable Raised Pavement Marker (White/Red)
- Snowplowable Raised Pavement Marker (Yellow/Red)
- ONLY — Pavement Message Markings, Epoxy, Word (ONLY)

JEFFREY L. LAZELL REGISTERED No. 860163 STATE OF INDIANA PROFESSIONAL ENGINEER

RECOMMENDED FOR APPROVAL _____ DESIGN ENGINEER 2-15-08 DATE

DESIGNED: JEL DRAWN: FJ

CHECKED: TA CHECKED: JEL

INDIANA DEPARTMENT OF TRANSPORTATION

PAVEMENT MARKING DETAILS
STA. 95+00 TO STA. 119+00 "G"

HORIZONTAL SCALE	BRIDGE FILE
1" = 50'-0"	
VERTICAL SCALE	DESIGNATION
	9802780
SURVEY BOOK	SHEETS
17135	65 of 136
CONTRACT	PROJECT
IR-29162	IM-65-6(063)

120 125 130

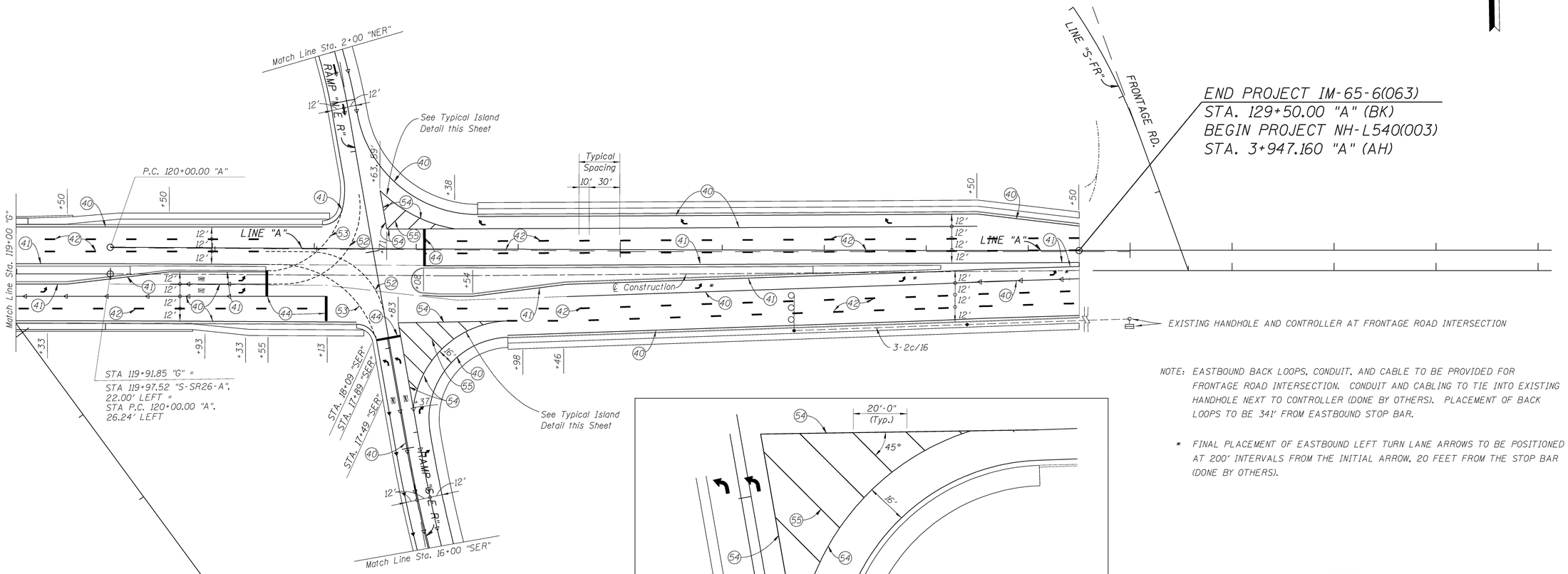

ISLAND DETAIL
1"=20'

NOTE: EASTBOUND BACK LOOPS, CONDUIT, AND CABLE TO BE PROVIDED FOR FRONTAGE ROAD INTERSECTION. CONDUIT AND CABLING TO TIE INTO EXISTING HANDHOLE NEXT TO CONTROLLER (DONE BY OTHERS). PLACEMENT OF BACK LOOPS TO BE 341' FROM EASTBOUND STOP BAR.

* FINAL PLACEMENT OF EASTBOUND LEFT TURN LANE ARROWS TO BE POSITIONED AT 200' INTERVALS FROM THE INITIAL ARROW, 20 FEET FROM THE STOP BAR (DONE BY OTHERS).

LEGEND

- (40) Line, Epoxy, Solid, White, 4"
- (41) Line, Epoxy, Solid, Yellow, 4"
- (42) Line, Epoxy, Broken, White, 4"
- (44) Transverse Markings, Epoxy, Stop Line, 24 in.
- (49) Transverse Markings, Epoxy, Stop Line, 24 in.
- (52) Line, Epoxy, Dotted, White, 4"
- (53) Line, Epoxy, Dotted, Yellow, 4"
- (54) Line, Epoxy, Solid, White, 8"
- (55) Line, Epoxy, Solid, White, 12"
- → Transverse Markings, Epoxy, Lane Indication Arrow
- ▷ Snowplowable Raised Pavement Marker (White/Red)
- ▶ Snowplowable Raised Pavement Marker (Yellow/Red)
- ONLY Pavement Message Markings, Epoxy, Word (ONLY)
- — — 2" Galvanized Steel Conduit
- • Handhole
- ○ Pre-Formed Loop

JEFFREY E. LAZZELL REGISTERED No. 860163 STATE OF INDIANA PROFESSIONAL ENGINEER

RECOMMENDED FOR APPROVAL — DESIGN ENGINEER — 2-15-08 DATE

DESIGNED: JEL DRAWN: FJ
CHECKED: TA CHECKED: JEL

INDIANA DEPARTMENT OF TRANSPORTATION

PAVEMENT MARKING DETAILS
STA. 119+00 "G" TO STA. 129+50 "A"

HORIZONTAL SCALE	BRIDGE FILE
1" = 50'-0"	
VERTICAL SCALE	DESIGNATION
	9802780
SURVEY BOOK	SHEETS
17135	66 of 136
CONTRACT	PROJECT
IR-29162	IM-65-6(063)

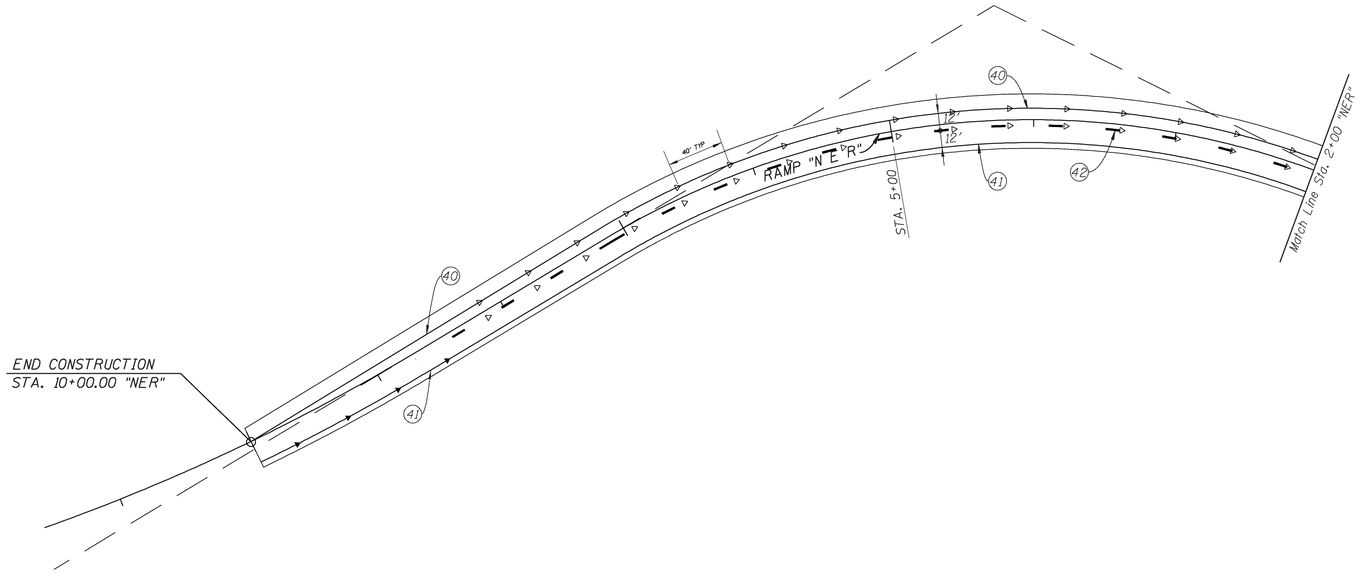

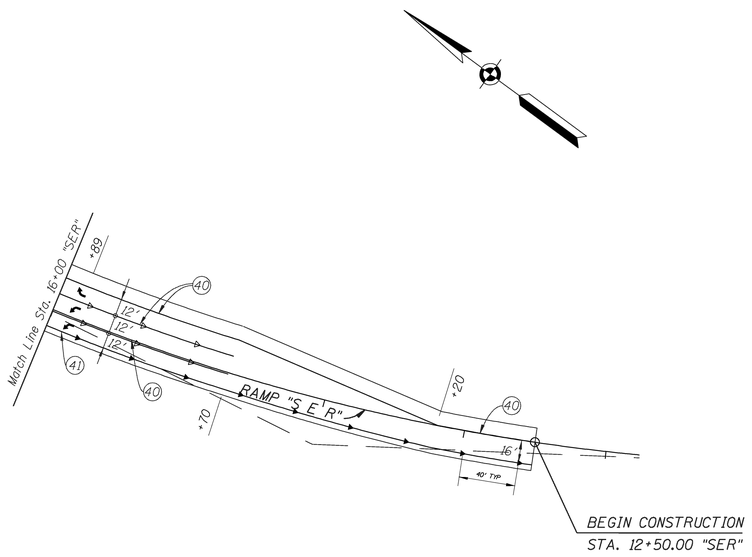

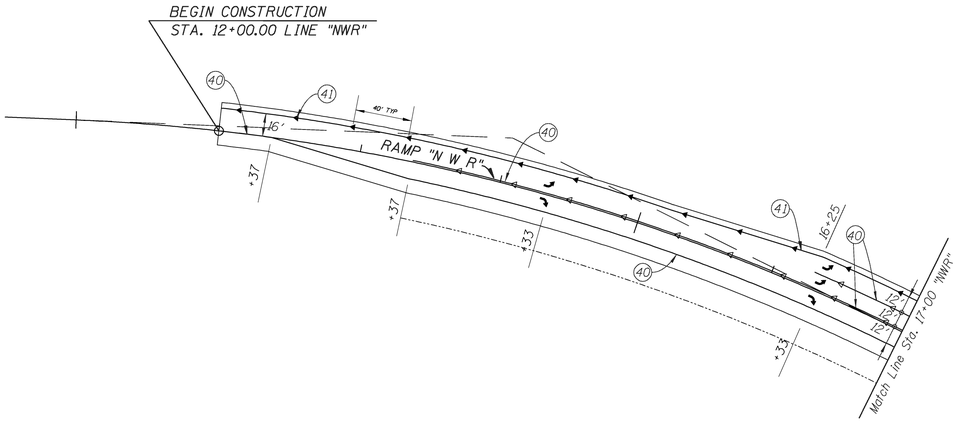

LEGEND

40	Line, Epoxy, Solid, White, 4"
41	Line, Epoxy, Solid, Yellow, 4"
42	Line, Epoxy, Broken, White, 4"
44	Transverse Markings, Epoxy, Stop Line, 24 in.
49	Transverse Markings, Epoxy, Stop Line, 24 in.
52	Line, Epoxy, Dotted, White, 4"
53	Line, Epoxy, Dotted, Yellow, 4"
54	Line, Epoxy, Solid, White, 8"
55	Line, Epoxy, Solid, White, 12"
→	Transverse Markings, Epoxy, Lane Indication Arrow
▷	Snowplowable Raised Pavement Marker (White/Red)
▸	Snowplowable Raised Pavement Marker (Yellow/Red)
ONLY	Pavement Message Markings, Epoxy, Word (ONLY)

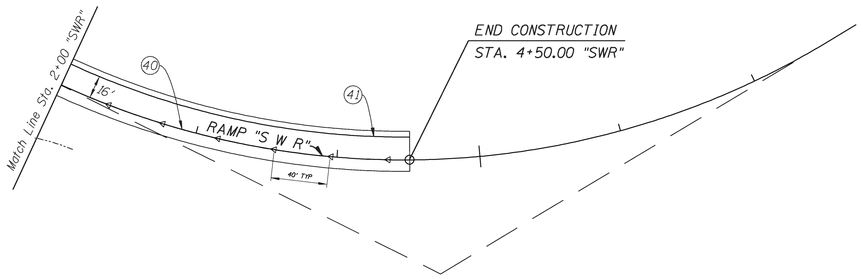

REGISTERED
JEFFREY E. LAZZELL
No. 860163
STATE OF INDIANA
PROFESSIONAL ENGINEER

RECOMMENDED FOR APPROVAL
DESIGN ENGINEER — DATE: 2-15-08

DESIGNED: JEL | DRAWN: FJ
CHECKED: TA | CHECKED: JEL

INDIANA
DEPARTMENT OF TRANSPORTATION

PAVEMENT MARKING DETAILS
RAMPS "NWR", "NER", "SWR", "SER"

HORIZONTAL SCALE	BRIDGE FILE
1" = 50'-0"	
VERTICAL SCALE	DESIGNATION
	9802780
SURVEY BOOK	SHEETS
17135	67 of 136
CONTRACT	PROJECT
IR-29162	IM-65-6(063)

PAVED SIDE DITCH, RIPRAP DITCH AND SODDING SUMMARY TABLE

From Station	To Station	Left	Median	Right	Actual Length	Paved Side Ditch					RipRap			Sodding				
						Cut Off Walls (2.4 m Equivalent Length Each)	Lugs (2.4 m Equivalent Length Each)	Total Equivalent Pay Lengths. (Type)			Revetment RipRap	Uniform RipRap	Geotextile	For Paved Side Ditch	For Ditches	For Median	For Shoulder Breaks	For Lawn
					LFT	Each	Each	LFT	LFT	LFT	Ton	Ton	SYD	SYD	SYD	SYD	SYD	SYD
S.R. 26 - Line "G"																		
94+14	95+44	x			130													122
94+14	95+12			x	98													59
95+90	101+40	x			550													1096
95+90	101+50			x	560													1101
101+95	107+05	x			510													833
102+20	106+85			x	465													1830
107+50	113+45	x			595													526
107+65	114+10			x	645													985
111+40	114+65		x		325											501		
S.R. 26 - Line "A"																		
115+00	116+60	x			160													155
115+20	117+60			x	240													123
119+50	122+15	x			265													126
120+75	122+50			x	175													75
122+95	126+90		x		395											627		
123+60	129+90	x			630													3507
123+90	129+50			x	560													2249
NER																		
2+00	7+50	x			550										891			
2+00	7+00			x	500										810			
NWR																		
546+38	561+00			x	1463										2369			
10+00	17+00			x	700										1134			
14+50	16+00	x			150						100		133					
16+00	17+50	x			150										243			
SWR																		
1+50	4+50	x			570										923			
1+50	15+00			x	1350										2187			
515+72	524+20			x	848										1374			
SER																		
13+50	17+00			x	350										567			
14+50	15+75	x			125						84		111					
15+75	17+00	x			125										203			
17+00	17+50	x			50						34		44					
17+00	17+50			x	50						34		44					
TOTALS											**252**		**333**		**10701**	**1128**		**12787**

R/W MARKER TABLE

STATION	LEFT	RIGHT	NO. REQD. EACH
LINE "G"			
107+58	69		1
109+67.4	69		1
TOTAL			2

MONUMENT TABLE

STATION	TYPE				SECTION CORNER MONUMENT
	A	B	C	D	
LINE "G"					
P.O.T. 93+95.11				1	
O.P.O.T. 94+96.96, 0.12' Lt.					1
P.O.T. 104+50				1	
P.O.T. 114+74.82				1	
LINE "A"					
P.C. 120+00				1	
1/4 Section Corner 122+01.79				1	
P.I. 125+00.04				1	
P.O.T. 129+50				1	
LINE "NER"					
P.C. 1+37.66				1	
P.T. 7+11.48				1	
P.C. 8+71.49				1	
P.O.T 10+00				1	
LINE "NWR"					
P.O.T. 12+00				1	
P.I. 14+05.24			1		
P.T. 17+01.49				1	
LINE "SWR"					
P.C. 1+82.34				1	
P.O.T. 4+50				1	
P.I. 4+95.91			1		
LINE "SER"					
P.O.T. 12+50				1	
P.I. 14+05.242			1		
P.T. 17+01.49				1	
TOTAL			**3**	**17**	**1**

JEFFREY E. LAZZELL REGISTERED No. 860163 STATE OF INDIANA PROFESSIONAL ENGINEER

RECOMMENDED FOR APPROVAL — DESIGN ENGINEER — 1/9/08 DATE

DESIGNED: MAB DRAWN: MHF

CHECKED: JEL CHECKED: MAB

INDIANA DEPARTMENT OF TRANSPORTATION

MISCELLANEOUS TABLE

DESIGNATION 9802780

SURVEY BOOK

SHEETS 68 of 136

CONTRACT IR-29162

PROJECT IM-65-6 (063)

LOCATION (STATION)	Lt./ Rt.	DESCRIPTION (APPROACH TYPE OR CLASS)	WIDTH "W"	LENGTH "L"	DISTANCE BEYOND R/W LINE	RADII " R "		GRADE (LESS THAN 10% NOT SHOWN)		EXCAVATION		HMA PATCHING			RESURFACING w/ QC/QA-HMA, 4, 76		HMA FOR APPROACHES			QC/QA PCCP - 14"	SUBBASE FOR PCCP	INTEGRAL CONCRETE CURB, TYPE C	CENTER CURB, C, CONCRETE	CONCRETE SIDEWALK - 4"	HMA FOR SIDEWALK - 4 1/2"	HMA FOR PATCHING, TYPE C	CURB, CONCRETE	INTEGRAL CONCRETE CURB, TYPE B	SUBBGRADE TREATMENT, TYPE 1A	BITUMINOUS MATERIAL FOR		PCCP FOR DRIVEWAYS	COMPACTED AGGREGATE, No. 53			COMPACTED AGGREGATE BASE	REMARKS
															SURF. 9.5mm	INTER. 19.0mm															PRIME COAT	TACK COAT						
						IN	OUT	1	2	yd³		Type A	Type B	Type C	165	275	440	1350	1615															8"	4"	6"	8"		
			ft	ft	ft	ft	ft	%	%	CUT	FILL	ton	ton	ton	ton	ton	ton	ton	ton	SYD	ton	LFT	LFT	SYS	ton	ton	LFT	LFT	SYS	ton	ton	SYS.	ton	ton	ton	ton	
Line "G"																																				
95+71	Lt.	D	44.2	53.1		50.0	50.0													406.4	201.2															
95+27	Rt.	D	77.8	58.9		67.0	50.3													709.7	351.3															
101+71	Lt.	D	57.0	43.1		40.0	40.0													344.0	170.3															
101+85	Rt.	A	69.5	57.5		40.0	40.0													516.3	255.6															
107+25	Lt.	A	40.0	22.0	31.7	20.0	20.0													203.0	100.5															
107+13	Rt.	A	85.0	45.0		40.0	20.0													473.7	234.5															
SR 26										21,552	7,390									38225.6	21563.0	7985.0	785.0	3852.0	98.0	56.0	498.0	577.0	43126.0							
Ramp "NER"										3,567	636									4382.6	2413.0								4825.0						604.0	
Ramp "NWR"										2,567	474									3393.0	1838.0								3676.0						428.0	
Ramp "SWR"										1,982	139									1321.4	747.0								1493.0						589.0	
Ramp "SER"										1,063	14									3161.4	1708.0								3415.0						378.0	
TOTAL:										30,731	8,653									53137.1	29582.3	7985.0	785.0	3852.0	98.0	56.0	498.0	577.0	56535.0						1999.0	

RECOMMENDED FOR APPROVAL — DESIGN ENGINEER — DATE 2-15-08

JEFFREY E. LAZZELL REGISTERED No. 860163 STATE OF INDIANA PROFESSIONAL ENGINEER

DESIGNED: SAF DRAWN: SAF CHECKED: JEL CHECKED: JEL

INDIANA DEPARTMENT OF TRANSPORTATION

APPROACH SUMMARY SHEET

DESIGNATION 9802780

SURVEY BOOK 17135 | SHEETS 69 of 136

CONTRACT IR-29162 | PROJECT IM-65-6( )

T:\TR\Proj\62947-I-65-SR26\excel\TABLES\[Approach(E).xls]Approach (1) 2/15/08 2:08 PM

FEDERAL ROAD REGION NO	STATE	PROJECT NO	FISCAL YEAR	SHEET NO	TOTAL SHEET
5	IND	IM-65-6 (063)		70	136

Contract No: IR-29162

UNDERDRAIN TABLE

	Underdrain Pipe Limits	UNDERDRAIN PIPE: Type 4 Pipe 4 in (ft)	UNDERDRAIN PIPE: Type 4 Pipe 6 in (ft)	UNDERDRAIN PIPE: Geotextile for Underdrains (Yd^2)	UNDERDRAIN PIPE: Aggregate for Underdrains (CY)	UNDERDRAIN PIPE: HMA for Underdrains (Ton)	UNDERDRAIN PIPE: Special Grade %	UNDERDRAIN PIPE: Flow Line Elevation @ Underdrain Pipe Limit	UNDERDRAIN PIPE: Outlet Pipe Required (Y/N)	UNDERDRAIN PIPE: Connect Underdrain Pipe to Structure No. ___	UNDERDRAIN PIPE: Structure Invert Elevation	OUTLET PIPE: 45 Degree Elbows Required (1 or 2)	OUTLET PIPE: 150 mm Outlet Pipe (ft)	OUTLET PIPE: Outlet Station	OUTLET PIPE: Outlet Elevation	OUTLET PIPE: Outlet at Outlet Protector No. ___	OUTLET PIPE: Ditch Flow Line Elevation at Outlet Protector	OUTLET PIPE: Connect Outlet Pipe to Structure No. ___	OUTLET PIPE: Structure Invert Elevation	OUTLET PIPE: B Borrow for Structure Backfill (CY)	OUTLET PIPE: HMA for Underdrains (Ton)	OUTLET PROTECTORS: Outlet Protector No. ___	OUTLET PROTECTORS: Outlet Protector Type	OUTLET PROTECTORS: Location: Outside Left	OUTLET PROTECTORS: Location: Median Left	OUTLET PROTECTORS: Location: Median Right	OUTLET PROTECTORS: Location: Outside Right	Remarks
Line "G", Line "A" LEFT	96+10							663.73																					
	97+00		90	181.8	9.9		-0.30%	663.46	N	13	662.96																		
	97+05							663.40																					
	98+00		95	191.9	10.45		-0.30%	663.11	N	15	662.61																		
	98+05							663.09																					
	99+00		95	191.9	10.45		-0.35%	662.76	N	17	662.26																		
	99+05							662.72																					
	100+00		95	191.9	10.45			662.39	N	19	661.90																		
	100+05							662.37																					
	101+00		95	191.9	10.45			662.04	N	22	661.51																		
	101+05							661.89																					
	102+50		145	292.9	15.95			661.38	N	26	660.88																		
	102+55							661.35																					
	103+50		95	191.9	10.45			661.02	N	29	660.52																		
	103+55							660.96																					
	104+85		130	262.6	14.3			660.50	N	31	660.00																		
	104+90							660.30																					
	106+78		188	379.76	20.68			659.64	N	37	659.14																		
	106+83							659.68																					
	107+95		112	226.24	12.32			659.27	N	42	658.77																		
	108+00							659.26																					
	109+50		150	303	16.5			658.75	N	45	658.25																		
	109+55							658.75																					
	111+00		145	292.9	15.95			658.24	N	50	657.74																		
	111+05							658.16																					
	112+00		95	191.9	10.45			657.83	N	51	657.33																		
	112+05							657.87																					
	113+25		120	242.4	13.2			657.45	N	55	656.95																		
	113+25							657.45																					
	113+40		15	30.3	1.65		0.20%	657.48	N	55	656.95																		
	115+09							657.35																					
	116+50		141	284.82	15.51			656.86	N	59	656.36																		
	116+55							656.84																					
	118+00		145	292.9	15.95			656.33	N	61	655.83																		
	118+05							656.31																					
	119+00		95	191.9	10.45			655.98	N	63	655.48																		
	119+05							656.06																					
	120+10		105	212.1	11.55			655.69	N	65	655.19																		
	120+15							655.75																					
	121+05		90.4	182.608	9.944			655.36	N	67	654.86																		
	121+05							655.36																					
	122+00		89.6	180.992	9.856			655.65	N	69	655.19																		
	123+75							655.56																					
	124+95		100	202	11			655.92	N	71	655.06																		
	125+05							656.35																					
	126+75		70	141.4	7.7			655.33	N	78	654.83																		
	126+80							655.60																					
	128+25		145	292.9	15.95			654.73	N	82	654.23																		
	128+30							654.75																					
	129+48		118	238.36	12.98			654.04	N	84	653.54																		
Line "G", Line "A" RIGHT	96+10							664.47																					
	97+00		90	181.8	9.9		-0.30%	664.20	N	14	663.70																		

JEFFREY E. LAILEY REGISTERED No. 860163 STATE OF INDIANA PROFESSIONAL ENGINEER

RECOMMENDED FOR APPROVAL — DESIGN ENGINEER — DATE: 2-15-08

DESIGNED: BGM — DRAWN: BGM

CHECKED: JEL — CHECKED: JEL

INDIANA DEPARTMENT OF TRANSPORTATION

UNDERDRAIN TABLE

DESIGNATION: 9802780

SURVEY BOOK

SHEETS: 70 of 136

CONTRACT: IR-29162

PROJECT: IM-65-6(063)

FEDERAL ROAD REGION NO	STATE	PROJECT NO	FISCAL YEAR	SHEET NO	TOTAL SHEET
5	IND	IM-65-6 (063)		71	136

Contract No: IR-29162

UNDERDRAIN TABLE

	UNDERDRAIN PIPE										OUTLET PIPE										OUTLET PROTECTORS						
	Underdrain Pipe Limits	Type 4 Pipe		Geotextile for Underdrains	Aggregate for Underdrains	HMA for Underdrains	Special Grade	Flow Line Elevation @ Underdrain Pipe Limit	Outlet Pipe Required	Connect Underdrain Pipe to Structure No. ___	Structure Invert Elevation	45 Degree Elbows Required (1 or 2)	150 mm Outlet Pipe	Outlet Station	Outlet Elevation	Outlet at Outlet Protector No. ___	Ditch Flow Line Elevation at Outlet Protector	Connect Outlet Pipe to Structure No. ___	Structure Invert Elevation	B Borrow for Structure Backfill	HMA for Underdrains	Outlet Protector No. ___	Outlet Protector Type	Location				Remarks
		4 in	6 in																					Outside Left	Median Left	Median Right	Outside Right	
		(ft)	(ft)	(Yd^2)	(CY)	(Ton)	%		(Y/N)				(ft)							(CY)	(Ton)							
Line "G", Line "A" RIGHT	97+05							664.15																				
	98+00		95	191.9	10.45		-0.30%	663.86	N	16	663.36																	
	98+05							663.81																				
	99+00		95	191.9	10.45		-0.30%	663.52	N	18	663.02																	
	99+05							663.18																				
	100+00		95	191.9	10.45		-0.30%	662.89	N	20	662.39																	
	100+05							662.83																				
	101+00		95	191.9	10.45		-0.30%	662.54	N	23	662.04																	
	102+64							661.76																				
	103+00		36	72.72	3.96			661.63	N	28	661.13																	
	103+05							661.34																				
	105+00		95	191.9	10.45			660.65	N	33	660.15																	
	105+05							660.63																				
	106+25		120	242.4	13.2			660.21	N	34	659.71																	
	106+30							660.15																				
	107+90		160	323.2	17.6			659.59	N	38	659.09																	
	107+95							659.21																				
	108+90		95	191.9	10.45			658.88	N	43	658.38																	
	108+95							658.89																				
	110+50		155	313.1	17.05			658.35	N	49	657.85																	
	110+55							658.37																				
	112+00		145	292.9	15.95			657.83	N	52	657.33																	
	112+05							657.93																				
	113+50		145	292.9	15.95			657.42	N	57	656.92																	
	113+50							657.42																				
	114+05		55	111.1	6.05		0.35%	657.61	N	57	656.92																	
	115+24							657.31																				
	116+50		126	254.52	13.86			656.86	N	60	656.36																	
	116+55							656.84																				
	118+00		145	292.9	15.95			656.33	N	62	655.83																	
	118+05							656.31																				
	119+00		95	191.9	10.45			655.98	N	64	655.48																	
	119+05							656.06																				
	120+10		105	212.1	11.55			655.69	N	66	655.19																	
	120+15							655.48																				
	121+05		90.4	182.608	9.944			655.17	N	68	654.67																	
	121+05							655.17																				
	121+95		89.6	180.992	9.856			655.44	N	68	654.67																	
	122+00							655.69																				
	122+36		36	72.72	3.96			655.80	N	70	655.19																	
	124+00							655.99																				
	124+95		95	191.9	10.45			656.28	N	75	655.49																	
	125+05							656.71																				
	127+00		95	191.9	10.45			655.54	N	81	655.04																	
	127+05							655.81																				
	128+25		120	242.4	13.2			655.09	N	83	654.59																	
	128+30							654.75																				
	129+48		118	238.36	12.98			654.04	N	85	653.54																	
Ramp "NER" LEFT	0+41							654.94																				
	1+50		116	234.32	12.76			654.11	Y			2	26	01+49.5	653.96	1	653.46					1	I	X				

JEFFREY L. LAZZELL REGISTERED No. 860163 STATE OF INDIANA PROFESSIONAL ENGINEER

RECOMMENDED FOR APPROVAL _____ DESIGN ENGINEER — DATE 2-15-08

DESIGNED: BGM DRAWN: BGM

CHECKED: JEL CHECKED: JEL

INDIANA DEPARTMENT OF TRANSPORTATION

UNDERDRAIN TABLE

	DESIGNATION
	9802780
SURVEY BOOK	SHEETS
	71 of 136
CONTRACT	PROJECT
IR-29162	IM-65-6(063)

FEDERAL ROAD REGION NO	STATE	PROJECT NO	FISCAL YEAR	SHEET NO	TOTAL SHEET
5	IND	IM-65-6 (063)		72	136

Contract No: IR-29162

UNDERDRAIN TABLE

	UNDERDRAIN PIPE										OUTLET PIPE										OUTLET PROTECTORS						
	Underdrain Pipe Limits	Type 4 Pipe		Geotextile for Underdrains	Aggregate for Underdrains	HMA for Underdrains	Special Grade	Flow Line Elevation @ Underdrain Pipe Limit	Outlet Pipe Required	Connect Underdrain Pipe to Structure No. ___	Structure Invert Elevation	45 Degree Elbows Required (1 or 2)	150 mm Outlet Pipe	Outlet Station	Outlet Elevation	Outlet at Outlet Protector No. ___	Ditch Flow Line Elevation at Outlet Protector	Connect Outlet Pipe to Structure No. ___	Structure Invert Elevation	B Borrow for Structure Backfill	HMA for Underdrains	Outlet Protector No. ___	Outlet Protector Type	Location				Remarks
		4 in	6 in																					Outside Left	Median Left	Median Right	Outside Right	
		(ft)	(ft)	(Yd^2)	(CY)	(Ton)	%		(Y/N)				(ft)							(CY)	(Ton)							
Ramp "NER" LEFT	01+50.5		350					654.11																				
	05+00			707	38.5		0.41%	655.56	Y			2	26	01+50.5	653.96	1	653.46					1	I	X				
	05+00		200					656.32																				
	07+00			404	22		0.62%	657.56	Y			2	20	05+00	656.26	2	655.76					2	I	X				
	07+00		300					658.71																				
	10+00			606	33		0.55%	660.35	Y			2	20	07+00	658.62	3	658.12					3	I	X				
Ramp "NER" RIGHT	00+29		163					655.18																				
	01+49.5			329.26	17.93		-0.20%	654.85	Y			2	30	01+49.5	654.76	4	652.52					4	I				X	
	01+50.5		350					654.85																				
	05+00			707	38.5		0.73%	657.42	Y			2	30	01+50.5	654.76	4	652.52					4	I				X	
	05+00		200					657.98																				
	07+00			404	22		0.21%	658.40	Y			2	25	05+00	657.90	5	657.40					5	I				X	
	07+00		300					658.64																				
	10+00			606	33		0.20%	659.24	Y			2	25	07+00	658.57	6	658.07					6	I				X	
Ramp "NWR" LEFT	12+00		350					663.47																				
	15+50			707	38.5		-0.28%	660.05	Y			2	27	15+50	659.97	7	659.00					7	I	X				
	15+50		150					660.05																				
	16+99.5			303	16.5		-3.04%	658.57	Y			2	22	16+99.5	658.50	8	658.00					8	I	X				
	16+99.5		126					658.57																				
	18+25.2			254.52	13.86		0.20%	658.82	Y			2	22	16+99.5	668.50	8	668.00					8	I	X				
Ramp "NWR" RIGHT	12+00		350					662.11																				
	15+50			707	38.5		-0.65%	661.13	Y			2	23	13+50	661.06	9	655.20					9	I				X	
	15+50		150					661.13																				
	16+99.5			303	16.5		-1.30%	656.57	Y			2	23	16+99.5	656.50	10	656.00					10	I				X	
	16+99.5		137					656.57																				
	17+81.2			276.74	15.07		0.20%	656.84	Y			2	23	16+99.5	656.50	10	656.00					10	I				X	
Ramp "SWR" LEFT	00+84.8		145					657.27																				
	01+74.5			292.9	15.95		-0.37%	656.74	N			2																
	01+75.5		200					656.74																				
	03+50			404	22		0.34%	657.41	N			2																
	03+50		100					657.86																				
	04+50			202	11		0.20%	658.06	Y			2	21	03+50	657.80	11	657.30					11	I	X				
Ramp "SWR" RIGHT	00+81		95					657.45																				X
	01+74.5			191.9	10.45		-0.20%	657.26	Y			2	29	02+74.5	656.66	12	656.00					12	I					
	01+75.5		175					657.26																				
	03+50			353.5	19.25		0.58%	658.28	Y			2	29	02+75.5	656.66	12	656.00					12	I				X	
	03+50		100					658.28																				
	04+50			202	11		0.38%	658.66	Y			2	28	03+50	658.20	13	655.78					13	I				X	
Ramp "SER" LEFT	12+50		325					662.96																				
	15+75			656.5	35.75		-1.82%	657.06	Y			2	22	15+75	657.00	14	656.50					14	I	X				
	15+75		167					657.40																				
	17+42			337.34	18.37		0.89%	655.76	Y			2	27	17+42	654.02	15	653.52					15	I	X				
	17+42		73					655.76																				
	18+15			147.46	8.03		0.30%	655.97	Y			2	27	17+42	654.02	15	653.52					15	I	X				
Ramp "SER" RIGHT	12+50		100					661.61																				
	13+50			202	11		-0.83%	660.78	Y			2	22	13+50	659.33	16	658.83					16	I				X	
	13+50		225					660.78																				
	15+75			454.5	24.75		-1.86%	656.60	Y			2	23	15+75	656.03	17	655.53					17	I				X	
	15+75		167					655.49																				
	17+42			337.34	18.37		-0.20%	655.16	Y			2	24	17+42	653.60	18	653.60					18	I				X	

JEFFREY E. LAZZELL
REGISTERED
No. 860163
STATE OF INDIANA
PROFESSIONAL ENGINEER

RECOMMENDED FOR APPROVAL _____ DESIGN ENGINEER — DATE 2-15-08

DESIGNED: BGM — DRAWN: BGM

CHECKED: JEL — CHECKED: JEL

INDIANA DEPARTMENT OF TRANSPORTATION

UNDERDRAIN TABLE

	DESIGNATION
	9802780

SURVEY BOOK	SHEETS
	72 of 136
CONTRACT	PROJECT
IR-29162	IM-65-6(063)

FEDERAL ROAD REGION NO	STATE	PROJECT NO	FISCAL YEAR	SHEET NO	TOTAL SHEET
5	IND	IM-65-6 (063)		73	136

Contract No: IR-29162

UNDERDRAIN TABLE

	UNDERDRAIN PIPE										OUTLET PIPE										OUTLET PROTECTORS						
		Type 4 Pipe																					Location				
	Underdrain Pipe Limits	4 in (ft)	6 in (ft)	Geotextile for Underdrains (Yd^2)	Aggregate for Underdrains (CY)	HMA for Underdrains (Ton)	Special Grade %	Flow Line Elevation @ Underdrain Pipe Limit	Outlet Pipe Required (Y/N)	Connect Underdrain Pipe to Structure No. ___	Structure Invert Elevation	45 Degree Elbows Required (1 or 2)	6" Outlet Pipe (ft)	Outlet Station	Outlet Elevation	Outlet at Outlet Protector No. ___	Ditch Flow Line Elevation at Outlet Protector	Connect Outlet Pipe to Structure No. ___	Structure Invert Elevation	B Borrow for Structure Backfill (CY)	HMA for Underdrains (Ton)	Outlet Protector No. ___	Outlet Protector Type	Outside Left	Median Left	Median Right	Outside Right	Remarks
Ramp "SER" RIGHT																											
	17+42		37					655.83																			
	17+79			74.74	4.07		0.30%	655.16	Y			2	24.00	17+42	655.09	18	653.60					18	I				X	
		SUBTOTALS																									
		SHEET 1	2854	5765.08	313.94							0	0														
		SHEET 2	2617	5286.34	287.87							2	26														
		SHEET 3	4998	10095.96	549.78							50	568														
		THIS SHEET	37	74.74	4.07							2	24														
		GRAND TOTALS	**10506**	**21222.12**	**1155.66**							**54**	**618**														

JEFFREY E. LAZZELLE
REGISTERED
No. 86Ø163
STATE OF INDIANA
PROFESSIONAL ENGINEER

RECOMMENDED FOR APPROVAL _____ DESIGN ENGINEER — DATE 2-15-08

DESIGNED: BGM — DRAWN: BGM

CHECKED: JEL — CHECKED: JEL

INDIANA
DEPARTMENT OF TRANSPORTATION

UNDERDRAIN TABLE

	DESIGNATION
	9802780
SURVEY BOOK	SHEETS
	73 of 136
CONTRACT	PROJECT
IR-29162	IM-65-6(063)

STRUCTURE NUMBER	STATION	LEFT	RIGHT	CROSS	SIZE	PIPE TYPE	MANHOLE, CATCH BASIN, INLET, OR SPECIALTY STRUCTURE	LENGTH	SKEW	COVER	FLOWLINE UP STREAM	FLOWLINE DOWN STREAM	CASTING	SERVICE LIFE	SITE DESIGNATION	pH	BACKFILL METHOD	STRUCTURAL BACKFILL	RIVETMENT RIPRAP	GEOTEXTILE	PIPE END SECTION	GRATED BOX END SECTION			SAFETY METAL END SECTION		CONNECT TO STR.	REMARKS
LINE "G"					in			ft	DEG.	ft	ELEV.	ELEV.	ELEV.	yr				yd^3	Sys	Sys	EACH	TYPE	SLOPE	EACH	SLOPE	EACH		
10	95+87.6	X			12	2	Inlet, J10	62		0.6	663.40	663.18	666.20	75	N	7	1	10.9									12	
11	95+87		X		12	2	Inlet, J10	22		0.4	665.72	665.50	667.14	75	N	7	1	3.3			1							
12	96+35	X			12	2	Manhole, C4	63		1.3	663.18	662.96	666.67	75	N	7	1	16.5									13	
13	97+00	X			12	2	Inlet, M10	100		1.3	662.96	662.61	666.38	75	N	7	1	25.3									15	
14	97+00		X		12	2	Inlet, J10	24		2.3	663.70	663.58	667.05	75	N	7	1	9.5			1							
15	98+00	X			12	2	Inlet, M10	100		1.3	662.61	662.26	666.03	75	N	7	1	25.3									17	
16	98+00		X		12	2	Inlet, J10	24		2.4	663.36	663.24	666.71	75	N	7	1	9.5			1							
17	99+00	X			15	2	Inlet, M10	100		1.0	662.26	661.90	665.68	75	N	7	1	26.5									19	
18	99+00		X		12	2	Inlet, J10	24		2.4	663.02	662.90	666.37	75	N	7	1	9.5			1							
19	100+00	X			15	2	Inlet, M10	100		1.0	661.90	661.55	665.32	75	N	7	1	26.5									22	
20	100+00		X		12	2	Inlet, J10	25		2.4	662.39	662.27	665.74	75	N	7	1	9.9			1							
21	101+00	X			12	2	Catch Basin, E7	22		1.0	661.60	661.51	663.60	75	N	7	1	4.9									22	
22	101+00	X			15	2	Inlet, M10	26		1.0	661.51	661.00	664.97	75	N	7	1	7.0									24	
23	101+00		X		12	2	Inlet, J10	24		2.4	662.04	661.82	665.39	75	N	7	1	9.5			1							
24	101+25	X			24	2	Manhole, C4	126		0.3	661.00	660.56	664.50	75	N	7	1	36.2									27	
25	102+00		X		36	1	Pipe	172		1	660.48	659.97		75	N	7	2	40			2							
26	102+50	X			12	2	Inlet, J10	6		1.0	660.88	660.56	664.09	75	N	7	1	1.4									27	
27	102+50	X			24	2	Manhole, C4	235		0.7	660.56	659.75	664.44	75	N	7	1	83.2									32	
28	103+00		X		12	2	Inlet, J10	22		2.4	661.13	660.91	664.55	75	N	7	1	8.9			1							
29	103+50	X			15	2	Inlet, J10	135		0.8	660.52	660.00	663.73	75	N	7	1	31.9									31	
30	104+85	X			12	2	Pipe	40		1.5	662.80	660.00		75	N	7	1	11.4									31	
31	104+85	X			15	2	Inlet, M10	6		0.8	660.00	659.75	663.21	75	N	7	1	1.4									32	
32	104+85	X			24	2	Manhole, C4	465		1.6	659.75	658.13	664.50	75	N	7	1	237.1									46	
33	105+00		X		12	2	Inlet, J10	22		2.4	660.15	659.93	663.57	75	N	7	1	8.9			1							
34	106+25		X		12	2	Inlet, J10	22		2.4	659.71	659.49	663.13	75	N	7	1	8.9			1							
35	106+50		X		29 x 45	2	Pipe	145		2.4	658.85	657.65		75	N	7	1	170.4			1						39	Horz. Ellip
36	106+78	X			12	2	Pipe	40		2.7	662.50	659.14		75	N	7	1	17.7									37	
37	106+78	X			12	2	Inlet, M10	122		1.6	659.14	658.77	662.86	75	N	7	1	35.6									42	
38	107+90		X		12	2	Inlet, M10	6		1.3	659.09	658.04	662.51	75	N	7	1	1.5									39	
39	107+90		X		29 x 45	2	Manhole, D4	111		1.2	658.04	657.71	662.85	75	N	7	1	91.7									44	Horz. Ellip
40	108+03.5		X		15	2	Pipe	40		2.2	660.60	659.09		75	N	7	1	17.3									38	
41	107+95	X			12	2	Pipe	8		1.1	660.62	658.25		75	N	7	1	1.9									42	
42	107+95	X			15	2	Inlet, M10	150		1.0	658.77	658.25	662.15	75	N	7	1	38.9									20	
43	108+90		X		12	2	Inlet, J10	13		1.3	658.38	657.71	661.80	75	N	7	1	3.3									44	
44	109+00		X		29 x 45	2	Manhole, D4	150		0.9	657.71	657.26	662.19	75	N	7	1	109.4									48	Horz. Ellip
45	109+50	X			15	2	Inlet, M10	6		1.0	658.25	657.44	661.63	75	N	7	1	1.6									46	
46	109+50	X			24 x 38	2	Manhole, D4	390		1.9	657.44	656.27	662.50	75	N	7	1	310.8									56	Horz. Ellip
47	109+66.8		X		12	2	Pipe	25		1.8	660.10	657.51		75	N	7	1	8.1										T connection Req'd.
48	110+50		X		29 x 45	2	Manhole, D4	310		1.2	657.26	656.80	662.00	75	N	7	1	249.6									58	Horz. Ellip
49	110+50		X		12	2	Inlet, J10	6		1.3	657.85	657.26	661.27	75	N	7	1	1.5									48	
50	111+00	X			12	2	Inlet, J10	100		1.2	657.74	657.33	661.10	75	N	7	1	24.6									51	

STRUCTURE NUMBER	STATION	LEFT	RIGHT	CROSS	SIZE	PIPE TYPE	MANHOLE, CATCH BASIN, INLET, OR SPECIALTY STRUCTURE	LENGTH	SKEW	COVER	FLOWLINE UP STREAM	FLOWLINE DOWN STREAM	CASTING	SERVICE LIFE	SITE DESIGNATION	pH	BACKFILL METHOD	STRUCTURAL BACKFILL	RIVETMENT RIPRAP	GEOTEXTILE	PIPE END SECTION	GRATED BOX END SECTION			SAFETY METAL END SECTION		CONNECT TO STR.	REMARKS
					in			ft	DEG.	ft	ELEV.	ELEV.	ELEV.	yr				yd^3	Sys	Sys	EACH	TYPE	SLOPE	EACH	SLOPE	EACH		
51	112+00	X			15	2	Inlet, M10	125		1.1	657.33	656.95	660.86	75	N	7	1	35.0									55	
52	112+00		X		12	2	Inlet, M10	150		1.3	657.33	656.92	660.75	75	N	7	1	38.0									57	
53	112+04.6		X		12	2	Manhole, C4	28		2.3	658.00	657.33		75	N	7	1	10.9									54	
54	112+12		X		12	2	Pipe	3		1.8	660.10	660.00	662.91	75	N	7	1	1.0									52	
55	113+25	X			15	2	Inlet, M10	16		1.2	656.95	656.27	660.60	75	N	7	1	4.7									56	
56	113+40	X			24 x 38	2	Manhole, D4	56		2.5	656.27	656.10	660.73	75	N	7	1	52.7	62	86					6:1	1		Horz. Ellip
57	113+50		X		15	2	Inlet, M10	12		1.6	656.92	656.33	660.98	75	N	7	1	4.2									58	
58	113+60		X		29 x 45	2	Manhole, D4	77		2.3	656.33	656.10	661.08	75	N	7	1	88.9	62	86	1							Horz. Ellip
59	116+50	X			12	2	Inlet, J10	150		1.1	656.36	655.83	659.59	75	N	7	1	34.4									61	
60	116+50		X		12	2	Inlet, J10	150		1.3	656.36	655.83	659.81	75	N	7	1	38.6									62	
61	118+00	X			12	2	Inlet, M10	100		1.0	655.83	655.48	659.00	75	N	7	1	22.2									63	
62	118+00		X		12	2	Inlet, M10	100		1.0	655.83	655.48	659.00	75	N	7	1	22.2									64	
63	119+00	X			15	2	Inlet, M10	110		0.8	655.48	655.19	658.65	75	N	7	1	25.4									65	
64	119+00		X		15	2	Inlet, M10	110		0.8	655.48	655.19	658.65	75	N	7	1	25.4									66	
LINE "A"																												
65	120+10	X			15	2	Inlet, M10	95		0.8	655.19	654.86	658.36	75	N	7	1	21.9									67	
66	120+10		X		15	2	Inlet, M10	95		0.8	655.19	654.67	658.36	75	N	7	1	21.9									68	
67	121+05	X			18	2	Inlet, C15	18		1.8	654.86	654.66	658.12	75	N	7	1	7.6			1							
68	121+05		X		18	2	Inlet, C15	18		2.0	654.67	654.47	658.12	75	N	7	1	8.1			1							
69	122+00	X			12	2	Inlet, J10	95		1.0	655.19	654.86	658.31	75	N	7	1	20.5									67	
70	122+00		X		12	2	Inlet, J10	95		1.0	655.19	654.67	658.31	75	N	7	1	20.5									68	
71	123+75	X			12	2	Inlet, J10	24		2.8	655.06	654.50	658.88	75	N	7	1	11.0			1							
72	123+90		X		36	2	Pipe	24		3.5	653.50	653.40		75	N	7	1	33.3									76	
73	124+00		X		12	2	Inlet, J10	17		1.8	655.84	655.75	659.79	75	N	7	1	5.5									74	
74	124+00		X		12	2	Inlet, M10	52		1.5	655.75	655.49	659.41	75	N	7	1	14.8									75	
75	124+00		X		12	2	Inlet, M10	16		2.4	655.49	655.46	658.84	75	N	7	1	6.3									76	
76	124+00		X		36	1	Manhole, D4	450		3.6	653.40	652.05	660.00	75	N	7	2	104			1							
77	125+00	X			36	1	Pipe	450		5.3	652.85	651.50	660.00	75	N	7	2	104			2							
78	126+75	X			12	2	Inlet, J10	150		1.7	654.83	654.23	658.73	75	N	7	1	47.2									82	
79	127+00		X		12	2	Inlet, J10	7		1.8	655.35	655.31	659.34	75	N	7	1	2.3									80	
80	127+00		X		12	2	Inlet, M10	53		1.7	655.31	655.04	659.17	75	N	7	1	16.4									81	
81	127+00		X		12	2	Inlet, M10	125		1.3	655.04	654.59	658.46	75	N	7	1	31.7									83	
82	128+25	X			15	2	Inlet, M10	123		1.0	654.23	653.54	657.68	75	N	7	1	33.1									84	
83	128+25		X		15	2	Inlet, M10	123		0.7	654.59	653.54	657.71	75	N	7	1	27.5									85	
84	129+48	X			15	2	Inlet, M10	22		2.2	653.54	653.00	656.96	75	N	7	1	9.4			1							
85	129+48		X		15	2	Inlet, M10	24		2.2	653.54	653.00	656.96	75	N	7	1	10.3			1							
RAMP "NER"																												
86	1+27.4 "NER"			X	24	1	Pipe	63		2.4	654.30	653.67	658.04	75	A	7	2	7							6:1	2		
RAMP "NWR"																												
87	16+00"NWR"			X	24	1	Pipe	102		2.4	657.00	655.70	661.47	75	A	7	2	11							6:1	2		
RAMP "SER"																												
88	17+50"SER"			X	36	1	Pipe	97		1	654.02	653.60	658.86	75	A	7	2	22							6:1	2		

JEFFREY E. LAZZELL REGISTERED No. 860163 STATE OF INDIANA PROFESSIONAL ENGINEER

RECOMMENDED FOR APPROVAL: Jeffrey E. Lazzell — DESIGN ENGINEER — DATE 1-9-08

DESIGNED: SAF DRAWN: TMA
CHECKED: JEL CHECKED: JEL

INDIANA DEPARTMENT OF TRANSPORTATION

STRUCTURE DATA SHEET

DESIGNATION: 9802780
SURVEY BOOK: 17135
SHEETS: 74 of 136
CONTRACT: IR-29162
PROJECT: IM - 65 - 69(063)

T:\TR\Proj\62947-I-65-SR26\excel\TABLES\[STRUCTUREDATA.xls]StructureData 2/15/2008 14:24

STRUCTURE NUMBER

			10	11	12	13	14	15	16	17	18	19	20	21	22	23	24	25	26	27	28	29	30
	PIPE TYPE / SHAPE		2 / CIR	2/CIR	2/CIR	2/CIR	2/CIR	2/CIR	2/CIR	2/CIR	2/CIR	2/CIR	2/CIR	2/CIR	2/CIR	2/CIR	2/CIR	1/CIR	2/CIR	2/CIR	2/CIR	2/CIR	2
	SMOOTH PIPE SIZE		12	12	12	12	12	12	12	15	12	15	12	12	15	12	24	36	12	24	12	15	12
	CORRUGATED PIPE SIZE																						
	RCP / RCHEP (S)	Class	III	III	II	II	II	II	2	II	II	II	II	III	II	II	II	II	III	II	II	II	II
		D 0.01 Rating	1500	1500	1250	1250	1000	1250	1000	1250	1000	1250	1000	1500	1250	1000	1000	1000	1500	1000	1000	1250	1000
	NON-REINFORCED CONCRETE PIPE, CLASS 3 (S)				YES		YES		YES		YES		YES			YES					YES		YES
	CORRUGGATED PE PIPE, TYPE S * (S)						YES		YES		YES		YES			YES					YES		
	RIBBED PE PIPE (S)																						
	SMOOTH WALL PE PIPE (S)*/ MAXIMUM DR						YES/26.00		YES/26.00		YES/26.00		YES/26.00			YES/26.00					YES/26.00		
	PROFILE WALL PVC PIPE (S)*						YES		YES		YES		YES			YES					YES		
	SMOOTH WALL PVC PIPE (S)*						YES		YES		YES		YES			YES					YES		
	VITRIFIED CLAY PIPE, EXTRA STRENGTH (S)				YES	YES	YES	YES	YES		YES		YES			YES					YES		YES
CORRUGATED STEEL PIPE / PIPE ARCH	FULLY BIT. PAVED AND LINED (S)	Corr. Profile								2 2/3 x 1/2		2 2/3 x 1/2			2 2/3 x 1/2		2 2/3 x 1/2			2 2/3 x 1/2		2 2/3 x 1/2	
		Thickness								0.109		0.109			0.109		0.109			0.109		0.109	
	ZINC COATED (C)	Corr. Profile																					
		Thickness																					
	ZINC COATED WITH BPI (C)	Corr. Profile																					
		Thickness																					
	ALUM. COATED TYPE 2 (C)	Corr. Profile																					
		Thickness																					
	ALUM. COATED TYPE 2 W/ BPI (C)	Corr. Profile																					
		Thickness																					
	POLYMER PRECOATED GALVANIZED (C)	Corr. Profile															2 2/3 x 1/2	2 2/3 x 1/2		2 2/3 x 1/2			
		Thickness															0.109	0.109		0.109			
	FIBER BONDED BITUMINOUS COATED (C)	Corr. Profile																					
		Thickness																					
	FIBER BONDED BITUMINOUS COATED W/ BPI (C)	Corr. Profile																					
		Thickness																					
	CORRUGATED ALUM ALLOY PIPE (C)	Corr. Profile																					
		Thickness																					
	CORRUGATED ALUM ALLOY PIPE W/BPI (C)	Corr. Profile																					
		Thickness																					
	STR. PLATE ALUMINUM ALLOY PIPE (C)	Corr. Profile																					
		Thickness																					
	STR. PLATE ALUMINUM ALLOY PIPE W/CFP (C)	Corr. Profile																					
		Thickness																					
	STR. PLATE STEEL PIPE (C)	Corr. Profile																					
		Thickness																					
	STR. PLATE STEEL PIPE W/ CFP (C)	Corr. Profile																					
		Thickness																					

STRUCTURE NUMBER

			31	32	33	34	35	36	37	38	39	40	41	42	43	44	45	46	47	48	49	50
	PIPE TYPE / SHAPE		2/CIR	2/CIR	2/CIR	2/CIR	2/HEP	2/CIR	2/CIR	2/CIR	2/HEP	2/CIR	2/CIR	2/CIR	2/CIR	2/HEP	2/CIR	2/HEP	2/CIR	2/HEP	2/CIR	2/CIR
	SMOOTH PIPE SIZE		15	24	12	12	7.4	12	12	12	7.4	15	12	15	12	7.4	15	5.1	12	7.4	12	120
	CORRUGATED PIPE SIZE																					
	RCP / RCHEP (S)	Class	II	II	II	II	HE-A	II	II	II	HE-A	II	II	II	II	HE-A	II	HE-A	II	HE-A	II	II
		D 0.1 Rating	1250	1000	1000	1000	600	1000	1000	1250	600	1000	1250	1250	1250	600	1250	600	1000	600	1250	1250
	NON-REINFORCED CONCRETE PIPE, CLASS 3 (S)			YES	YES	YES		YES	YES			YES							YES			
	CORRUGGATED PE PIPE, TYPE S * (S)				YES	YES		YES				YES										
	RIBBED PE PIPE (S)																					
	SMOOTH WALL PE PIPE (S)*/ MAXIMUM DR				YES/26.00	YES/26.00		YES/26.00				YES/26.00										
	PROFILE WALL PVC PIPE (S)*				YES	YES		YES				YES										
	SMOOTH WALL PVC PIPE (S)*				YES	YES		YES				YES										
	VITRIFIED CLAY PIPE, EXTRA STRENGTH (S)			YES	YES	YES		YES	YES	YES		YES			YES				YES		YES	
CORRUGATED STEEL PIPE / PIPE ARCH	FULLY BIT. PAVED AND LINED (S)	Corr. Profile	2 2/3 x 1/2	2 2/3 x 1/2								2 2/3 x 1/2		2 2/3 x 1/2			2 2/3 x 1/2					
		Thickness	0.109	0.109								0.109		0.109			0.109					
	ZINC COATED (C)	Corr. Profile																				
		Thickness																				
	ZINC COATED WITH BPI (C)	Corr. Profile																				
		Thickness																				
	ALUM. COATED TYPE 2 (C)	Corr. Profile																				
		Thickness																				
	ALUM. COATED TYPE 2 W/ BPI (C)	Corr. Profile																				
		Thickness																				
	POLYMER PRECOATED GALVANIZED (C)	Corr. Profile		2 2/3 x 1/2																		
		Thickness		0.109																		
	FIBER BONDED BITUMINOUS COATED (C)	Corr. Profile																				
		Thickness																				
	FIBER BONDED BITUMINOUS COATED W/ BPI (C)	Corr. Profile																				
		Thickness																				
	CORRUGATED ALUM ALLOY PIPE (C)	Corr. Profile																				
		Thickness																				
	CORRUGATED ALUM ALLOY PIPE W/BPI (C)	Corr. Profile																				
		Thickness																				
	STR. PLATE ALUMINUM ALLOY PIPE (C)	Corr. Profile																				
		Thickness																				
	STR. PLATE ALUMINUM ALLOY PIPE W/CFP (C)	Corr. Profile																				
		Thickness																				
	STR. PLATE STEEL PIPE (C)	Corr. Profile																				
		Thickness																				
	STR. PLATE STEEL PIPE W/ CFP (C)	Corr. Profile																				
		Thickness																				

LEGEND

RCP- REINFORCED CONCRETE PIPE
PCHEP- REINFORCED CONCRETE HORIZONTAL ELLIPTICAL PIPE
PE- POLYETHYLENE
DR- DIMENSIONAL RATIO
PVC- POLYVINYL CHLORIDE
BIT- BITUMINOUS
CORR- CORRUGATION
BPI- BITUMINOUS PAVED INVERT
ALUM- ALUMINUM
STR- STRUCTURAL
CFP- CONCRETE FIELD PAVING
CIR- CIRCULAR PIPE
DEF- DEFORMED PIPE
(S)- SMOOTH PIPE
(C)- CORRUGATED PIPE MAT'L
OK- ACCEPTABLE FOR USE
(LS)- LOCK SEAM PIPE REQ'D
*- REFER TO STD DRAWING 715-PHCL-18 OR 19 FOR NOMINAL PAY ITEM DIAMETER BOTTOM PLATES SHALL BE OF NEXT GREATER AVAILABLE THICKNESS

Note: All dimensions are in mm.

2/15/2008 14:30

T:\TR\Proj\62947-I-65-SR26\excel\[Pipe Material (E).xls]Pipe Material (2)

JEFFREY E. LAZZELL REGISTERED No. 860163 STATE OF INDIANA PROFESSIONAL ENGINEER

RECOMMENDED FOR APPROVAL [signature] 1-9-08
DESIGN ENGINEER DATE

DESIGNED: MAB DRAWN: DMS
CHECKED: JEL CHECKED: MHF

INDIANA DEPARTMENT OF TRANSPORTATION

PIPE MATERIAL SHEET

	DESIGNATION
	9802780
SURVEY BOOK	SHEETS
	75 of 136
CONTRACT	PROJECT
IR-29162	IM-65-6 (063)

		STRUCTURE NUMBER																				
		51	52	53	54	55	56	57	58	59	60	61	62	63	64	65	66	67	68	69	70	71
PIPE TYPE / SHAPE		2/CIR	2/CIR	2/CIR	2/CIR	2/CIR	2/HEP	2/CIR	2/HEP	2/CIR	2/CIR	2/CIR	2/CIR	2/CIR	2/CIR	2/CIR	2/CIR	2/CIR	2/CIR	2/CIR	2/CIR	2/CIR
SMOOTH PIPE SIZE		15	12	12	12	15	5.1	15	7.4	12	12	12	12	15	15	15	15	18	18	12	12	12
CORRUGATED PIPE SIZE																						
RCP / RCHEP (S)	Class	II	II	II	II	II	HE-A	II	HE-A	III	II	III	III	II	II	II	II	II	II	III	III	II
	D 0.01 Rating	1000	1250	1000	1000	1000	600	1000	600	1500	1250	1500	1500	1250	1250	1250	1250	1000	1000	1500	1500	1000
NON-REINFORCED CONCRETE PIPE, CLASS 3 (S)				YES	YES			YES										YES	YES			YES
CORRUGGATED PE PIPE, TYPE S * (S)				YES																		YES
RIBBED PE PIPE (S)																						
SMOOTH WALL PE PIPE (S)*/ MAXIMUM DR				YES/26.00																		YES/26.00
PROFILE WALL PVC PIPE (S)*				YES																		YES
SMOOTH WALL PVC PIPE (S)*				YES																		YES
VITRIFIED CLAY PIPE, EXTRA STRENGTH (S)			YES	YES	YES			YES			YES							YES	YES			YES
CORRUGATED STEEL PIPE / PIPE ARCH: FULLY BIT. PAVED AND LINED (S)	Corr. Profile	2 2/3 x 1/2				2 2/3 x 1/2		2 2/3 x 1/2						2 2/3 x 1/2	2 2/3 x 1/2	2 2/3 x 1/2	2 2/3 x 1/2	2 2/3 x 1/2	2 2/3 x 1/2			
	Thickness	0.109				0.109		0.109						0.109	0.109	0.109	0.109	0.109	0.109			
ZINC COATED (C)	Corr. Profile																					
	Thickness																					
ZINC COATED WITH BPI (C)	Corr. Profile																					
	Thickness																					
ALUM. COATED TYPE 2 (C)	Corr. Profile																					
	Thickness																					
ALUM. COATED TYPE 2 W/ BPI (C)	Corr. Profile																					
	Thickness																					
POLYMER PRECOATED GALVANIZED (C)	Corr. Profile																	2 2/3 x 1/2	2 2/3 x 1/2			
	Thickness																	0.109	0.109			
FIBER BONDED BITUMINOUS COATED (C)	Corr. Profile																					
	Thickness																					
FIBER BONDED BITUMINOUS COATED W/ BPI (C)	Corr. Profile																					
	Thickness																					
CORRUGATED ALUM ALLOY PIPE (C)	Corr. Profile																					
	Thickness																					
CORRUGATED ALUM ALLOY PIPE W/BPI (C)	Corr. Profile																					
	Thickness																					
STR. PLATE ALUMINUM ALLOY PIPE (C)	Corr. Profile																					
	Thickness																					
STR. PLATE ALUMINUM ALLOY PIPE W/CFP (C)	Corr. Profile																					
	Thickness																					
STR. PLATE STEEL PIPE (C)	Corr. Profile																					
	Thickness																					
STR. PLATE STEEL PIPE W/ CFP (C)	Corr. Profile																					
	Thickness																					

		STRUCTURE NUMBER																				
		72	73	74	75	76	77	78	79	80	81	82	83	84	85	86	87	88				
PIPE TYPE / SHAPE		2/CIR	2/CIR	2/CIR	2/CIR	1/CIR	1/CIR	2/CIR	2/CIR	2/CIR	2/CIR	2/CIR	2/CIR	2/CIR	2/CIR	1/CIR	1/CIR	1/CIR				
SMOOTH PIPE SIZE		36	12	12	12	36	36	12	12	12	12	15	15	15	15	24	24	36				
CORRUGATED PIPE SIZE																						
RCP / RCHEP (S)	Class	II	II	II	II	II	II	II	II	II	II	II	II	II	II	II	II	II				
	D 0.1 Rating	1000	1000	1000	1000	1000	1000	1000	1000	1000	1250	1250	1250	1000	1000	1000	1000	1000				
NON-REINFORCED CONCRETE PIPE, CLASS 3 (S)		YES	YES	YES	YES	YES	YES	YES	YES	YES				YES	YES	YES	YES					
CORRUGGATED PE PIPE, TYPE S * (S)		YES			YES	YES	YES							YES	YES	YES	YES					
RIBBED PE PIPE (S)		YES				YES	YES										YES					
SMOOTH WALL PE PIPE (S)*/ MAXIMUM DR		YES/26.00			YES/26.00	YES/26.00	YES/26.00							YES/26.00	YES/26.00	YES/26.00	YES/26.00					
PROFILE WALL PVC PIPE (S)*		YES			YES	YES	YES							YES	YES	YES	YES					
SMOOTH WALL PVC PIPE (S)*					YES									YES	YES	YES	YES					
VITRIFIED CLAY PIPE, EXTRA STRENGTH (S)		YES	YES	YES	YES	YES	YES	YES	YES	YES	YES			YES	YES	YES	YES					
CORRUGATED STEEL PIPE / PIPE ARCH: FULLY BIT. PAVED AND LINED (S)	Corr. Profile	2 2/3 x 1/2										2 2/3 x 1/2	2 2/3 x 1/2	2 2/3 x 1/2	2 2/3 x 1/2							
	Thickness	0.109										0.109	0.109	0.109	0.109							
ZINC COATED (C)	Corr. Profile																					
	Thickness																					
ZINC COATED WITH BPI (C)	Corr. Profile																					
	Thickness																					
ALUM. COATED TYPE 2 (C)	Corr. Profile																					
	Thickness																					
ALUM. COATED TYPE 2 W/ BPI (C)	Corr. Profile																					
	Thickness																					
POLYMER PRECOATED GALVANIZED (C)	Corr. Profile	2 2/3 x 1/2				2 2/3 x 1/2	2 2/3 x 1/2									2 2/3 x 1/2	2 2/3 x 1/2	2 2/3 x 1/2				
	Thickness	0.109				0.109	0.109									0.109	0.109	0.109				
FIBER BONDED BITUMINOUS COATED (C)	Corr. Profile																					
	Thickness																					
FIBER BONDED BITUMINOUS COATED W/ BPI (C)	Corr. Profile																					
	Thickness																					
CORRUGATED ALUM ALLOY PIPE (C)	Corr. Profile																					
	Thickness																					
CORRUGATED ALUM ALLOY PIPE W/BPI (C)	Corr. Profile																					
	Thickness																					
STR. PLATE ALUMINUM ALLOY PIPE (C)	Corr. Profile																					
	Thickness																					
STR. PLATE ALUMINUM ALLOY PIPE W/CFP (C)	Corr. Profile																					
	Thickness																					
STR. PLATE STEEL PIPE (C)	Corr. Profile																					
	Thickness																					
STR. PLATE STEEL PIPE W/ CFP (C)	Corr. Profile																					
	Thickness																					

LEGEND

RCP-	REINFORCED CONCRETE PIPE
PCHEP-	REINFORCED CONCRETE HORIZONTAL ELLIPTICAL PIPE
PE-	POLYETHYLENE
DR-	DIMENSIONAL RATIO
PVC-	POLYVINYL CHLORIDE
BIT-	BITUMINOUS
CORR-	CORRUGATION
BPI-	BITUMINOUS PAVED INVERT
ALUM-	ALUMINUM
STR-	STRUCTURAL
CFP-	CONCRETE FIELD PAVING
CIR-	CIRCULAR PIPE
DEF-	DEFORMED PIPE
(S)-	SMOOTH PIPE
(C)-	CORRUGATED PIPE MAT'L
OK-	ACCEPTABLE FOR USE
(LS)-	LOCK SEAM PIPE REQ'D
*-	REFER TO STD DRAWING 715-PHCL-18 OR 19 FOR NOMINAL PAY ITEM DIAMETER BOTTOM PLATES SHALL BE OF NEXT GREATER AVAILABLE THICKNESS

Note: All dimensions are in mm.

2/15/2008 14:30

T:\TR\Proj\62947-I-65-SR26\excel\[Pipe Material (E).xls]Pipe Material (2)

JEFFREY E. LAZZELL REGISTERED No. 860163 STATE OF INDIANA PROFESSIONAL ENGINEER

RECOMMENDED FOR APPROVAL [signature] 1-9-08
DESIGN ENGINEER DATE

DESIGNED: MAB DRAWN: DMS
CHECKED: JEL CHECKED: MHF

INDIANA DEPARTMENT OF TRANSPORTATION

PIPE MATERIAL SHEET

DESIGNATION	9802780
SURVEY BOOK	
SHEETS	76 of 136
CONTRACT	IR-29162
PROJECT	IM-65-6 (063)

EROSION CONTROL TABLE OF QUANTITIES

LOCATIONS		DITCH INLET PROTECTION	TEMPORARY CHECK DAM, REVEMENT RIPRAP	TEMPORARY CHECK DAM, STRAW BALES	TEMPORARY SEDIMENT TRAP	TEMPORARY SEDIMENT BASIN	FISH POOL AND SEDIMENT TRAP, COMBINATION	TEMPORARY SILT FENCE	TEMPORARY SLOPE DRAIN	SPLASHPAD, RIPRAP	TEMPORARY MULCHING	TEMPORARY CURB INLET PROTECTION	TEMPORARY CHECK DAM, GEOTEXTILE		
STATION TO STATION	LT/RT														
		EACH	TONS	FEET	TONS	EACH	EACH	FEET	FEET	TONS	TONS	EACH	SY		
SR 26															
LINE "G"															
96+75 to 99+33	Rt.							376							
114+92 to 116+57	Lt.							167							
115+38 to 117+53	Rt.							217							
SR 26															
LINE "G"															
95+88	Rt.											1			
95+89	Lt.											1			
97+00	Lt.											1			
97+00	Rt.											1			
98+00	Lt.											1			
98+00	Rt.											1			
100+00	Lt.											1			
100+00	Rt.											1			
101+00	Lt.											1			
101+00	Rt.											1			
102+50	Lt.											1			
103+00	Rt.											1			
103+50	Lt.											1			
104+85	Lt.											1			
105+00	Rt.											1			
106+20	Rt.											1			
106+80	Lt.											1			
107+90	Rt.											1			
108+00	Lt.											1			
108+90	Rt.											1			
109+50	Lt.											1			
110+50	Rt.											1			
111+00	Lt.											1			
112+00	Lt.											1			
112+00	Rt.											1			
113+30	Lt.											1			
113+50	Rt.											1			
116+50	Lt.											1			
116+50	Rt.											1			
118+00	Lt.											1			
118+00	Rt.											1			
119+00	Lt.											1			
119+00	Rt.											1			
												1			
SR 26												1			
LINE "A"												1			
												1			
120+10	Lt.											1			
120+10	Rt.											1			
121+10	Lt.											1			
121+10	Rt.											1			
122+00	Lt.											1			
122+00	Rt.											1			
123+75	Lt.											1			
124+00	Lt.											1			
124+00	Rt.											2			
126+75	Lt.											1			
127+00	Lt.											1			
127+00	Rt.											2			
128+25	Lt.											1			
SUBTOTAL			**0**		**0**		**0**	**760**				**52**	**0**		

LOCATIONS		DITCH INLET PROTECTION	TEMPORARY CHECK DAM, REVEMENT RIPRAP	TEMPORARY CHECK DAM, STRAW BALES	TEMPORARY SEDIMENT TRAP	TEMPORARY SEDIMENT BASIN	FISH POOL AND SEDIMENT TRAP, COMBINATION	TEMPORARY SILT FENCE	TEMPORARY SLOPE DRAIN	SPLASHPAD, RIPRAP	TEMPORARY MULCHING	TEMPORARY CURB INLET PROTECTION	TEMPORARY CHECK DAM, GEOTEXTILE		
STATION TO STATION	LT/RT														
		EACH	TONS	FEET	TONS	EACH	EACH	FEET	FEET	TONS	TONS	EACH	SY		
SR 26															
LINE "A"															
128+25	Rt.											1			
129+50	Lt.											1			
129+50	Rt.											1			
SR 26															
LINE "G"															
101+00	Lt.	1													
SR 26															
LINE "G"															
97+00	Rt.		0.36										25		
98+00	Lt.		0.36										26		
99+30	Lt.		0.23										17		
100+50	Lt.		0.3										21		
106+00	Rt.		0.3										21		
124+00	Rt.		0.56										40		
124+50	Lt.		0.28										20		
126+50	Rt.		0.56										40		
128+00	Rt.		0.58										42		
129+50	Rt.		0.3										21		
129+67	Lt.		0.3										21		
RAMP "NER"															
01+00	Lt.		0.59										42		
01+00	Rt.		0.63										45		
03+00	Rt.		0.41										29		
06+00	Lt.		0.41										29		
06+00	Rt.		0.41										29		
LINE "A-I-65"															
516+00	Lt.		0.36										25		
561+00	Lt.		0.41										28		
RAMP "NWR"															
12+50	Rt.		0.41										28		
13+50	Rt.		0.41										28		
14+00	Rt.		0.41										28		
15+00	Rt.		0.41										28		
15+50	Lt.		0.27										19		
15+50	Rt.		0.41										28		
16+50	Rt.		0.3										21		
RAMP "SWR"															
03+50	Rt.		0.3										21		
04+50	Lt.		0.46										33		
05+00	Lt.		0.3										21		
RAMP "SER"															
13+50	Rt.		0.67										49		
14+00	Lt.		0.47										34		
14+50	Lt.		0.52										37		
15+00	Lt.		0.41										29		
15+00	Rt.		0.3										21		
15+50	Rt.		0.3										21		
16+00	Lt.		0.41										29		
17+00	Lt.		0.41										29		
17+00	Rt.		0.3										21		
18+00	Lt.		0.3										21		
SUBTOTAL		**1**	**15.12**					**0**				**3**	**1067**		
TOTAL		**1**	**15.1**					**760**				**55**	**1067**		

NOTE: FOR PLACEMENT OF EROSION CONTROL FEATURES, SEE PLAN & PROFILE SHEETS AND INTERCHANGE DRAINAGE SHEETS.

JEFFREY E. LAZELL REGISTERED No. 860163 STATE OF INDIANA PROFESSIONAL ENGINEER

RECOMMENDED FOR APPROVAL _____ 1-9-08
DESIGN ENGINEER DATE

DESIGNED: MHF DRAWN: MHF
CHECKED: MAB CHECKED: MAB

INDIANA
DEPARTMENT OF TRANSPORTATION

EROSION CONTROL TABLE

	DESIGNATION
	9802780
SURVEY BOOK	SHEETS
17135	77 of 136
CONTRACT	PROJECT
IR-29162	IM-65-6 (063)