PROJECT	DESIGNATION
IM-80-1(163)	9709110
CONTRACT	BRIDGE FILE
B-26411	I-80-8-8467

INDEX

STRUCTURE	TYPE	SPAN AND SKEW	OVER	STATION
I80-8-8467	TWO SPAN CONTINUOUS COMPOSITE	2 SPANS 110'-9, 110'-9 SKEW: RADIAL	I-80/94	26+53.93 "C"

SHEET NO.	SUBJECT
1	TITLE SHEET
2	TYPICAL SECTION
3	DETOUR ROUTE
4	TRAFFIC MAINTENAMCE DETAILS
5-6	PLAN & PROFILE
7-9	CONSTRUCTION DETAILS
10-12	EROSION CONTROL
12A-12C	SOIL BORINGS
13	LAYOUT
14	GENERAL PLAN
15	BENT NO. 1 DETAILS
15A	BENT NO. 3 DETAILS
16	BENT NO. 1 & 3 DETAILS AND BILL OF MATERIALS
17	BENT NO. 2 DETAILS
18	BENT NO. 2 DETAILS AND BILL OF MATERIALS
19	FRAMING PLAN
20-21	PRESTRESSED CONCRETE T BEAM DETAILS
22	SLAB PLAN
23-26	SLAB DETAILS
27	BRIDGE APPROACH DETAILS
27A	CONCRETE BRIDGE RAILING TRANSITION DETAILS
28-29	MSE WALL DETAILS
30	SCREED PLAN
31	NOT USED
32	ROAD SUMMARY
~~32A~~	~~UNDERDRAIN TABLE~~
33	PIPE MATERIAL SELECTION
34	BRIDGE SUMMARY
35-57	CROSS SECTION

B-26411
PART 1 of 2

INDIANA DEPARTMENT OF TRANSPORTATION

BRIDGE PLANS

PROJECT No. ST/80-1 (163) P.E.

PROJECT No. IM-80-1 (163) CONST.

RP 007+088

REPLACEMENT OF CHASE ST. BRIDGE OVER I-80/94

TRAFFIC DATA	CHASE STREET
A.A.D.T. (2002)	9,104 V.P.D.
A.A.D.T. (2022)	13,529 V.P.D.
D.H.V.	
DIRECTIONAL DISTRIBUTION	50 %
TRUCKS	5% A.A.D.T.
DESIGN DATA	
DESIGN SPEED	30 mph
ESAL	500,000
PROJECT DESIGN CRITERIA	4R (NON-FREEWAY)
FUNCTIONAL CLASSIFICATION	LOCAL AGENCY (COLLECTOR)
RURAL/URBAN	URBAN (SUBURBAN)
TERRAIN	LEVEL
ACCESS CONTROL	NONE

R-9-W R-8-W

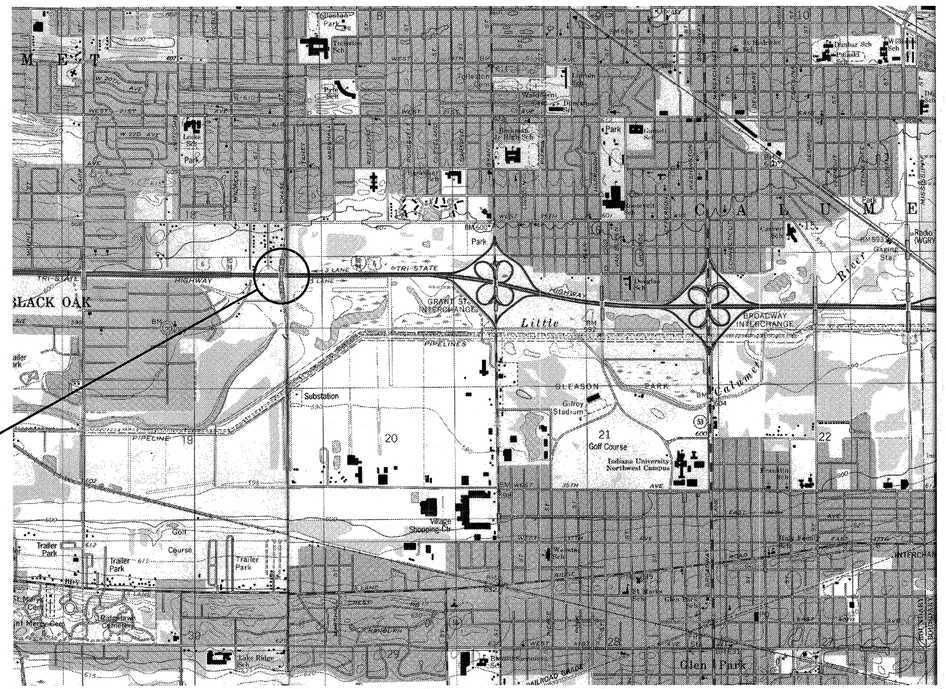

R-9-W R-8-W

BRIDGE FILE: I-80-8-8467
BRIDGE REPLACEMENT
DES. NO. 9709110
CHASE ST. OVER I-80/94

Scale: 1:24000

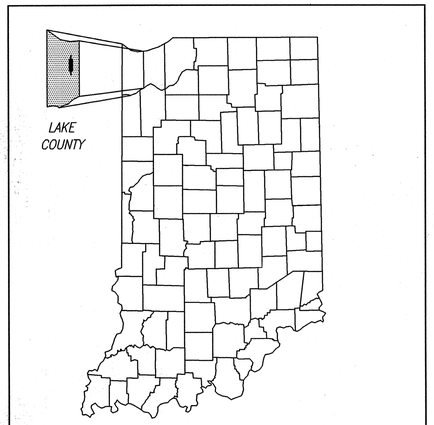

PROJECT LOCATION SHOWN BY

LAKE COUNTY

[INDIANA DEPARTMENT OF TRANSPORTATION STANDARD SPECIFICATIONS DATED 1999 TO BE USED WITH THESE PLANS]

REVISIONS	
DATE	SHEETS REVISED
3-31-03	TITLE SHEET, 2, 4, 5, 6, 7, 8, 9, 28, 29 & 34
4-3-03	TITLE SHEET, 5 THRU 15
4-11-03	TITLE SHEET, 6, 7, 10, 13 & 32
7-3-03	TITLE SHEET, 1, 2, 7, 8, 9 & 35 THRU 57
11/07/03	AS BUILT

RQAW
CONSULTING ENGINEERS & ARCHITECTS
RQAW Corporation
4755 Kingsway Drive, Suite 400
Indianapolis, Indiana 46205-1547
(317) 255-6060 FAX (317) 255-8354

FEDERAL HIGHWAY ADMINISTRATION
U.S. DEPT. OF TRANSPORTATION
APPROVED: _____
DATE
DIVISION ADMINISTRATOR

PLANS PREPARED BY: RQAW CORPORATION (317) 255-6060
PHONE NUMBER
Richard T. O'Connor 11-01-2002
DATE
APPROVED FOR LETTING: _____
CHIEF, DIVISION OF DESIGN DATE

RICHARD T. O'CONNOR REGISTERED No. 17778 STATE OF INDIANA PROFESSIONAL ENGINEER

BRIDGE FILE	
I-80-8-8467	
DESIGNATION	
9709110	
SHEETS	
1 of 57	
CONTRACT	PROJECT
B-26411	IM-80-1(163)

Time: 14:37:8
Date: 11/7/2003
Scale: 1=1(PS)
Drawing File: 60302D-1\CHASE\title-REV.dwg,DWG (ddunca)

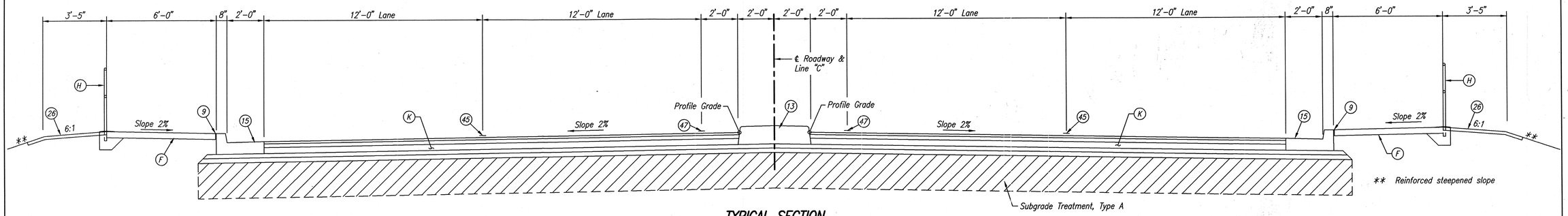

TYPICAL SECTION
STA. 13+60.15 "C" TO STA. 25+20.46 "C"
STA. 27+87.03 "C" TO STA. 39+15 "C"

Scale: 3/8" = 1'-0

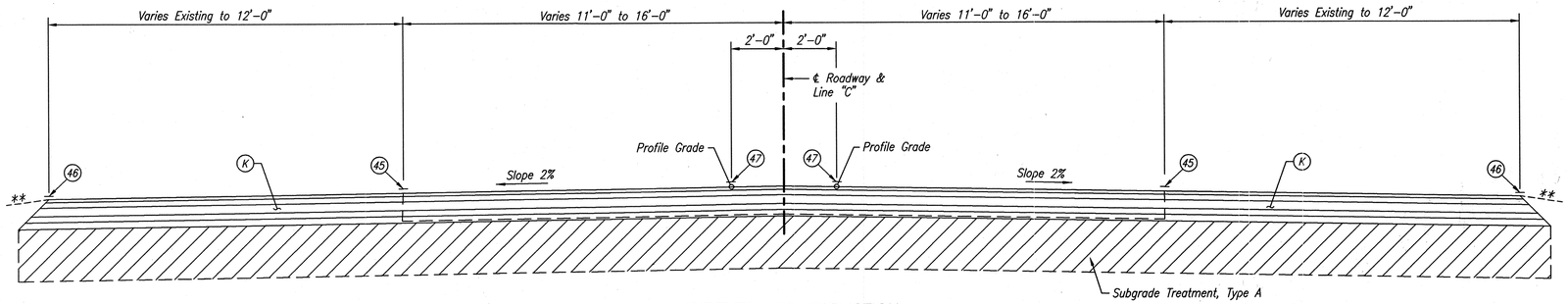

INCIDENTAL CONSTRUCTION
STA. 13+05.85 "C" TO STA. 13+60.15 "C"

Scale: 3/8" = 1'-0

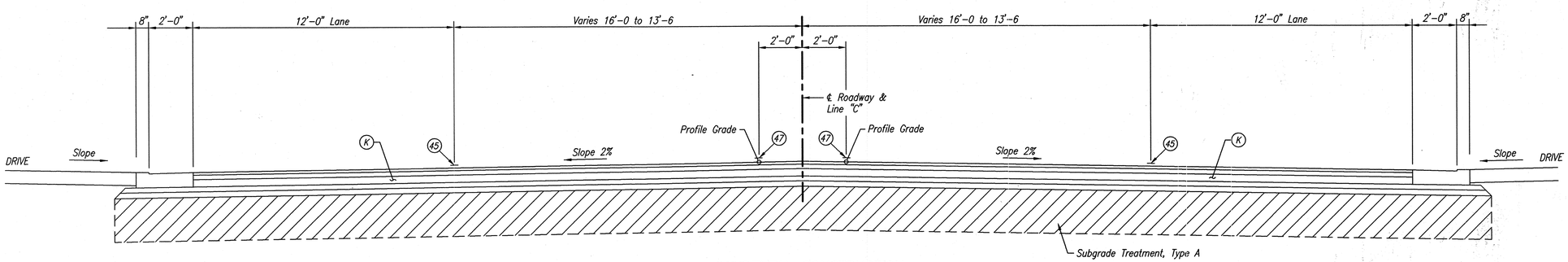

INCIDENTAL CONSTRUCTION
STA. 39+15 "C" TO STA. 39+65 "C"

Scale: 3/8" = 1'-0

LEGEND

- (F) 4" Sidewalk, Concrete
- (K) QC/QA-HMA Pavement
  - 165#/yd² QC/QA-HMA, 2, 76, Surface, 9.5 mm
  - 275#/yd² QC/QA-HMA, 2, 76, Intermediate, 19.0 mm
  - 1100#/yd² ~~440#/yd²~~ QC/QA-HMA, 2, 64, Base, 19.0 mm
  - ~~302.5#/yd² QC/QA-HMA, 5, 76, Intermediate, C19.0 mm~~
  - ~~330#/yd² QC/QA-HMA, 2, 64, Base, 19.0 mm~~
- (9) 12mm Preformed Joint Filler
- (13) Center Curb, Concrete, Type "C"
- (15) Curb and Gutter, Concrete, Type "C"
- ~~(19) Underdrains~~
- (26) Sodding, Nursery
- (45) Line, Epoxy, Broken, White, 4"
- (46) Line, Epoxy, Solid, White, 4"
- (47) Line, Epoxy, Solid, Yellow, 4"
- (H) Pedestrian Handrail for Limits of Reinforced Steepened Slopes

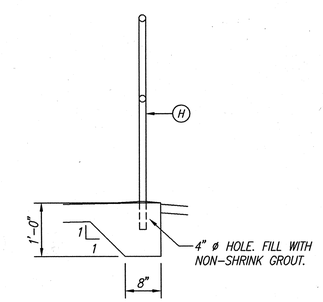

ENLARGED HANDRAIL DETAIL

Scale: 3/4" = 1'-0

REVISIONS		REVISIONS	
DATE	REVISION	DATE	REVISION
3-31-03	TYPICAL SECTION STATIONINGS AND LEGEND	7/07/03	AS BUILT
6-23-03	REVISED PEDESTRIAN HANDRAIL IN TYP. SECTION		
	AND ADDED ENLARGED HANDRAIL DETAIL		
7-2-03	ELIMINATED UNDERDRAINS AND REVISED		
	PAVEMENT IN LEGEND		

RICHARD T. O'CONNOR REGISTERED No. 17778 STATE OF INDIANA PROFESSIONAL ENGINEER

RECOMMENDED FOR APPROVAL Richard T. O'Connor
DESIGN ENGINEER DATE

DESIGNED: scj DRAWN: scj
CHECKED: doc CHECKED: doc

INDIANA DEPARTMENT OF TRANSPORTATION

TYPICAL CROSS SECTION
CHASE STREET OVER I-80/I-94

HORIZONTAL SCALE	BRIDGE FILE
AS NOTED	I-80-8-5467
VERTICAL SCALE	DESIGNATION
	9709110
SURVEY BOOK	SHEET
	2 of 57
CONTRACT	PROJECT
B-26411	IM-80-1(163)

Time: 9:59:8
Date: 11/3/2002
Code: F-2
Drawing File: 6030020-1\DHASE\typical.dwg DWG (dduncan)

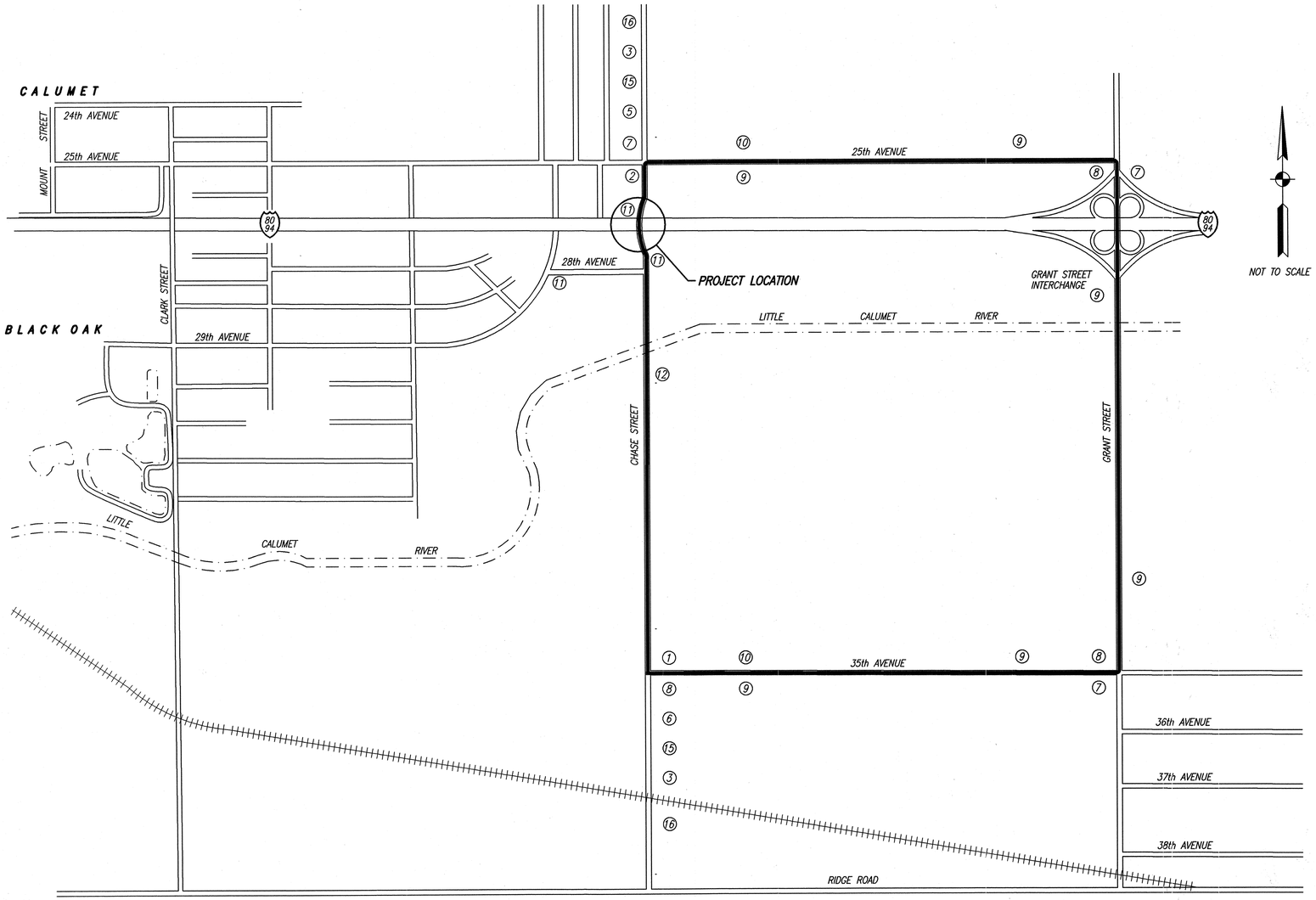

LAKE COUNTY

LEGEND

DETOUR ROUTE

NOTE: ALTERNATE DETOUR ROUTES MUST BE APPROVED BY THE INDIANA DEPARTMENT OF TRANSPORTATION AND THE CITY OF GARY.

SIGN LENGEND				
SYMBOL	MESSAGE	NUMBER	RTYPE	REQ'D
1	ROAD CLOSED	R11-3	A	*
	DETOUR	XM4-10(R)	B	
2	ROAD CLOSED	R11-2	A	*
	DETOUR	XM4-10(L)	B	
3	ROAD CLOSED AHEAD	XW20-3	A	2
5	DETOUR ROUTE MARKER ASSEMBLY (ADVANCE LEFT)			1
6	DETOUR ROUTE MARKER ASSEMBLY (ADVANCE RIGHT)			1
7	DETOUR ROUTE MARKER ASSEMBLY (LEFT)			3
8	DETOUR ROUTE MARKER ASSEMBLY (RIGHT)			3
9	DETOUR ROUTE MARKER ASSEMBLY (STRAIGHT)			6
10	DETOUR ROUTE MARKER ASSEMBLY (END DETOUR)			2
11	STANDARD BARRICADE (TYPE III-B) ⊛			6
	ROAD CLOSURE SIGN ASSEMBLY (R11-2)			3
12	STANDARD BARRICADE (TYPE III-B) ⊛			2
	ROAD CLOSURE SIGN ASSEMBLY (R11-3)			1
15	DETOUR AHEAD XW20-2		A	2
16	ROUTE CLOSURE NOTICE	XG20-5	A	2

* INDICATES SIGN TO BE INCLUDED WITH ROAD CLOSURE SIGN ASSEMBLY
⊛ 4 BARRICADES REQUIRED PER LOCATION

REVISIONS	
DATE	REVISION
11/07/03	AS BUILT

REGISTERED RICHARD T. O'CONNOR No. 17778 STATE OF INDIANA PROFESSIONAL ENGINEER

RECOMMENDED FOR APPROVAL — DESIGN ENGINEER — DATE

DESIGNED: SCJ
DRAWN: DRD
CHECKED:
CHECKED: SCJ

INDIANA DEPARTMENT OF TRANSPORTATION

DETOUR ROUTE
CHASE STREET OVER I-80/I-94

HORIZONTAL SCALE	BRIDGE FILE
AS NOTED	I-80-8-5467
VERTICAL SCALE	DESIGNATION
	9709110
SURVEY BOOK	SHEET
	3 of 57
CONTRACT	PROJECT
B-26411	IM-80-1(163)

Time: 10:56:44
Date: 11/7/2003
Scale: 1=1(PS)
Drawing File: 603020-1\CHASE\detroute.dwg DWG (cryan)

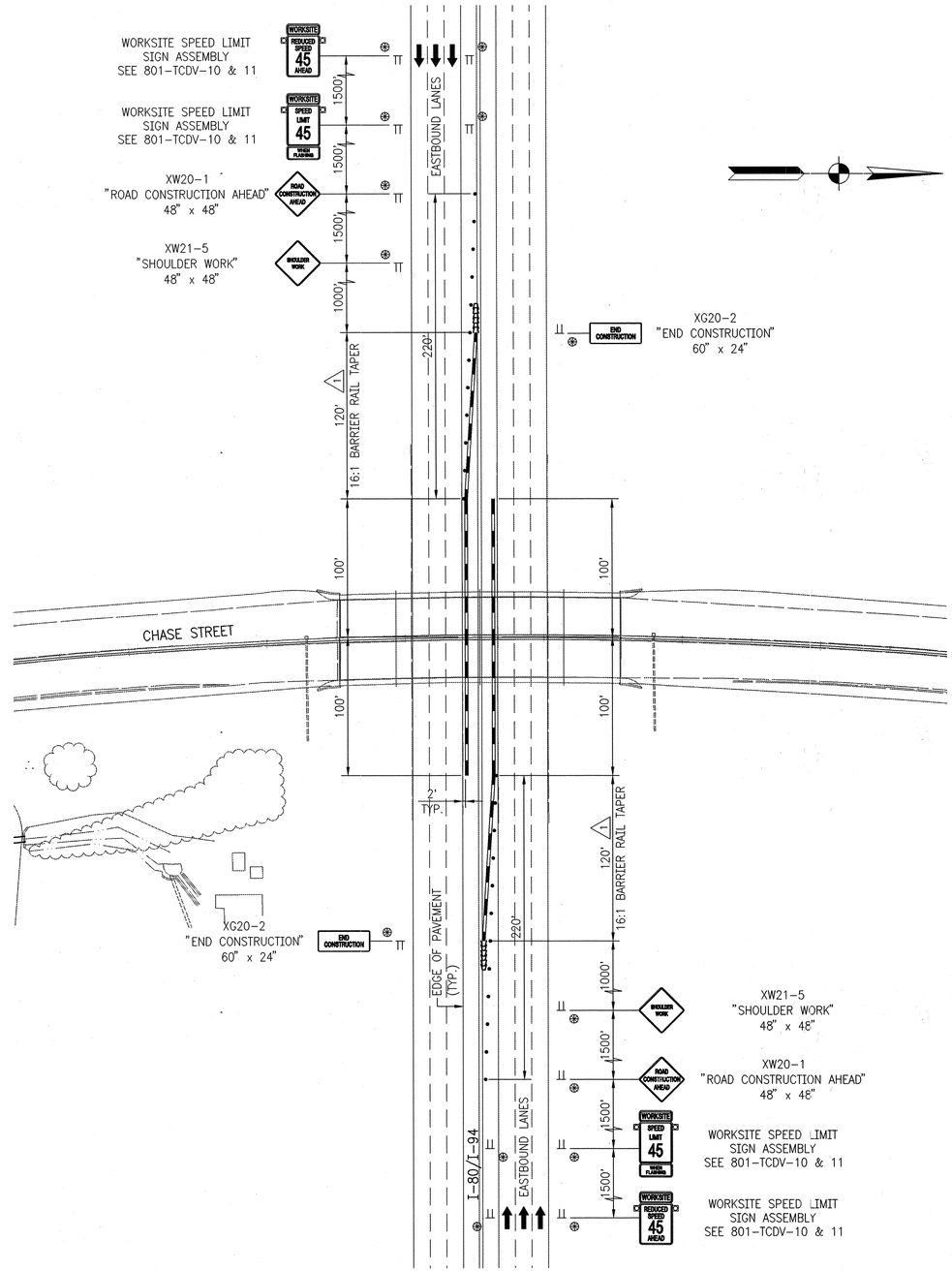

LEGEND

- INDICATES TEMPORARY CONCRETE BARRIER RAIL.
- INDICATES DIRECTION OF TRAFFIC.
- INDICATES LOW INTENSITY FLASHING YELLOW LIGHT, TYPE A.
- INDICATES STANDARD DRUM OR BARRICADE WITH TYPE "C" STEADY BURNING LIGHT.
- INDICATES LIMITS OF "ANCHORED" TEMPORARY CONCRETE BARRIER. SEE STANDARD DRAWING 602-TCCB-04.

REVISIONS	
DATE	REVISION
3-26-03	ROTATED NORTH ARROW
11/07/03	AS BUILT

RICHARD T. O'CONNOR REGISTERED No. 17778 STATE OF INDIANA PROFESSIONAL ENGINEER

RECOMMENDED FOR APPROVAL — DESIGN ENGINEER — DATE

DESIGNED: SCJ — DRAWN: DRD

CHECKED: — CHECKED: SCJ

INDIANA DEPARTMENT OF TRANSPORTATION

TRAFFIC MAINTENANCE DETAILS
CHASE STREET OVER I-80/I-94

HORIZONTAL SCALE	BRIDGE FILE
1" = 50'	I-80-8-5467
VERTICAL SCALE	DESIGNATION
1" = 50'	9709110
SURVEY BOOK	SHEET
	4 of 57
CONTRACT	PROJECT
B-26411	IM-80-1(163)

Time: 9:17:36
Date: 11/7/2003
Scale: 1"=50(PS)
Drawing File: 6C0020-1\CHASE\TM-UNDER.dwg.DWG (mfrancis)

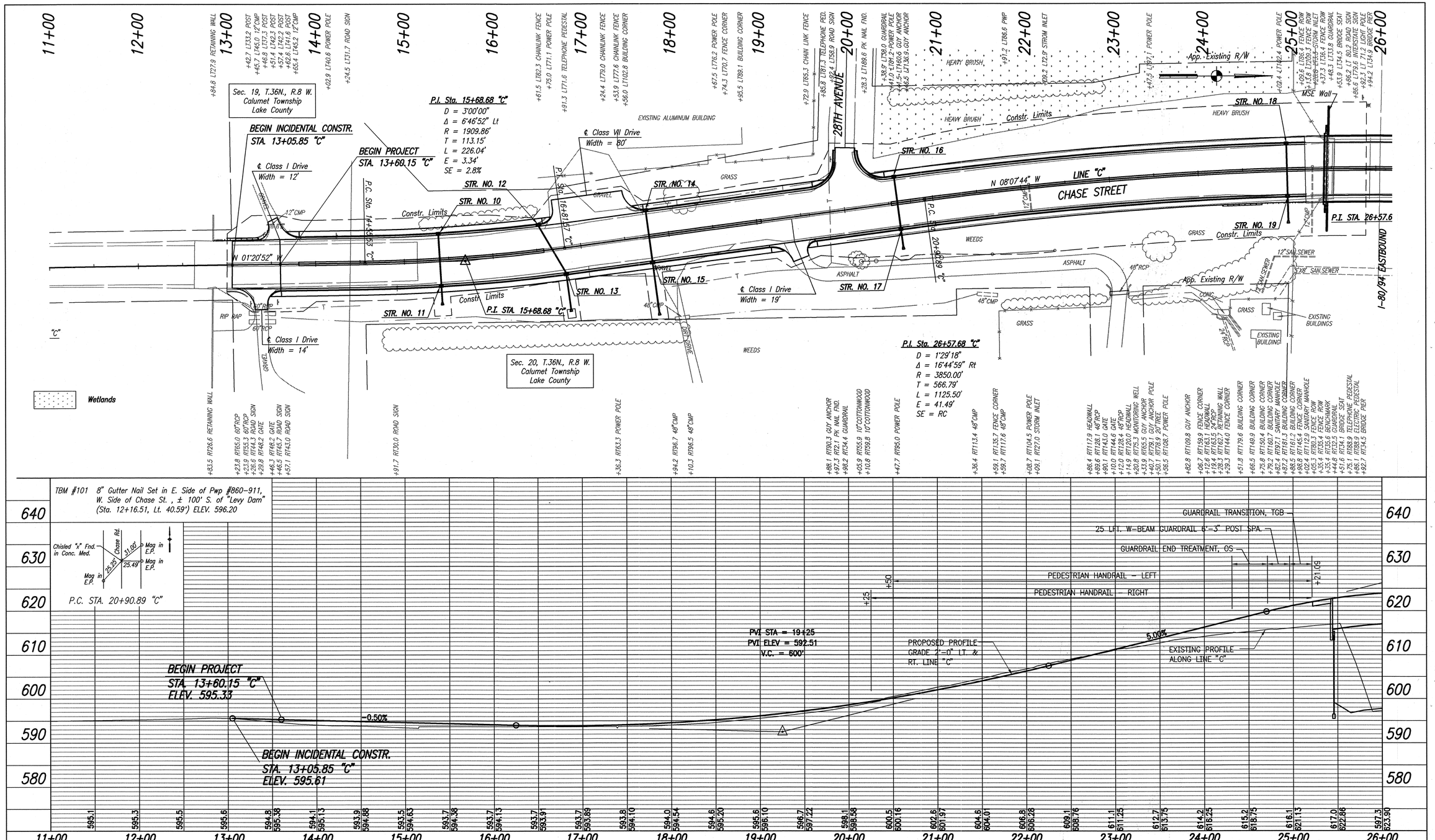

REVISIONS

DATE	REVISION
3-26-03	UPDATED CONSTRUCTION LIMITS
4-3-03	REVISED CURVE DATA
11/07/03	AS BUILT

RICHARD T. O'CONNOR
REGISTERED
No. 17778
STATE OF INDIANA
PROFESSIONAL ENGINEER

RECOMMENDED FOR APPROVAL Richard T. O'Connor
DESIGN ENGINEER DATE

DESIGNED: SCJ DRAWN: SCJ
CHECKED: DOC CHECKED: DOC

INDIANA
DEPARTMENT OF TRANSPORTATION

PLAN AND PROFILE
CHASE STREET OVER I-80/I-94

HORIZONTAL SCALE	BRIDGE FILE
1"=50'	I-80-8-5467
VERTICAL SCALE	DESIGNATION
1"=10'	9709110
SURVEY BOOK	SHEET
	5 of 57
CONTRACT	PROJECT
B-26411	IM-80-1(163)

Time: 14:47:9
Date: 1/21/2003
Scale: 1=50(PS)
Drawing File: 603020-1\CHASE\pp1.dwg DWG (ddunson)

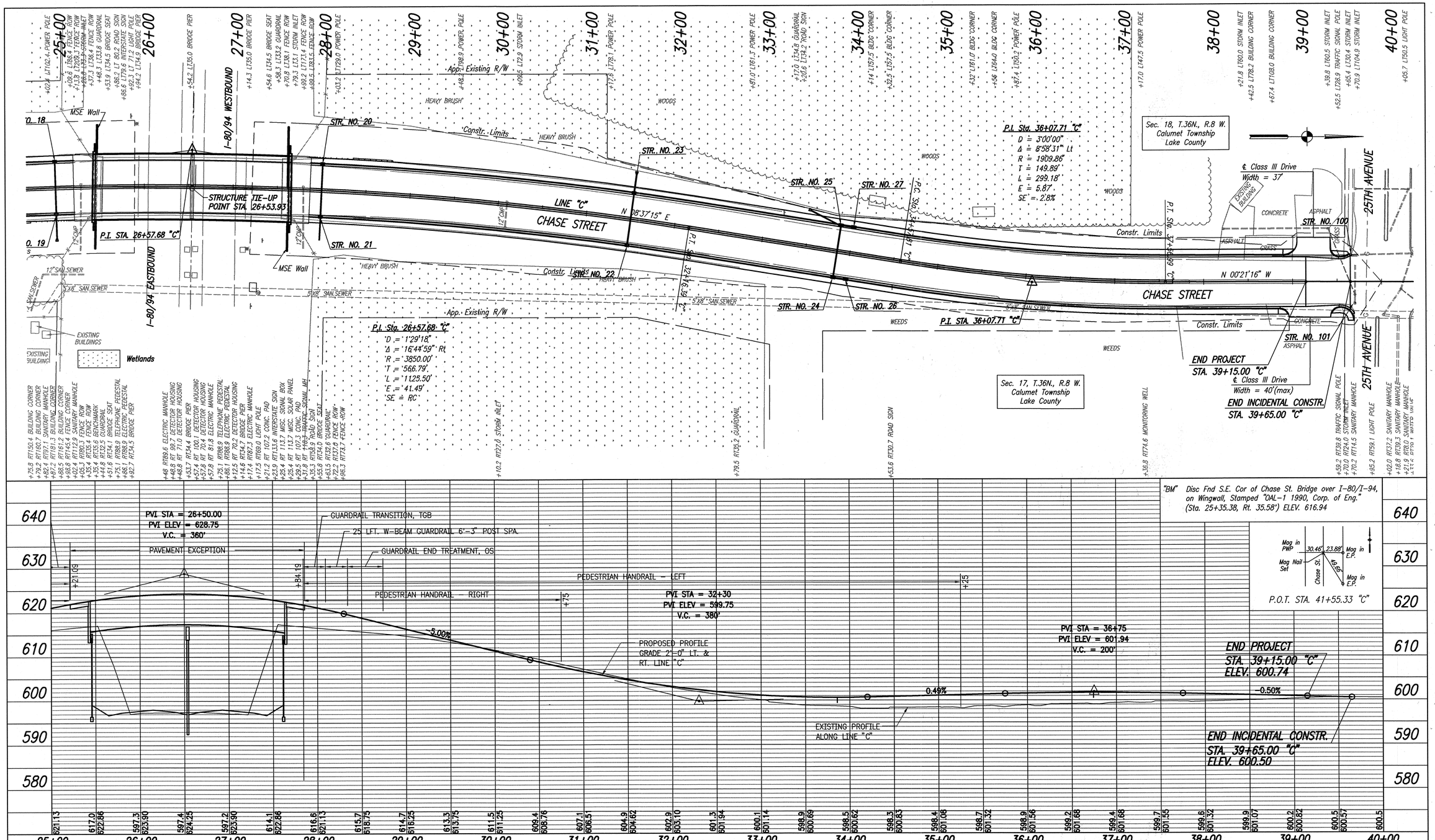

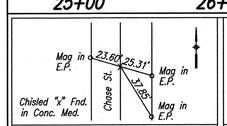

P.T. STA. 32+16.39 "C"

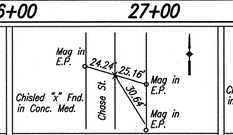

P.C. STA. 34+57.81 "C"

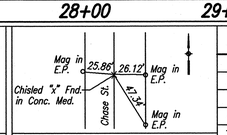

P.T. STA. 37+56.99 "C"

REVISIONS	
DATE	REVISION
3-26-03	UPDATED CONSTRUCTION LIMITS
4-2-03	REVISED CURVE DATA
4-10-03	REVISED PVI STATION
11/07/03	AS BUILT

RICHARD T. O'CONNOR REGISTERED No. 17778 STATE OF INDIANA PROFESSIONAL ENGINEER

RECOMMENDED FOR APPROVAL Richard T. O'Connor
DESIGN ENGINEER DATE

DESIGNED: SCJ DRAWN: SCJ
CHECKED: DOC CHECKED: DOC

INDIANA DEPARTMENT OF TRANSPORTATION

PLAN AND PROFILE
CHASE STREET OVER I-80/I-94

HORIZONTAL SCALE	BRIDGE FILE
1"=50'	I-80-8-5467
VERTICAL SCALE	DESIGNATION
1"=10'	9709110
SURVEY BOOK	SHEET 6 of 57
CONTRACT	PROJECT
B-26411	IM-80-1(163)

Time: 14:47:9
Date: 1/21/2003
Scale: 1"=50(PS)
Drawing File: 603020-1\CHASE\pp1.dwg DWG (dduncan)

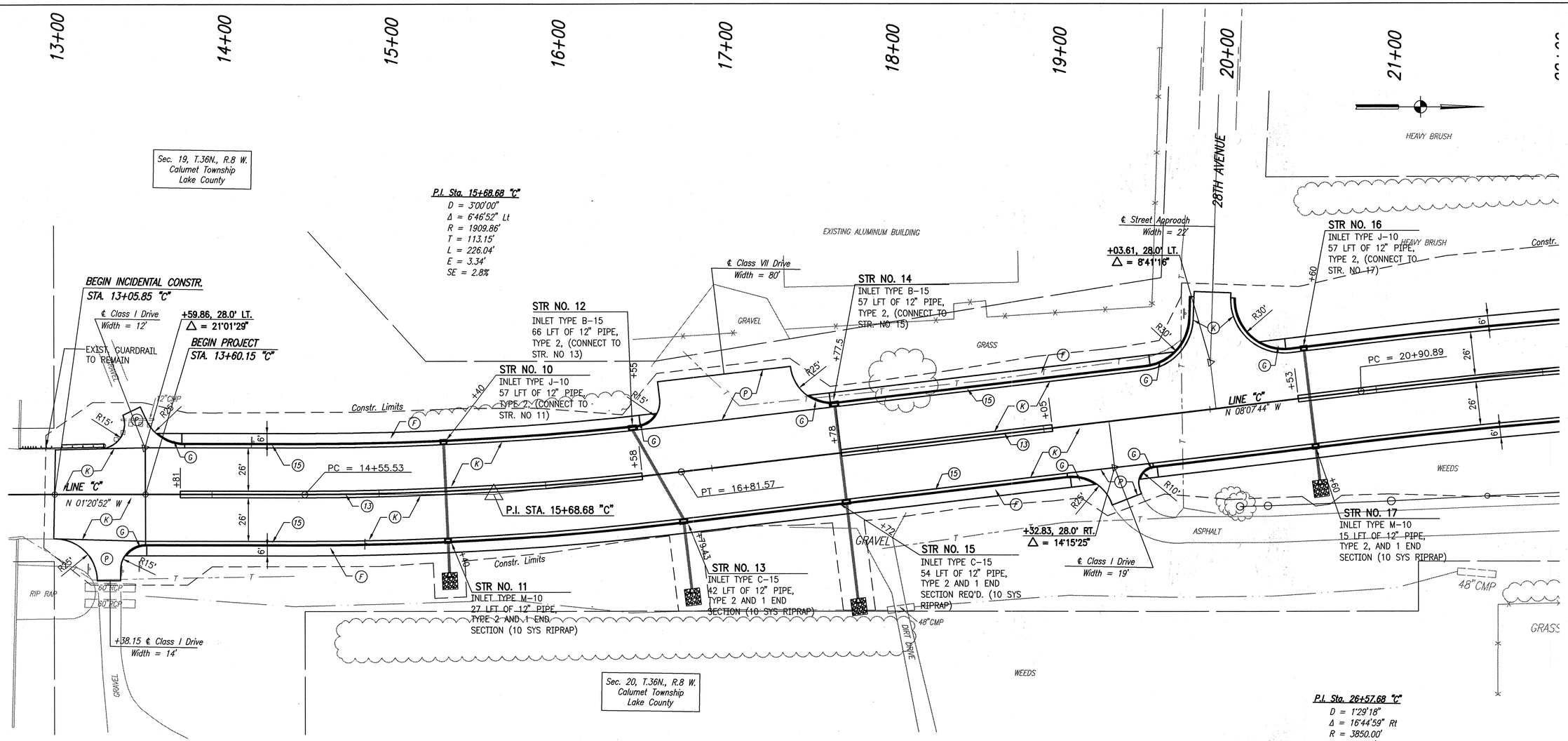

P.I. Sta. 26+57.68 "C"
D = 1°29'18"
Δ = 16°44'59" Rt
R = 3850.00'
T = 566.79'
L = 1125.50
E = 41.49'
SE = RC

NOTE: GEOGRID SHALL BE PLACED 24" BELOW PROPOSED SUBGRADE FROM STA. 17+00 TO 18+00 FOR LIMITS OF SUBGRADE TREATMENT.

LEGEND

(F) 4" Sidewalk, Concrete

(G) Curb Ramp, Type "G"

(K) QC/QA-HMA Pavement
165#/yd² QC/QA-HMA, 2, 76, Surface, 9.5 mm
275#/yd² QC/QA-HMA, 2, 76, Intermediate, 19.0 mm
1100#/yd² ~~440#/yd²~~ QC/QA-HMA, 2, 64, Base, 19.0 mm
~~302.5#/yd² QC/QA-HMA, 5, 76, Intermediate, C19.0 mm~~
~~330#/yd² QC/QA-HMA, 2, 64, Base, 19.0 mm~~

(13) Center Curb, Concrete, Type "C"

(15) Curb and Gutter, Concrete, Type "C"

(P) 6" PCCP For Drives

REVISIONS	
DATE	REVISION
3-26-03	UPDATED CONSTRUCTION LIMITS.
4-3-03	REVISED CURVE DATA
4-11-03	REVISED DRIVE RADIUS AND STR.'S 12 & 14
7-03-03	REVISED PAVEMENT SECTION IN LEGEND
11/7/03	AS BUILT

RICHARD T. O'CONNOR REGISTERED No. 17778 STATE OF INDIANA PROFESSIONAL ENGINEER

RECOMMENDED FOR APPROVAL Richard T. O'Connor
DESIGN ENGINEER DATE

DESIGNED: SCJ DRAWN: SCJ
CHECKED: DOC CHECKED: DOC

INDIANA DEPARTMENT OF TRANSPORTATION

CONSTRUCTION DETAILS
CHASE STREET OVER I-80/I-94

HORIZONTAL SCALE	BRIDGE FILE
1" = 30'	I-80-8-5467
VERTICAL SCALE	DESIGNATION
	9709110
SURVEY BOOK	SHEET
	7 of 57
CONTRACT	PROJECT
B-26411	IM-80-1(163)

Time: 14:33:55
Date: 11/21/2003
Scale: 1=30(PS)
Drawing File: 603020-1\CHASE\C01.dwg,DWG (dauncan)

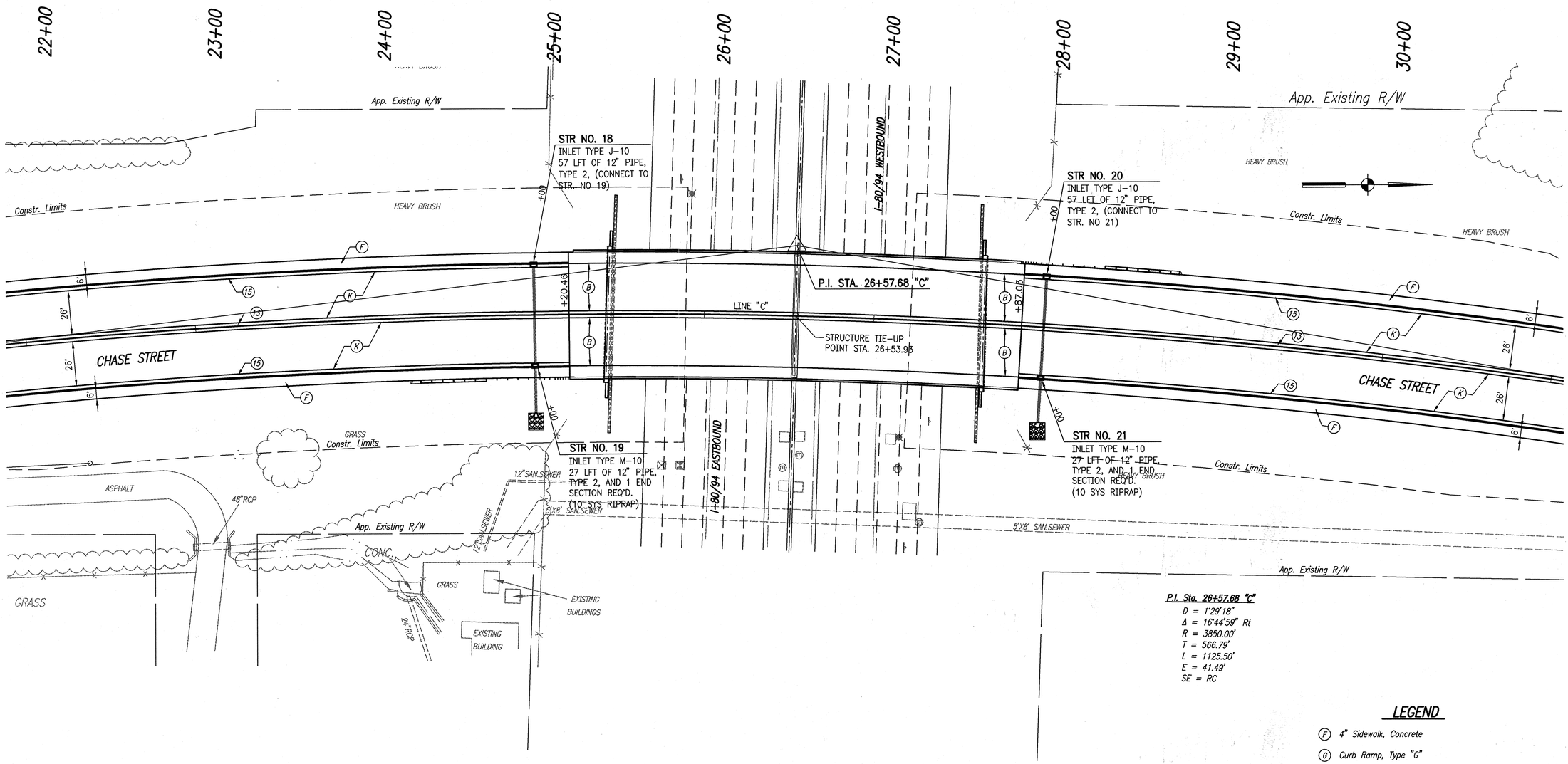

P.I. Sta. 26+57.68 "C"

D = 1°29'18"
Δ = 16°44'59" Rt
R = 3850.00'
T = 566.79'
L = 1125.50'
E = 41.49'
SE = RC

LEGEND

(F) 4" Sidewalk, Concrete

(G) Curb Ramp, Type "G"

(K) QC/QA-HMA Pavement
165#/yd² QC/QA-HMA, 2, 76, Surface, 9.5 mm
275#/yd² QC/QA-HMA, 2, 76, Intermediate, 19.0 mm
1100#/yd² ~~440#/yd²~~ QC/QA-HMA, 2, 64, Base, 19.0 mm
~~302.5#/yd² QC/QA-HMA, 5, 76, Intermediate, C19.0 mm~~
~~330#/yd² QC/QA-HMA, 2, 64, Base, 19.0 mm~~

(13) Center Curb, Concrete, Type "C"

(15) Curb and Gutter, Concrete, Type "C"

(P) 6" PCCP For Drives

(B) 12" Reinforced Concrete Bridge Approach

REVISIONS	
DATE	REVISION
3-26-03	UPDATED CONSTRUCTION LIMITS.
4-3-03	REVISED CURVE DATA
7-03-03	REVISED PAVEMENT SECTION IN LEGEND
11/7/03	AS BUILT

RICHARD T. O'CONNOR REGISTERED No. 17778 STATE OF INDIANA PROFESSIONAL ENGINEER

RECOMMENDED FOR APPROVAL Richard T. O'Connor
DESIGN ENGINEER DATE

DESIGNED: SCJ DRAWN: SCJ
CHECKED: DOC CHECKED: DOC

INDIANA DEPARTMENT OF TRANSPORTATION

CONSTRUCTION DETAILS
CHASE STREET OVER I-80/I-94

HORIZONTAL SCALE	BRIDGE FILE
1" = 30'	I-80-8-5467
VERTICAL SCALE	DESIGNATION
	9709110
SURVEY BOOK	SHEET
	8 of 57
CONTRACT	PROJECT
B-26411	IM-80-1(163)

Time: 14:33:55
Date: 1/21/2003
Scale: 1=30(PS)
Drawing File: 603020-1\CHASE\CD1.dwg DWG (dduncan)

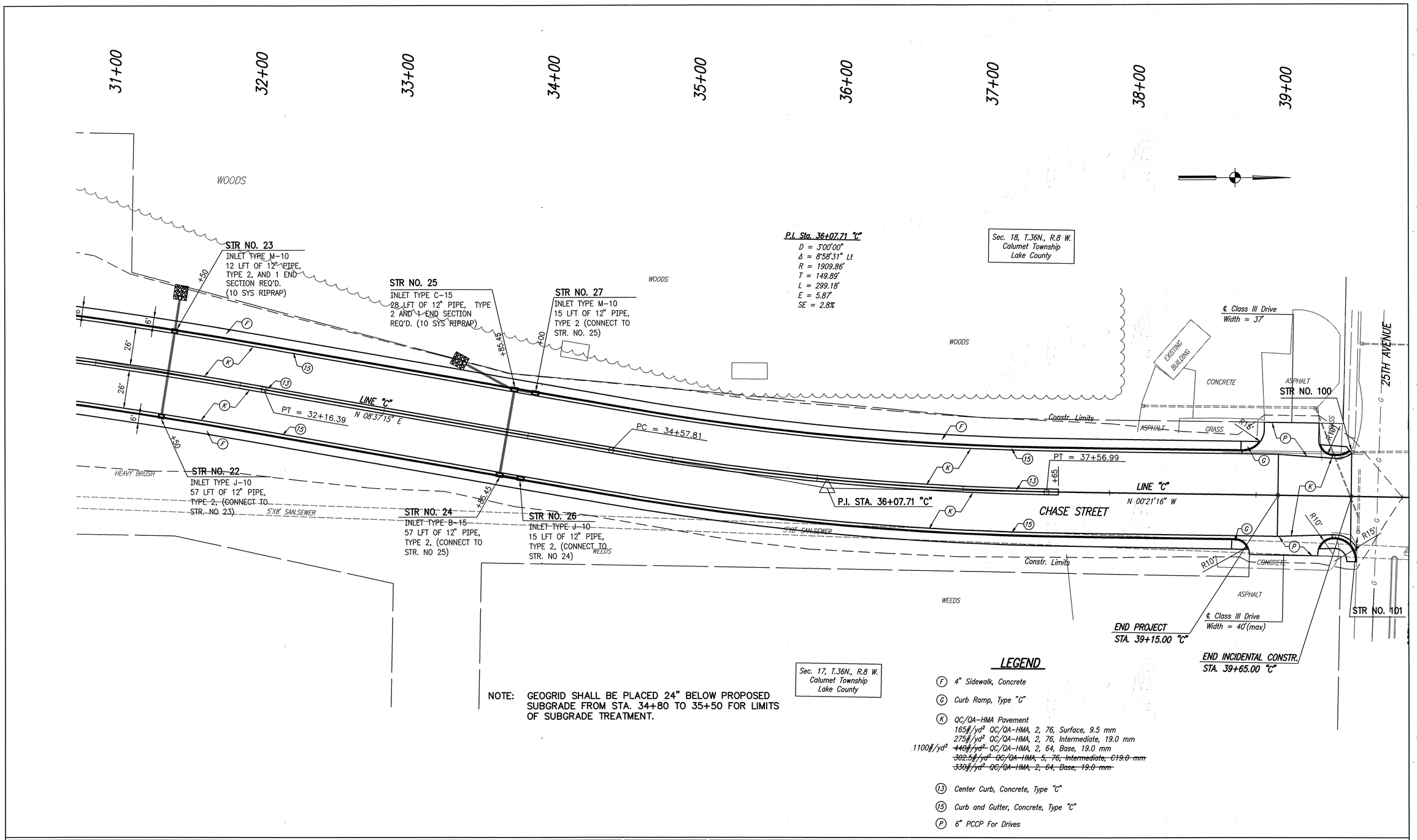

NOTE: GEOGRID SHALL BE PLACED 24" BELOW PROPOSED SUBGRADE FROM STA. 34+80 TO 35+50 FOR LIMITS OF SUBGRADE TREATMENT.

LEGEND

(F) 4" Sidewalk, Concrete

(G) Curb Ramp, Type "G"

(K) QC/QA-HMA Pavement
165#/yd² QC/QA-HMA, 2, 76, Surface, 9.5 mm
275#/yd² QC/QA-HMA, 2, 76, Intermediate, 19.0 mm
1100#/yd² ~~440#/yd²~~ QC/QA-HMA, 2, 64, Base, 19.0 mm
~~302.5#/yd² QC/QA-HMA, 5, 76, Intermediate, C19.0 mm~~
~~330#/yd² QC/QA-HMA, 2, 64, Base, 19.0 mm~~

(13) Center Curb, Concrete, Type "C"

(15) Curb and Gutter, Concrete, Type "C"

(P) 6" PCCP For Drives

REVISIONS	
DATE	REVISION
3-26-03	UPDATED CONSTRUCTION LIMITS.
4-03-03	REVISED CURVE DATA
7-03-03	REVISED PAVEMENT SECTION IN LEGEND
11/7/03	AS BUILT

RICHARD T. O'CONNOR
REGISTERED
No. 17778
STATE OF INDIANA
PROFESSIONAL ENGINEER

RECOMMENDED FOR APPROVAL Richard T. O'Connor
DESIGN ENGINEER DATE

DESIGNED: SCJ DRAWN: SCJ
CHECKED: DOC CHECKED: DOC

INDIANA DEPARTMENT OF TRANSPORTATION

CONSTRUCTION DETAILS
CHASE STREET OVER I-80/I-94

HORIZONTAL SCALE	BRIDGE FILE
1" = 30'	I-80-8-5467
VERTICAL SCALE	DESIGNATION
	9709110
SURVEY BOOK	SHEET
	9 of 57
CONTRACT	PROJECT
B-26411	IM-80-1(163)

Time: 14:33:55
Date: 1/21/2003
Scale: 1=30(PS)
Drawing File: 603020-1\CHASE\CD1.dwg,DWG (dduncan)

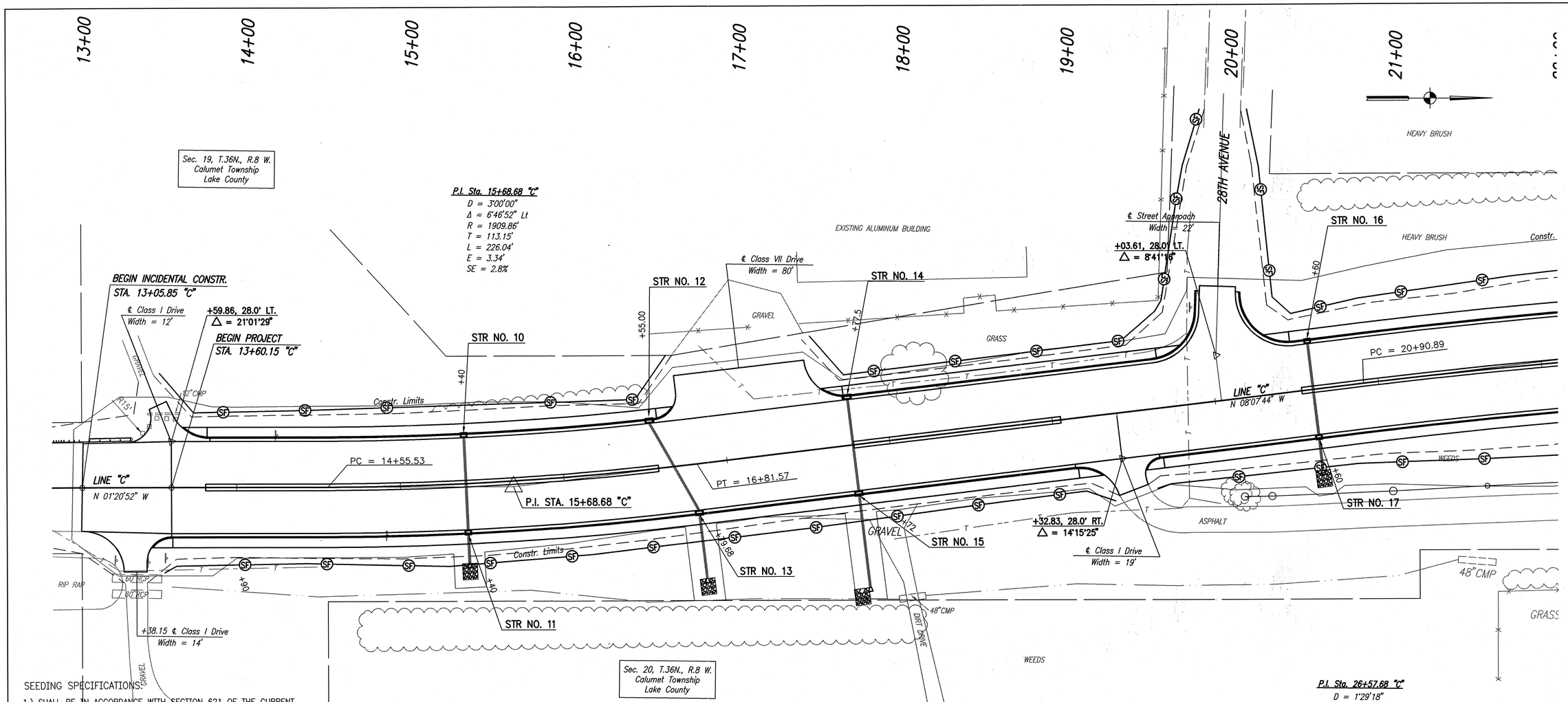

SEEDING SPECIFICATIONS:

1.) SHALL BE IN ACCORDANCE WITH SECTION 621 OF THE CURRENT INDIANA DEPARTMENT OF TRANSPORTATION STANDARD SPECIFICATIONS

RECOMMENDED EROSION CONTROL MEASURES:

1.) SHALL BE IN ACCORDANCE WITH SECTION 205 OF THE CURRENT INDIANA DEPARTMENT OF TRANSPORTATION & TYPICAL STANDARD SHEETS

2.) TOPSOIL SALVAGE AND UTILIZATION: REMOVAL OF TOPSOIL FROM ALL AREAS TO BE EXCAVATED OR FILLED. TOPSOIL SHOULD BE STORED AT A LOCATION WHERE IT WILL NOT INTERFERE WITH CONSTRUCTION OPERATIONS. THE USE OF A PERIMETER EROSION CONTROL METHOD SHALL BE REQUIRED AND AS DIRECTED BY THE PROJECT ENGINEER. ANY EXCESS EXCAVATION SHALL BE DISPOSED OF OUTSIDE OF THE R/W AS DIRECTED IN SECTION 203.10 & 202

3.) SURFACE ROUGHENING: ALL SLOPES WHICH ARE GRADED & NOT IMMEDIATELY STABILIZED WITH OTHER EROSION CONTROL MEASURES SHALL BE ROUGHENED AS DESCRIBED IN SECTION 203.09 UNTIL PERMANENT EROSION CONTROL MEASURES ARE PLACED.

4.) TREE CONSERVATION/PROTECTION: AS PER SECTION 201.02 THE CONTRACTOR SHALL, AT THE DIRECTION OF THE ENGINEER, ENDEAVOR TO SAVE AND PROTECT ANY VEGETATION WHICH DOES NOT IMPAIR CONSTRUCTION OF IMPROVEMENTS AS DESIGNED.

5.) MAINTENANCE SCHEDULE: MAINTENANCE OF ALL EROSION CONTROL PRACTICES SHOULD BE DONE AS NEEDED ON A WEEKLY BASIS AND AFTER ALL LARGE STORMS. A CONSTRUCTION SUPERVISOR SHOULD BE ASSIGNED THE TASK OF SEEING THAT ALL PRACTICES ARE MAINTAINED ACCORDING TO THE DESIGN CRITERIA. AND AS DESCRIBED IN SECTION 205.08

SOIL EROSION CONTROL SUMMARY:

1.) CONTRACTOR SHALL INSTALL ALL EROSION CONTROL METHODS AS SHOWN.

2.) GRADE THE SITE (SIDES OF SWALE, MOUNDS AND PONDS TO BE SEEDED AND MULCHED IMMEDIATELY UPON COMPLETION). DISTURBED AREAS SHOULD BE KEPT TO A MINIMUM AT ALL TIMES.

3.) CONTRACTOR SHALL CONTROL SOIL ACCUMULATION ON ALL STREETS SURROUNDING PROJECT BY INSTALLING STONE SURFACE AT ALL LOCATIONS WHERE CONSTRUCTION TRAFFIC LEAVES THE SITE. DUST SHALL BE KEPT TO A MINIMUM AS DESCRIBED IN SECTION 107.08(B).

4.) MAINTAIN ALL FILTERS AND TRAPS DURING CONSTRUCTION TO PREVENT ANY BLOCKAGES FROM ACCUMULATED SEDIMENT. ADDITIONAL SEEDING AND STRAW BALES MAY BE REQUIRED DURING CONSTRUCTION AS SPECIFIED BY THE ENGINEER OR SOIL CONSERVATION SERVICE.

LEGEND

SF — SILT FENCE

TEMPORARY EROSION AND SEDIMENT CONTROL

LINE	STATIONS BEGIN	STATIONS END	LT./RT.	PERIMETER PROTECTION QUANTITY (LFT.)
"C"	13+50	16+65	LT.	330
"C"	13+55	19+35	RT.	585
"C"	17+60	20+15	LT.	355
"C"	19+60	25+45	RT.	585
"C"	20+40	25+45	LT.	630
"C"	26+70	39+05	LT.	1145
"C"	26+65	39+50	RT.	1190
		TOTAL		4820

REVISIONS

DATE	REVISION
4-3-03	REVISED CURVE DATA
4-11-03	REVISED STR.'S NO. 12 & 14
11/07/03	AS BUILT

RICHARD T. O'CONNOR REGISTERED No. 17778 STATE OF INDIANA PROFESSIONAL ENGINEER

RECOMMENDED FOR APPROVAL — DESIGN ENGINEER — DATE

DESIGNED: SCJ DRAWN: SCJ

CHECKED: DOC CHECKED: DOC

INDIANA DEPARTMENT OF TRANSPORTATION

EROSION CONTROL
CHASE STREET OVER I-80/I-94

HORIZONTAL SCALE	BRIDGE FILE
1" = 30'	I-80-8-5467
VERTICAL SCALE	DESIGNATION
	9709110
SURVEY BOOK	SHEET
	10 of 57
CONTRACT	PROJECT
B-26411	IM-80-1(163)

Time: 16:42:28
Date: 12/4/2002
Scale: 1=30[PS]
Drawing File: 603020-1\CHASE\EROSION.dwg DWG (jones)

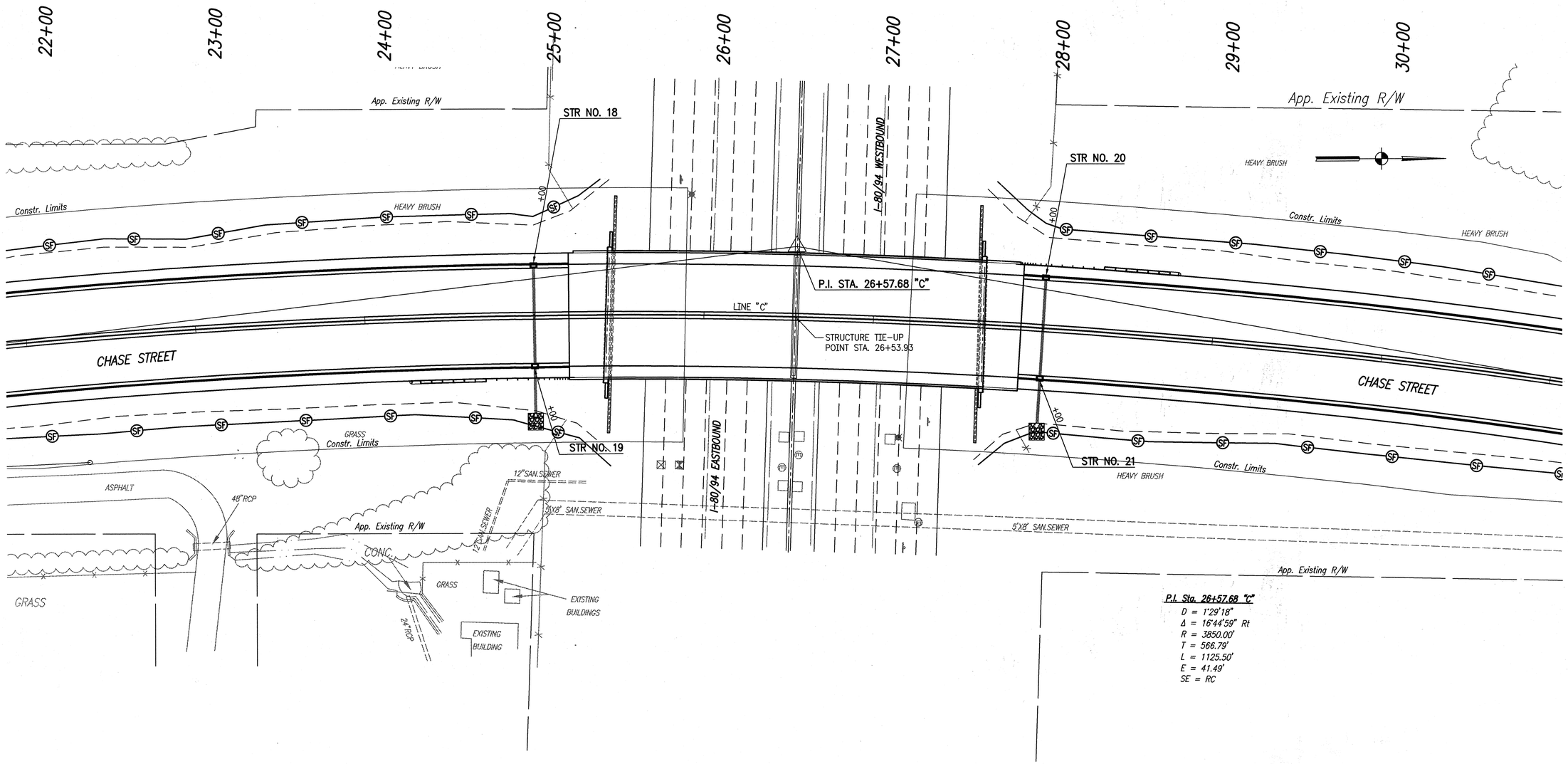

P.I. Sta. 26+57.68 "C"

$D = 1°29'18"$
$\Delta = 16°44'59"$ Rt
$R = 3850.00'$
$T = 566.79'$
$L = 1125.50'$
$E = 41.49'$
$SE = RC$

LEGEND

SF — SILT FENCE

REVISIONS	
DATE	REVISION
4-3-03	REVISED CURVE DATA
11/07/03	AS BUILT

RICHARD T. O'CONNOR REGISTERED No. 17778 STATE OF INDIANA PROFESSIONAL ENGINEER

RECOMMENDED FOR APPROVAL — DESIGN ENGINEER — DATE

DESIGNED: SCJ DRAWN: SCJ
CHECKED: DOC CHECKED: DOC

INDIANA DEPARTMENT OF TRANSPORTATION

EROSION CONTROL
CHASE STREET OVER I-80/I-94

HORIZONTAL SCALE	BRIDGE FILE
1" = 30'	I-80-8-5467
VERTICAL SCALE	DESIGNATION
	9709110
SURVEY BOOK	SHEET
	11 of 57
CONTRACT	PROJECT
B-26411	IM-80-1(163)

Time: 16:42:28
Date: 12/4/2002
Scale: 1=30(PS)
Drawing File: 603020-1\CHASE\EROSION.dwg.DWG (sjones)

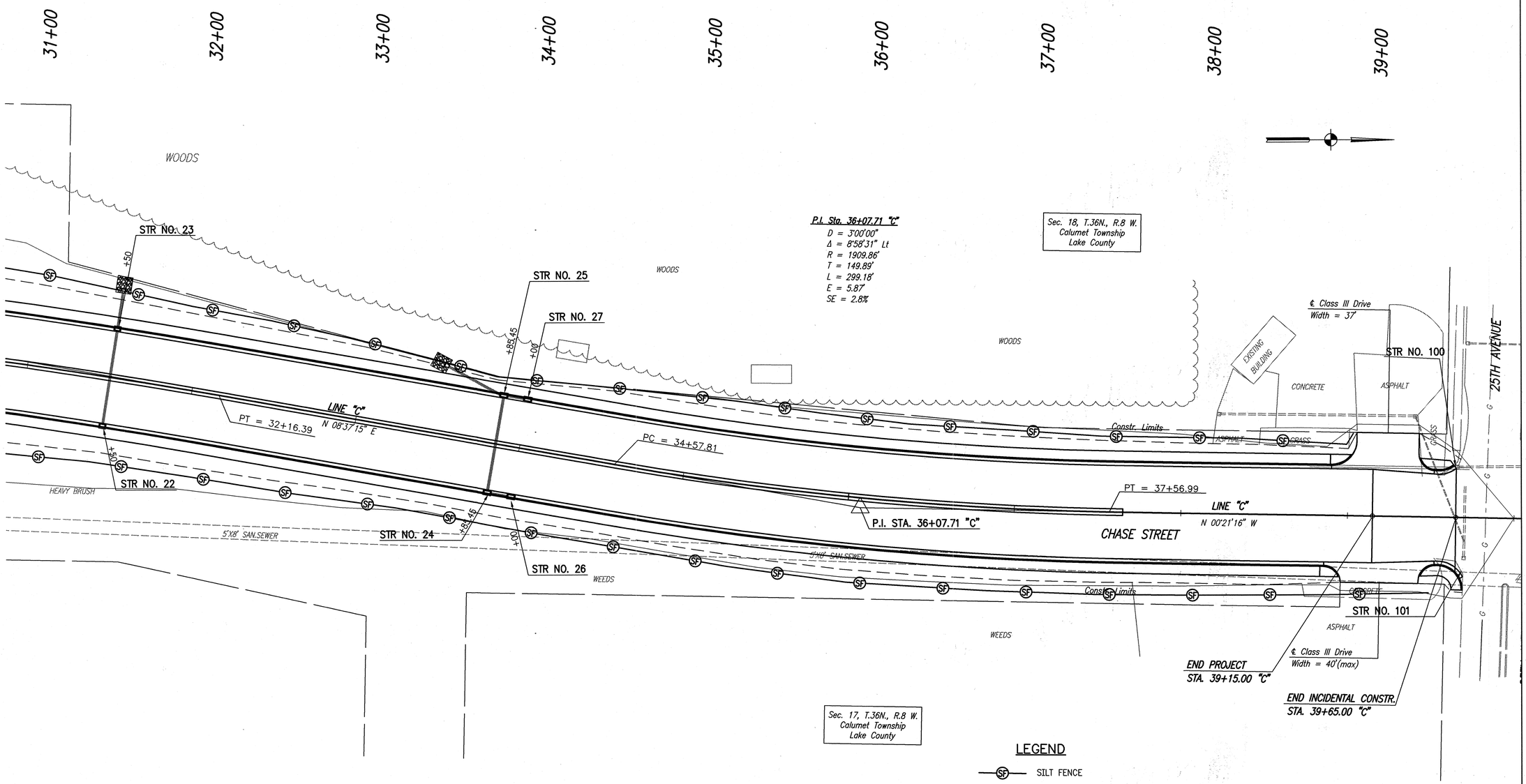

REVISIONS	
DATE	REVISION
4-3-03	REVISED CURVE DATA
11/07/03	AS BUILT

RICHARD T. O'CONNOR REGISTERED No. 17778 STATE OF INDIANA PROFESSIONAL ENGINEER

RECOMMENDED FOR APPROVAL Richard T. O'Connor
DESIGN ENGINEER DATE

DESIGNED: SCJ DRAWN: SCJ
CHECKED: DOC CHECKED: DOC

INDIANA DEPARTMENT OF TRANSPORTATION

EROSION CONTROL
CHASE STREET OVER I-80/I-94

HORIZONTAL SCALE	BRIDGE FILE
1" = 30'	I-80-8-5467
VERTICAL SCALE	DESIGNATION
	9709110
SURVEY BOOK	SHEET
	12 of 57
CONTRACT	PROJECT
B-26411	IM-80-1(163)

Time: 8:42:28
Date: 11/20/2002
Scale: 1=30(PS)
Drawing File: 60020-1\CHASE\EROSION.dwg DWG (ajones)

TEST BORING RECORD

CLIENT : Indiana Department of Transportation
PROJECT : Structure No.: I80-8-8467, Chase Street over I-80/I-94
LOCATION : Lake County, Indiana
PROJECT NO. : IM-80-1( ), Des. No.: 9709110, CTL No.: 02-050005
BORING NO.: TB-1-C
SHEET 1 OF 5
DATE STARTED : 02-20-02
DATE COMPLETED : 02-21-02

BORING ELEVATION : 617.0 Feet; STATION : 25+19; OFFSET : 30' Lt; LINE : "C"; DEPTH : 100.0 Feet
BORING METHOD : HSA; RIG TYPE : CME 550 ATV; CASING DIA. : 3.25"; CORE SIZE : —
HAMMER : Automatic; DRILLER : KO; TEMPERATURE : 30° F; WEATHER : Overcast

GROUNDWATER: Encountered at 28.6' At completion 24.0' Delayed Reading 21.0' at 24 hours Caved in at 23.0'

Stratum Elevation	Sample Depth	SOIL/MATERIAL DESCRIPTION	Stratum Depth	Sample Number	SPT per 6"	SPT per 12" (N)	Recovery (%)	Moisture Content (%)	Total Unit Weight (pcf)	Unconfined Compression (ksf)	LL	PL	PI
		Brown, Slightly Moist, Very Loose to Medium Dense, SAND (FILL) (Visual)		SS-1	2 2 3	5	100						
				SS-2	3 6 7	13	100						
	5			SS-3	1 6 9	15	100						
609.5		Brown, Slightly Moist, Dense to Medium Dense, SAND (FILL) (Visual)	7.5	SS-4	6 12 20	32	100						
	10			SS-5	4 10 15	25	100						
				SS-6	8 12 20	32	100						
	15			SS-7	9 13 17	30	100						
	20			SS-8	4 8 20	28	100						

Continued on next page

CTL Engineering of Indiana, Inc.
6848 Hillsdale Court
Indianapolis, Indiana 46250
Phone: 317-585-8277
Fax: 317-585-8621

BORING METHOD	SAMPLING METHOD	ABBREVIATIONS
HSA - Hollow Stem Auger	SS - Split Spoon Sample	* - Hand Penetrometer
SFA - Solid Flight Auger	ST - Shelby Tube Sample	LL - Liquid Limit
RC - Rock Coring	CR - Rock Core Sample	PL - Plastic Limit
MD - Mud Drilling	BS - Bag Sample	PI - Plasticity Index
WD - Wash Drilling	AC - Auger Cuttings	SPT - Standard Penetration Test
HA - Hand Auger		

TEST BORING RECORD 02-50050.GPJ CTLMET.GDT 6/11/02

TEST BORING RECORD

CLIENT : Indiana Department of Transportation
PROJECT : Structure No.: I80-8-8467, Chase Street over I-80/I-94
BORING NO.: TB-1-C
SHEET 2 OF 5

Stratum Elevation	Sample Depth	SOIL/MATERIAL DESCRIPTION	Stratum Depth	Sample Number	SPT per 6"	SPT per 12" (N)	Recovery (%)	Moisture Content (%)	Total Unit Weight (pcf)	Unconfined Compression (ksf)	LL	PL	PI
		Brown, Slightly Moist, Dense to Medium Dense, SAND (FILL) (Visual)											
594.0	25	Black, Moist, Medium Dense, CINDERS (FILL) (Visual)	23.0	SS-9	10 11 12	23	100						
589.0	30	Gray, Wet, Medium Dense, SAND with 1" Lense of Wood in SS-10 (Visual)	28.0	SS-10	6 8 4	12	89						
	35			SS-11	8 9 8	17	89						
578.5	40	Gray, Moist, Very Soft, SILTY CLAY A-7-6 As Lab 8	38.5	SS-12	2 1 1	2	100	39					
575.0	45	Gray, Moist, Soft, SILTY CLAY A-6 As Lab 1	42.0	SS-13	0 2 2	4	100	26	131.3	4.11 @ 18.3%			

Continued on next page

CTL Engineering of Indiana, Inc.
6848 Hillsdale Court
Indianapolis, Indiana 46250
Phone: 317-585-8277
Fax: 317-585-8621
BORING METHOD: HSA - Hollow Stem Auger; SFA - Solid Flight Auger; RC - Rock Coring; MD - Mud Drilling; WD - Wash Drilling; HA - Hand Auger
SAMPLING METHOD: SS - Split Spoon Sample; ST - Shelby Tube Sample; CR - Rock Core Sample; BS - Bag Sample; AC - Auger Cuttings
ABBREVIATIONS: * - Hand Penetrometer; LL - Liquid Limit; PL - Plastic Limit; PI - Plasticity Index; SPT - Standard Penetration Test

TEST BORING RECORD

CLIENT : Indiana Department of Transportation
PROJECT : Structure No.: I80-8-8467, Chase Street over I-80/I-94
BORING NO.: TB-1-C
SHEET 3 OF 5

Stratum Elevation	Sample Depth	SOIL/MATERIAL DESCRIPTION	Stratum Depth	Sample Number	SPT per 6"	SPT per 12" (N)	Recovery (%)	Moisture Content (%)	Total Unit Weight (pcf)	Unconfined Compression (ksf)	LL	PL	PI
570.0	50	Gray, Moist, Medium Stiff to to Very Soft to Soft, SILTY CLAY A-6 As Lab 10	47.0	SS-14	3 4 3	7	100	17					
	55			SS-15	0 0 0	0	100						
	60			SS-16	0 0 0	0	100	28	126.2	1.14 @ 22.3%			
	65			SS-17	0 1 3	4	100	23					
549.0	70	Gray, Moist, Medium Stiff, SILTY CLAY (TILL) A-6 As Lab 1	68.0	SS-18	0 4 5	9	100	21					

Continued on next page

CTL Engineering of Indiana, Inc.
6848 Hillsdale Court
Indianapolis, Indiana 46250
Phone: 317-585-8277
Fax: 317-585-8621
BORING METHOD: HSA - Hollow Stem Auger; SFA - Solid Flight Auger; RC - Rock Coring; MD - Mud Drilling; WD - Wash Drilling; HA - Hand Auger
SAMPLING METHOD: SS - Split Spoon Sample; ST - Shelby Tube Sample; CR - Rock Core Sample; BS - Bag Sample; AC - Auger Cuttings
ABBREVIATIONS: * - Hand Penetrometer; LL - Liquid Limit; PL - Plastic Limit; PI - Plasticity Index; SPT - Standard Penetration Test

TEST BORING RECORD

CLIENT : Indiana Department of Transportation
PROJECT : Structure No.: I80-8-8467, Chase Street over I-80/I-94
BORING NO.: TB-1-C
SHEET 4 OF 5

Stratum Elevation	Sample Depth	SOIL/MATERIAL DESCRIPTION	Stratum Depth	Sample Number	SPT per 6"	SPT per 12" (N)	Recovery (%)	Moisture Content (%)	Total Unit Weight (pcf)	Unconfined Compression (ksf)	LL	PL	PI
	75	Gray, Moist, Medium Stiff, SILTY CLAY (TILL) A-6 As Lab 1		SS-19	1 3 5	8	100						
539.0	80	Gray, Moist, Stiff, SILTY CLAY LOAM with Sand Seams (TILL) A-6 (10) Lab 3	78.0	SS-20	3 6 7	13	100	16			29	15	14
535.0	85	Gray, Moist, Medium Stiff, SILTY CLAY (TILL) A-6 As Lab 10	82.0	SS-21	0 0 10	10	100	21					
530.0	90	Gray, Moist, Very Dense, SILT A-4 (2) Lab 2	87.0	SS-22	16 28 46	74	100	20					
525.0	95	Gray, Moist, Hard, SILTY CLAY LOAM (TILL) A-6 As Lab 3	92.0	SS-23	7 8 23	31	89						

Continued on next page

CTL Engineering of Indiana, Inc.
6848 Hillsdale Court
Indianapolis, Indiana 46250
Phone: 317-585-8277
Fax: 317-585-8621
BORING METHOD: HSA - Hollow Stem Auger; SFA - Solid Flight Auger; RC - Rock Coring; MD - Mud Drilling; WD - Wash Drilling; HA - Hand Auger
SAMPLING METHOD: SS - Split Spoon Sample; ST - Shelby Tube Sample; CR - Rock Core Sample; BS - Bag Sample; AC - Auger Cuttings
ABBREVIATIONS: * - Hand Penetrometer; LL - Liquid Limit; PL - Plastic Limit; PI - Plasticity Index; SPT - Standard Penetration Test

TEST BORING RECORD

CLIENT : Indiana Department of Transportation
PROJECT : Structure No.: I80-8-8467, Chase Street over I-80/I-94
BORING NO.: TB-1-C
SHEET 5 OF 5

Stratum Elevation	Sample Depth	SOIL/MATERIAL DESCRIPTION	Stratum Depth	Sample Number	SPT per 6"	SPT per 12" (N)	Recovery (%)	Moisture Content (%)	Total Unit Weight (pcf)	Unconfined Compression (ksf)	LL	PL	PI
517.0	100	Gray, Moist, Hard, SILTY CLAY LOAM (TILL) A-6 As Lab 3	100.0	SS-24	8 22 19	41	100						
		Bottom of Boring at 100.0 feet											
		Boring backfilled with soil cuttings.											

CTL Engineering of Indiana, Inc.
6848 Hillsdale Court
Indianapolis, Indiana 46250
Phone: 317-585-8277
Fax: 317-585-8621
BORING METHOD: HSA - Hollow Stem Auger; SFA - Solid Flight Auger; RC - Rock Coring; MD - Mud Drilling; WD - Wash Drilling; HA - Hand Auger
SAMPLING METHOD: SS - Split Spoon Sample; ST - Shelby Tube Sample; CR - Rock Core Sample; BS - Bag Sample; AC - Auger Cuttings
ABBREVIATIONS: * - Hand Penetrometer; LL - Liquid Limit; PL - Plastic Limit; PI - Plasticity Index; SPT - Standard Penetration Test

PILE LOADS (ULTIMATE BEARING)

BENT	No. 1	No. 2	No. 3
ALLOWABLE DESIGN LOAD (tons)	90	110	90
FACTOR OF SAFETY	2.0	2.0	2.0
FACTORED DESIGN LOAD (tons)	180	220	180
SCOUR ZONE FRICTION (tons)	--	--	--
DOWN DRAG FRICTION (tons)	--	--	--
ULTIMATE LOAD (BEARING) (tons)	180	220	180

TESTING METHOD:
BY PILE DRIVING ANALYZER (PDA)

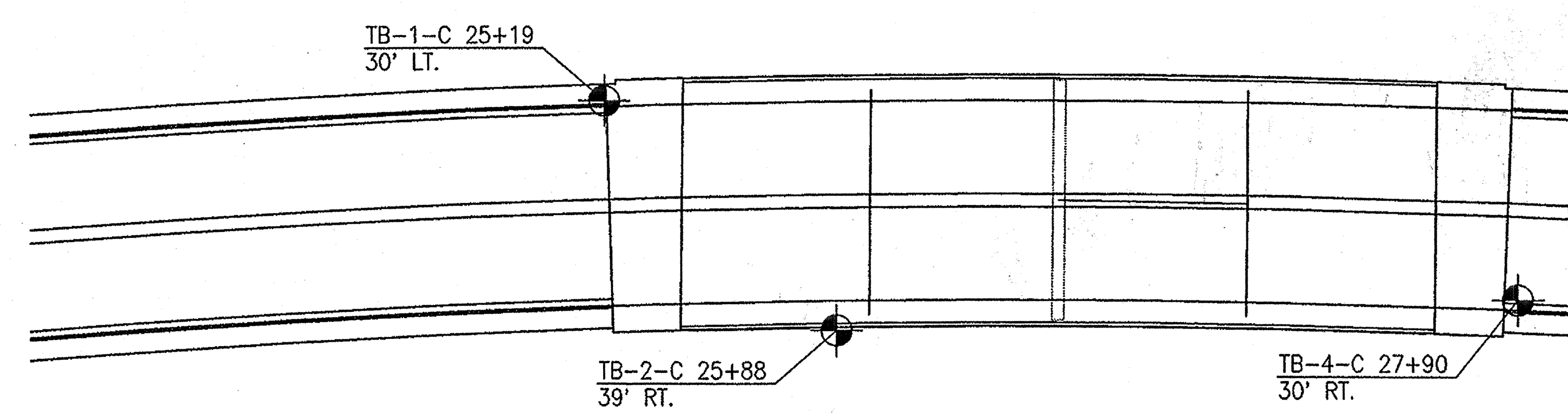

BORING PLAN
SCALE: 1"-40'

NOTES
SEE SHEETS 12B & 12C FOR ADDITIONAL BORINGS.

REVISIONS	
DATE	REVISION
11/07/03	AS BUILT

RICHARD T. O'CONNOR REGISTERED No. 17778 STATE OF INDIANA PROFESSIONAL ENGINEER

RECOMMENDED FOR APPROVAL Richard T. O'Connor DESIGN ENGINEER DATE

DESIGNED: SCJ DRAWN: MJF
CHECKED: CHECKED: DRD

INDIANA
DEPARTMENT OF TRANSPORTATION

SOIL BORINGS
CHASE STREET OVER I-80/I-94

HORIZONTAL SCALE	BRIDGE FILE
AS NOTED	I-80-8-5467
VERTICAL SCALE	DESIGNATION
	9709110
SURVEY BOOK	SHEET
	12A of 57
CONTRACT	PROJECT
B-26411	IM-80-1(163)

Time: 7:42:0
Date: 1/6/2003
Scale: 1=40(PS)
Drawing File: 603020-1\CHASE\SOIL-BOR.dwg.DWG (mfrancis)

TEST BORING RECORD

CLIENT : Indiana Department of Transportation
PROJECT : Structure No.: I80-8-8467, Chase Street over I-80/I-94
LOCATION : Lake County, Indiana
PROJECT NO. : IM-80-1( ), Des. No.: 9709110, CTL No.: 02-050005

BORING NO.: TB-2-C
SHEET 1 OF 4
DATE STARTED : 02-28-02
DATE COMPLETED : 02-28-02

BORING ELEVATION : 596.0 Feet
STATION : 25+88
OFFSET : 39' Rt
LINE : "C"
DEPTH : 90.0 Feet

BORING METHOD : HSA
RIG TYPE : CME 550 ATV
CASING DIA. : 3.25"
CORE SIZE : —

HAMMER : Automatic
DRILLER : KO
TEMPERATURE : 30° F
WEATHER : Overcast

GROUNDWATER: ▼ Encountered at 8.5' ▼ At completion 6.0' ▼ Delayed Reading Dry at 17 days ✱ Caved in at 4.0'

Stratum Elevation	Sample Depth	SOIL/MATERIAL DESCRIPTION	Stratum Depth	Sample Number	SPT per 6"	SPT per 12" (N)	Recovery (%)	Moisture Content (%)	Total Unit Weight (pcf)	Unconfined Compression (ksf)	Atterberg Limits LL	PL	PI
592.5	5	Brown, Slightly Moist, Very Loose, SAND (Possible Fill) (Visual)	3.5	SS-1	2 2 2	4	89						
587.5	10	Dark Brown to Brown, Moist, Loose to Medium Dense, SAND (Visual)	8.5	SS-2	3 5 5	10	100						
				SS-3	4 5 6	11	100						
				SS-4	3 5 6	11	89						
	15	Gray, Wet, Medium Dense to Very Loose, SAND with Traces of Wood in SS-5 (Visual)		SS-5	4 8 6	16	100						
	20			SS-6	2 1 1	2	100						

Continued on next page

CTL Engineering of Indiana, Inc.
6848 Hillsdale Court
Indianapolis, Indiana 46250
Phone: 317-585-8277
Fax: 317-585-8621

BORING METHOD	SAMPLING METHOD	ABBREVIATIONS
HSA - Hollow Stem Auger	SS - Split Spoon Sample	* - Hand Penetrometer
SFA - Solid Flight Auger	ST - Shelby Tube Sample	LL - Liquid Limit
RC - Rock Coring	CR - Rock Core Sample	PL - Plastic Limit
MD - Mud Drilling	BS - Bag Sample	PI - Plasticity Index
WD - Wash Drilling	AC - Auger Cuttings	SPT - Standard Penetration Test
HA - Hand Auger		

TEST BORING RECORD

CLIENT : Indiana Department of Transportation
PROJECT : Structure No.: I80-8-8467, Chase Street over I-80/I-94

BORING NO.: TB-2-C
SHEET 3 OF 4

Stratum Elevation	Sample Depth	SOIL/MATERIAL DESCRIPTION	Stratum Depth	Sample Number	SPT per 6"	SPT per 12" (N)	Recovery (%)	Moisture Content (%)	Total Unit Weight (pcf)	Unconfined Compression (ksf)	Atterberg Limits LL	PL	PI
544.0	50	Gray, Moist, Soft to Very Soft, SILTY CLAY A-6 As Lab 10	52.0	SS-12	0 0 2	2	100						
538.5	55	Gray, Moist, Medium Dense, SILT A-4 As Lab 2	57.5	SS-13	10 14 11	25	100	18					
	60			SS-14	3 3 3	6	100	22	134.8	2.22 @ 22.3%			
	65	Gray, Moist, Medium Stiff to Very Soft, SILTY CLAY (TILL) A-6 As Lab 10		SS-15	0 0 3	3	100	20					
528.5	70	Gray, Moist, Dense, SILT A-4 As Lab 2	67.5	SS-16	9 15 26	41	100	12					
523.5			72.5										

Continued on next page

CTL Engineering of Indiana, Inc.
6848 Hillsdale Court
Indianapolis, Indiana 46250
Phone: 317-585-8277
Fax: 317-585-8621

BORING METHOD	SAMPLING METHOD	ABBREVIATIONS
HSA - Hollow Stem Auger	SS - Split Spoon Sample	* - Hand Penetrometer
SFA - Solid Flight Auger	ST - Shelby Tube Sample	LL - Liquid Limit
RC - Rock Coring	CR - Rock Core Sample	PL - Plastic Limit
MD - Mud Drilling	BS - Bag Sample	PI - Plasticity Index
WD - Wash Drilling	AC - Auger Cuttings	SPT - Standard Penetration Test
HA - Hand Auger		

TEST BORING RECORD

CLIENT : Indiana Department of Transportation
PROJECT : Structure No.: I80-8-8467, Chase Street over I-80/I-94

BORING NO.: TB-2-C
SHEET 2 OF 4

Stratum Elevation	Sample Depth	SOIL/MATERIAL DESCRIPTION	Stratum Depth	Sample Number	SPT per 6"	SPT per 12" (N)	Recovery (%)	Moisture Content (%)	Total Unit Weight (pcf)	Unconfined Compression (ksf)	Atterberg Limits LL	PL	PI
573.5		Gray, Wet, Medium Dense to Very Loose, SAND with Traces of Wood in SS-5 (Visual)	22.5										
	25	Gray, Moist, Stiff, SILTY CLAY A-6 As Lab 1		SS-7	6 6 7	13	100	18					
569.0			27.0										
	30			SS-8	1 2 3	5	89						
	35			SS-9	0 0 0	0	100						
		Gray, Moist, Soft to Very Soft, SILTY CLAY A-6 As Lab 10											
	40			SS-10	0 0 2	2	100						
	45			SS-11	0 0 1	1	100	23					

Continued on next page

CTL Engineering of Indiana, Inc.
6848 Hillsdale Court
Indianapolis, Indiana 46250
Phone: 317-585-8277
Fax: 317-585-8621

BORING METHOD	SAMPLING METHOD	ABBREVIATIONS
HSA - Hollow Stem Auger	SS - Split Spoon Sample	* - Hand Penetrometer
SFA - Solid Flight Auger	ST - Shelby Tube Sample	LL - Liquid Limit
RC - Rock Coring	CR - Rock Core Sample	PL - Plastic Limit
MD - Mud Drilling	BS - Bag Sample	PI - Plasticity Index
WD - Wash Drilling	AC - Auger Cuttings	SPT - Standard Penetration Test
HA - Hand Auger		

TEST BORING RECORD

CLIENT : Indiana Department of Transportation
PROJECT : Structure No.: I80-8-8467, Chase Street over I-80/I-94

BORING NO.: TB-2-C
SHEET 4 OF 4

Stratum Elevation	Sample Depth	SOIL/MATERIAL DESCRIPTION	Stratum Depth	Sample Number	SPT per 6"	SPT per 12" (N)	Recovery (%)	Moisture Content (%)	Total Unit Weight (pcf)	Unconfined Compression (ksf)	Atterberg Limits LL	PL	PI
518.5	75	Gray, Slightly Moist, Hard, SILTY CLAY LOAM with Silt Seams (TILL) A-6 As Lab 3	77.5	SS-17	8 14 23	37	100	14					
512.5	80	Gray, Moist, Very Dense, SILT A-4 As Lab 2	83.5	SS-18	10 25 31	56	100						
	85	Gray, Moist, Medium Stiff, SILTY CLAY (TILL) A-6 As Lab 1		SS-19	4 7 11	18	100						
507.0		Gray, Moist, Dense, SILT A-4 As Lab 2	89.0	SS-20	6 11 31	42	120	20					
506.0	90	Bottom of Boring at 90.0 feet	90.0										
		Boring backfilled with soil cuttings.											
	95												

CTL Engineering of Indiana, Inc.
6848 Hillsdale Court
Indianapolis, Indiana 46250
Phone: 317-585-8277
Fax: 317-585-8621

BORING METHOD	SAMPLING METHOD	ABBREVIATIONS
HSA - Hollow Stem Auger	SS - Split Spoon Sample	* - Hand Penetrometer
SFA - Solid Flight Auger	ST - Shelby Tube Sample	LL - Liquid Limit
RC - Rock Coring	CR - Rock Core Sample	PL - Plastic Limit
MD - Mud Drilling	BS - Bag Sample	PI - Plasticity Index
WD - Wash Drilling	AC - Auger Cuttings	SPT - Standard Penetration Test
HA - Hand Auger		

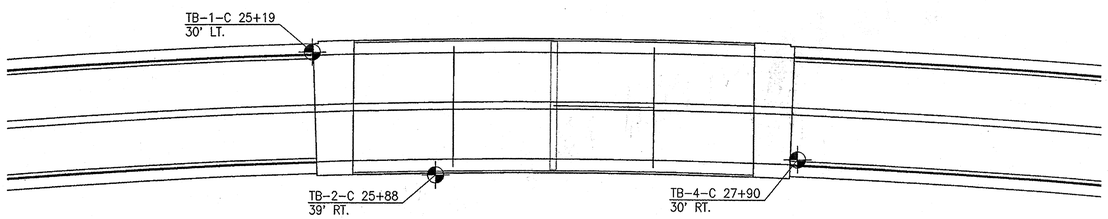

BORING PLAN
SCALE: 1"=40'

NOTES
SEE SHEETS 12A & 12C FOR ADDITIONAL BORINGS.

REVISIONS	
DATE	REVISION
11/07/03	AS BUILT

RICHARD T. O'CONNOR REGISTERED No. 17778 STATE OF INDIANA PROFESSIONAL ENGINEER

RECOMMENDED FOR APPROVAL Richard T. O'Connor
DESIGN ENGINEER DATE

DESIGNED: SCJ DRAWN: MJF
CHECKED: CHECKED: DRD

INDIANA
DEPARTMENT OF TRANSPORTATION

SOIL BORINGS
CHASE STREET OVER I-80/I-94

HORIZONTAL SCALE	BRIDGE FILE
AS NOTED	I-80-8-5467
VERTICAL SCALE	DESIGNATION
	9709110
SURVEY BOOK	SHEET
	12B of 57
CONTRACT	PROJECT
B-26411	IM-80-1(163)

Time: 7:42p
Date: 1/16/2003
User: mfrancis
Drawing File: 650020-1\CHASE\SOIL-BOR.dwg,DWG (mfrancis)

TEST BORING RECORD

CLIENT : Indiana Department of Transportation
PROJECT : Structure No.: I80-8-8467, Chase Street over I-80/I-94
LOCATION : Lake County, Indiana
PROJECT NO. : IM-80-1( ), Des. No.: 9709110, CTL No.: 02-050005

BORING NO.: TB-4-C
SHEET 1 OF 5
DATE STARTED : 02-18-02
DATE COMPLETED : 02-20-02

BORING ELEVATION : 616.0 Feet
STATION : 27+90
OFFSET : 30' Rt
LINE : "C"
DEPTH : 100.0 Feet

BORING METHOD : HSA
RIG TYPE : CME 550 ATV
CASING DIA. : 3.25"
CORE SIZE : --

HAMMER : Automatic
DRILLER : KO
TEMPERATURE : 40° F
WEATHER : Overcast

GROUNDWATER: Encountered at 24.0' At completion Dry Delayed Reading 22.5' at 2 days Caved in at 23.0'

Stratum Elevation	Sample Depth	SOIL/MATERIAL DESCRIPTION	Stratum Depth	Sample Number	SPT per 6"	SPT per 12" (N)	Recovery (%)	Moisture Content (%)	Total Unit Weight (pcf)	Unconfined Compression (ksf)	Atterberg Limits LL	PL	PI
615.5		SAND & GRAVEL (6") (Visual)	9.5										
		Brown, Slightly Moist, Loose to Medium Dense to Very Loose, SAND with Traces of Roots in SS-1 (FILL) (Visual)		SS-1	1 2 4	6	100						
	5			SS-2	5 7 8	15	100						
				SS-3	5 7 9	16	100						
	10			SS-4	2 3 2	5	100						
				SS-5	3 1 3	4	100						
603.5			12.5										
		Brown, Slightly Moist, Dense to Medium Dense, SAND (FILL) (Visual)		SS-6	9 17 28	45	100						
	15			SS-7	5 18 20	38	100						
	20			SS-8	12 13 16	29	100						

Continued on next page

CTL Engineering of Indiana, Inc.
6848 Hillsdale Court
Indianapolis, Indiana 46250
Phone: 317-585-8277
Fax: 317-585-8621

BORING METHOD	SAMPLING METHOD	ABBREVIATIONS
HSA - Hollow Stem Auger	SS - Split Spoon Sample	* - Hand Penetrometer
SFA - Solid Flight Auger	ST - Shelby Tube Sample	LL - Liquid Limit
RC - Rock Coring	CR - Rock Core Sample	PL - Plastic Limit
MD - Mud Drilling	BS - Bag Sample	PI - Plasticity Index
WD - Wash Drilling	AC - Auger Cuttings	SPT - Standard Penetration Test
HA - Hand Auger		

TEST BORING RECORD

CLIENT : Indiana Department of Transportation
PROJECT : Structure No.: I80-8-8467, Chase Street over I-80/I-94

BORING NO.: TB-4-C
SHEET 3 OF 5

Stratum Elevation	Sample Depth	SOIL/MATERIAL DESCRIPTION	Stratum Depth	Sample Number	SPT per 6"	SPT per 12" (N)	Recovery (%)	Moisture Content (%)	Total Unit Weight (pcf)	Unconfined Compression (ksf)	Atterberg Limits LL	PL	PI
569.0			47.0										
	50			SS-14	2 2 2	4	100						
	55			SS-15	0 0 0	0	100	27			37	18	19
	60	Gray, Moist, Soft to Very Soft to Medium Stiff, SILTY CLAY (TILL) A-6 (10) Lab 10		SS-16	4 3 2	5	100						
	65			SS-17	1 2 3	5	100						
	70			SS-18	2 3 4	7	100	22	126.4	1.69 @ 23.0%			
544.0			72.0										

Continued on next page

CTL Engineering of Indiana, Inc.
6848 Hillsdale Court
Indianapolis, Indiana 46250
Phone: 317-585-8277
Fax: 317-585-8621

BORING METHOD	SAMPLING METHOD	ABBREVIATIONS
HSA - Hollow Stem Auger	SS - Split Spoon Sample	* - Hand Penetrometer
SFA - Solid Flight Auger	ST - Shelby Tube Sample	LL - Liquid Limit
RC - Rock Coring	CR - Rock Core Sample	PL - Plastic Limit
MD - Mud Drilling	BS - Bag Sample	PI - Plasticity Index
WD - Wash Drilling	AC - Auger Cuttings	SPT - Standard Penetration Test
HA - Hand Auger		

TEST BORING RECORD

CLIENT : Indiana Department of Transportation
PROJECT : Structure No.: I80-8-8467, Chase Street over I-80/I-94

BORING NO.: TB-4-C
SHEET 5 OF 5

Stratum Elevation	Sample Depth	SOIL/MATERIAL DESCRIPTION	Stratum Depth	Sample Number	SPT per 6"	SPT per 12" (N)	Recovery (%)	Moisture Content (%)	Total Unit Weight (pcf)	Unconfined Compression (ksf)	Atterberg Limits LL	PL	PI
		Gray, Moist, Very Dense to Dense, SILT A-4 (2) Lab 2		SS-24	17 20 22	42	78						
516.0	100		100.0										
		Bottom of Boring at 100.0 feet											
		Boring backfilled with soil cuttings.											
	105												
	110												
	115												
	120												

CTL Engineering of Indiana, Inc.
6848 Hillsdale Court
Indianapolis, Indiana 46250
Phone: 317-585-8277
Fax: 317-585-8621

BORING METHOD	SAMPLING METHOD	ABBREVIATIONS
HSA - Hollow Stem Auger	SS - Split Spoon Sample	* - Hand Penetrometer
SFA - Solid Flight Auger	ST - Shelby Tube Sample	LL - Liquid Limit
RC - Rock Coring	CR - Rock Core Sample	PL - Plastic Limit
MD - Mud Drilling	BS - Bag Sample	PI - Plasticity Index
WD - Wash Drilling	AC - Auger Cuttings	SPT - Standard Penetration Test
HA - Hand Auger		

TEST BORING RECORD

CLIENT : Indiana Department of Transportation
PROJECT : Structure No.: I80-8-8467, Chase Street over I-80/I-94

BORING NO.: TB-4-C
SHEET 2 OF 5

Stratum Elevation	Sample Depth	SOIL/MATERIAL DESCRIPTION	Stratum Depth	Sample Number	SPT per 6"	SPT per 12" (N)	Recovery (%)	Moisture Content (%)	Total Unit Weight (pcf)	Unconfined Compression (ksf)	Atterberg Limits LL	PL	PI
		Brown, Slightly Moist, Dense to Medium Dense, SAND (FILL) (Visual)											
593.0			23.0										
	25			SS-9	9 12 13	25	100						
	30	Light Gray, Wet, Medium Dense to Very Loose, SAND with 1/4" Lense of Wood in SS-11 (Visual)		SS-10	6 4 8	12	100						
	35			SS-11	0 2 2	4	100						
577.5			38.5										
	40			SS-12	3 3 3	6	67	24			38	20	16
	45	Gray, Moist, Medium Stiff to Stiff, SILTY CLAY (TILL) A-4 (15) Lab 1		SS-13	4 6 8	14	100	24	133.1	4.85 @ 22.3%			

Continued on next page

CTL Engineering of Indiana, Inc.
6848 Hillsdale Court
Indianapolis, Indiana 46250
Phone: 317-585-8277
Fax: 317-585-8621

BORING METHOD	SAMPLING METHOD	ABBREVIATIONS
HSA - Hollow Stem Auger	SS - Split Spoon Sample	* - Hand Penetrometer
SFA - Solid Flight Auger	ST - Shelby Tube Sample	LL - Liquid Limit
RC - Rock Coring	CR - Rock Core Sample	PL - Plastic Limit
MD - Mud Drilling	BS - Bag Sample	PI - Plasticity Index
WD - Wash Drilling	AC - Auger Cuttings	SPT - Standard Penetration Test
HA - Hand Auger		

TEST BORING RECORD

CLIENT : Indiana Department of Transportation
PROJECT : Structure No.: I80-8-8467, Chase Street over I-80/I-94

BORING NO.: TB-4-C
SHEET 4 OF 5

Stratum Elevation	Sample Depth	SOIL/MATERIAL DESCRIPTION	Stratum Depth	Sample Number	SPT per 6"	SPT per 12" (N)	Recovery (%)	Moisture Content (%)	Total Unit Weight (pcf)	Unconfined Compression (ksf)	Atterberg Limits LL	PL	PI
	75			SS-19	5 4 6	10	100						
	80	Gray, Moist to Very Moist, Medium Stiff to Stiff, SILTY CLAY (TILL) A-6 As Lab 1		SS-20	6 5 5	10	67	24					
	85			SS-21	3 4 7	11	100						
529.0			87.0										
	90			SS-22	40 36 28	64	100	23			22	18	4
	95	Gray, Moist, Very Dense to Dense, SILT A-4 (2) Lab 2		SS-23	20 25 22	47	89						

Continued on next page

CTL Engineering of Indiana, Inc.
6848 Hillsdale Court
Indianapolis, Indiana 46250
Phone: 317-585-8277
Fax: 317-585-8621

BORING METHOD	SAMPLING METHOD	ABBREVIATIONS
HSA - Hollow Stem Auger	SS - Split Spoon Sample	* - Hand Penetrometer
SFA - Solid Flight Auger	ST - Shelby Tube Sample	LL - Liquid Limit
RC - Rock Coring	CR - Rock Core Sample	PL - Plastic Limit
MD - Mud Drilling	BS - Bag Sample	PI - Plasticity Index
WD - Wash Drilling	AC - Auger Cuttings	SPT - Standard Penetration Test
HA - Hand Auger		

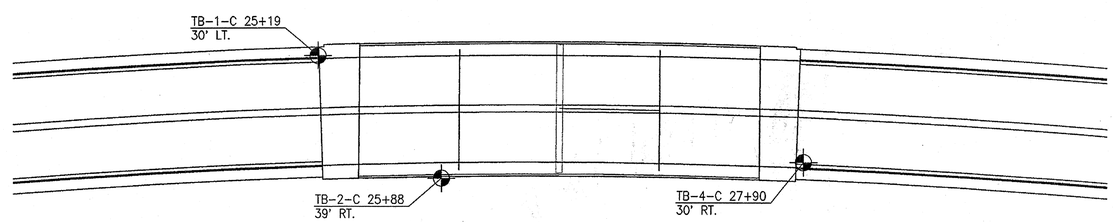

BORING PLAN
SCALE: 1"=40'

NOTES
SEE SHEETS 12A & 12B FOR ADDITIONAL BORINGS.

REVISIONS	
DATE	REVISION
11/07/03	AS BUILT

RICHARD T. O'CONNOR REGISTERED No. 17778 STATE OF INDIANA PROFESSIONAL ENGINEER

RECOMMENDED FOR APPROVAL Richard T. O'Connor
DESIGN ENGINEER DATE

DESIGNED: SCJ DRAWN: MJF
CHECKED: CHECKED: DRD

INDIANA
DEPARTMENT OF TRANSPORTATION

SOIL BORINGS
CHASE STREET OVER I-80/I-94

HORIZONTAL SCALE	BRIDGE FILE
AS NOTED	I-80-8-5467
VERTICAL SCALE	DESIGNATION
	9709110
SURVEY BOOK	SHEET
	12C of 57
CONTRACT	PROJECT
B-26411	IM-80-1(163)

Time: 7:42:0
Date: 1/6/2003
Scale: 1:1 Plot Date: 1/6/2003
Drawing File: 630020-I:\CHASE\SOIL-BOR.dwg.DWG (mfrancis)

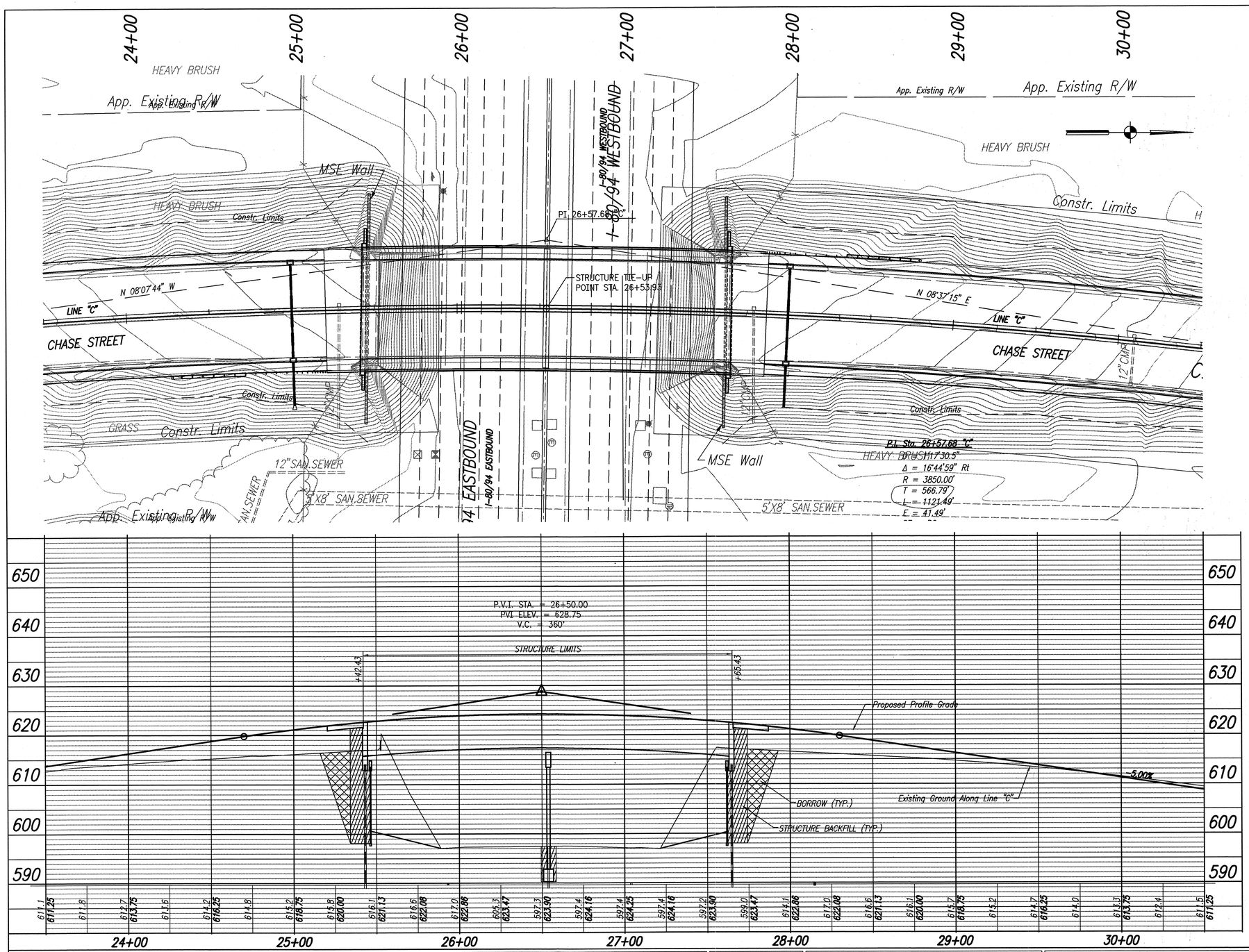

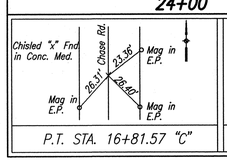

P.T. STA. 16+81.57 "C"

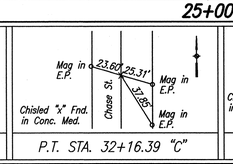

P.T. STA. 32+16.39 "C"

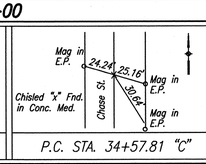

P.C. STA. 34+57.81 "C"

UTILITY OWNERS

WATER: Indiana American Water Co.
650 Madison Street
Gary, Indiana 46401
(219) 880-2328

TELEPHONE: Ameritech
302 South East St.
Crown Point, Indiana 46307
Angelo Lamantia
(219) 662-4418

ELECTRIC: NIPSCO
801 East 86th St.
Merrillville, Indiana 46410
Jim Fitzer
(219) 647-4299

GAS: NIPSCO
1460 East 15th Ave.
Gary, Indiana 46402
Dennis Wozniak
(219) 886-5693

GAS: Wolverine Pipe Line Co.
8105 Valleywood Lane
Portage, Michigan 49024
Fred Hipshear
(616) 323-2491

EXISTING STRUCTURE

The Existing Four Span Continuous Steel Beam Bridge to be Removed.

REVISIONS	
DATE	REVISION
02-26-03	MISCELLANEOUS MINOR REVISION
4-3-03	REVISED CURVE DATA
4-11-03	ADDED MISSING VERTICAL CURVE DATA
11/07/03	AS BUILT

CONTINUOUS COMPOSITE BEAM BRIDGE
2 SPANS @ 109'-9, SKEW: VARIES
2-28'-0 CLEAR ROADWAYS
CHASE STREET OVER I-80/94

RICHARD T. O'CONNOR REGISTERED No. 17778 STATE OF INDIANA PROFESSIONAL ENGINEER

RECOMMENDED FOR APPROVAL Richard T. O'Connor
DESIGN ENGINEER DATE

DESIGNED: SCJ DRAWN: SCJ
CHECKED: DOC CHECKED: DOC

INDIANA DEPARTMENT OF TRANSPORTATION

LAYOUT
CHASE STREET OVER I-80/I-94

HORIZONTAL SCALE	BRIDGE FILE
1" = 30'	I-80-8-5467
VERTICAL SCALE	DESIGNATION
1" = 10'	9709110
SURVEY BOOK	SHEET
	13 of 57
CONTRACT	PROJECT
B-26411	IM-80-1(163)

Time: 13:59.0
Date: 1/27/2003
Scale: 1=30(PS)
Drawing File: 603020-1\CHASE\CHASE-13.dwg.DWG (dduncan)

STRUCTURE TO BE BUILT IN A 360' VERTICAL CURVE

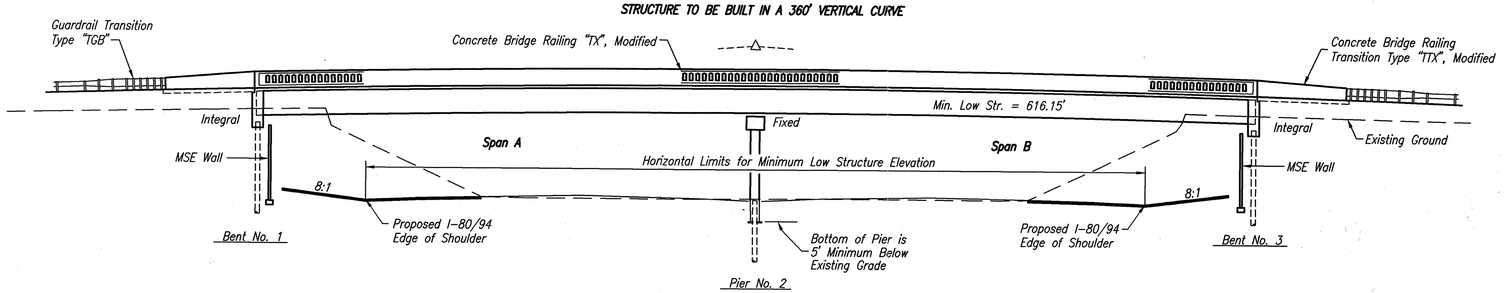

ELEVATION

Scale: 1/16" = 1'-0

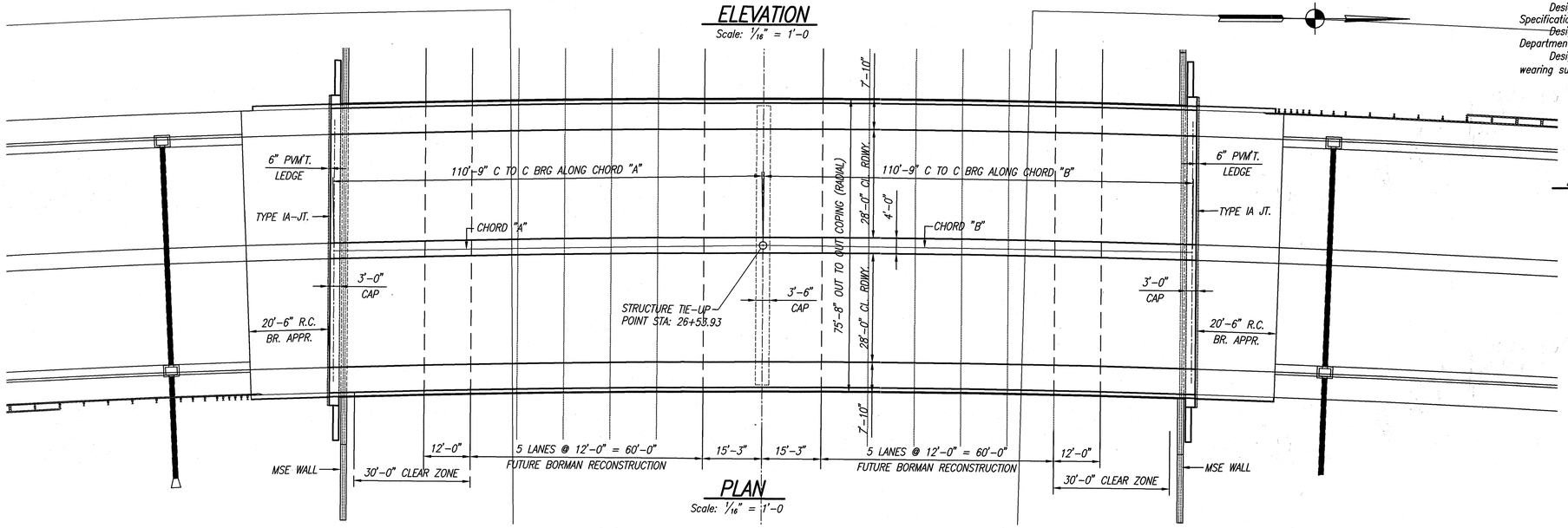

PLAN

Scale: 1/16" = 1'-0

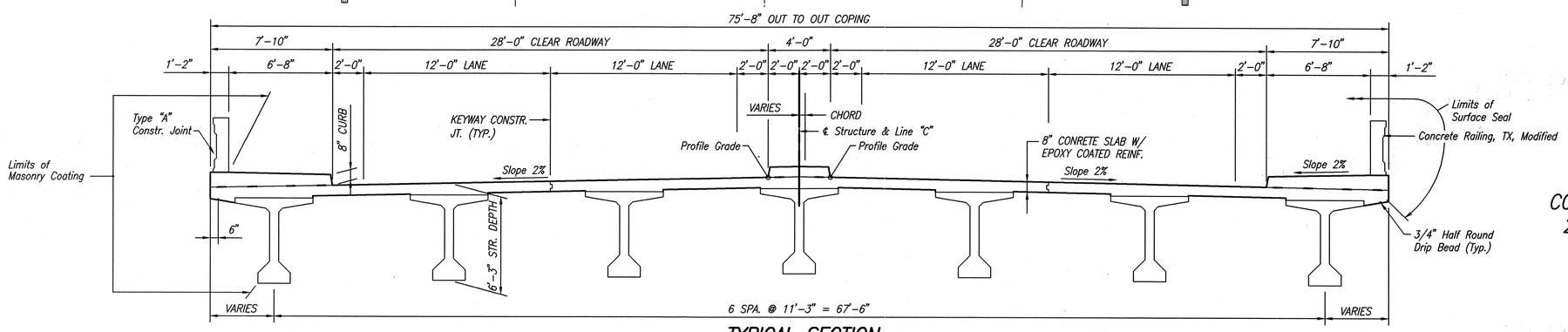

TYPICAL SECTION

Scale: 1/4" = 1'-0

GENERAL NOTES

Profile grade was established for Line "C" utilizing a structure depth of 6'-3" measured from top of slab to bottom of beam.

Reinforcing steel covering shall be 2 1/2" in top and 1" min. in bottom of floor slabs, 3" in footings except bottom steel which shall be 4", and 2" in all other parts, unless noted.

DESIGN DATA

Design for HS20-44 Loading accordance with 1996 AASHTO Specifications, and all subsequent interim specifications.

Design for Toll Road Loading in accordance with Indiana Department of Transportation Bridge Manual.

Design for actual dead load, 35#/sft. (composite) of future wearing surface.

ALLOWABLE DESIGN STRESSES

Class "A" Concrete f'c = 3,500 p.s.i.
Class "B" Concrete f'c = 3,000 p.s.i.
Class "C" Concrete f'c = 4,000 p.s.i.
Reinforcing Steel, Grade 60, Fy = 60,000 p.s.i.

CURVE DATA

P.I. STA. 26+57.68 "C"
D = 1°29'18"
Δ = 16°44'59"
R = 3850.00'
T = 566.79'
L = 1125.50'
E = 41.49'

CONTINUOUS COMPOSITE BEAM BRIDGE
2 SPANS @ 109'-9, SKEW: VARIES
2-28'-0 CLEAR ROADWAYS
CHASE STREET OVER I-80/94

REVISIONS	
DATE	REVISION
02-27-03	CHANGED MIN. LOW STR. ELEV
4-3-03	REVISED CURVE DATA
11/07/03	AS BUILT

RICHARD T. O'CONNOR REGISTERED No. 17778 STATE OF INDIANA PROFESSIONAL ENGINEER

RECOMMENDED FOR APPROVAL Richard T. O'Connor
DESIGN ENGINEER DATE

DESIGNED: SCJ DRAWN: SCJ
CHECKED: DOC CHECKED: DOC

INDIANA DEPARTMENT OF TRANSPORTATION

GENERAL PLAN
CHASE STREET OVER I-80/I-94

HORIZONTAL SCALE	BRIDGE FILE
AS NOTED	I-80-8-5467
VERTICAL SCALE	DESIGNATION
	9709110
SURVEY BOOK	SHEET
	14 of 57
CONTRACT	PROJECT
B-26411	IM-80-1(163)

Time: 14:0:25
Date: 1/27/2003
Scale: 1=1(PS)
Drawing File: 603020-1\CHASE\CHASE-14.dwg DWG (dduncan)

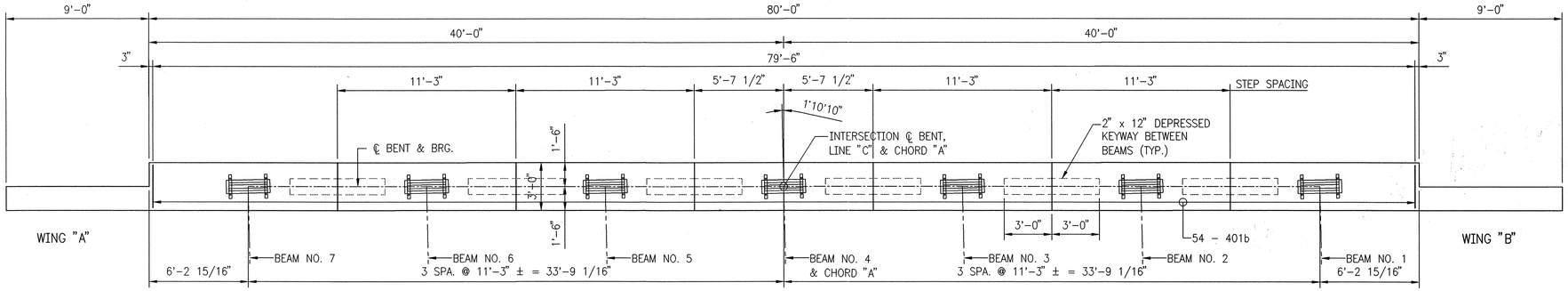

CAP PLAN

SCALE: 1/4" = 1'-0"

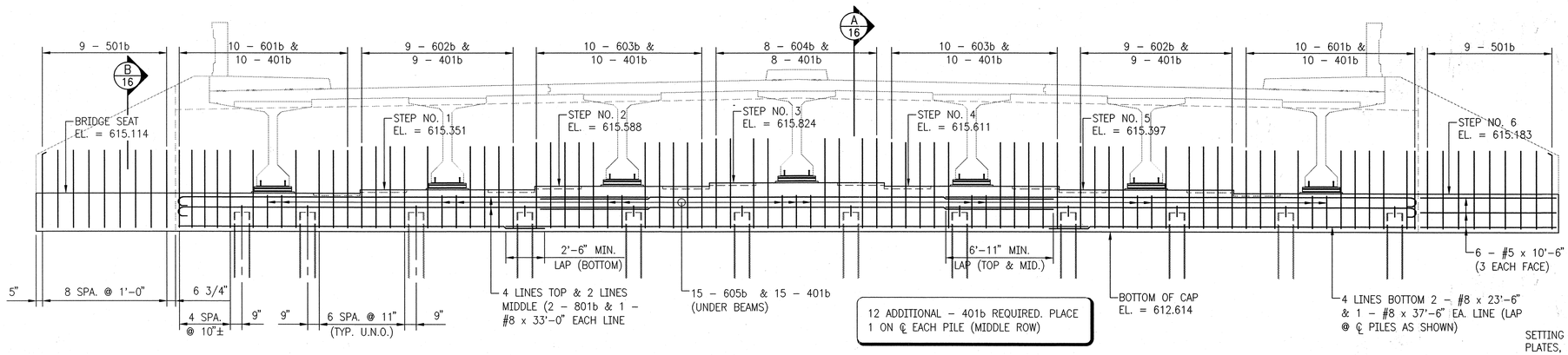

ELEVATION

SCALE: 1/4" = 1'-0"

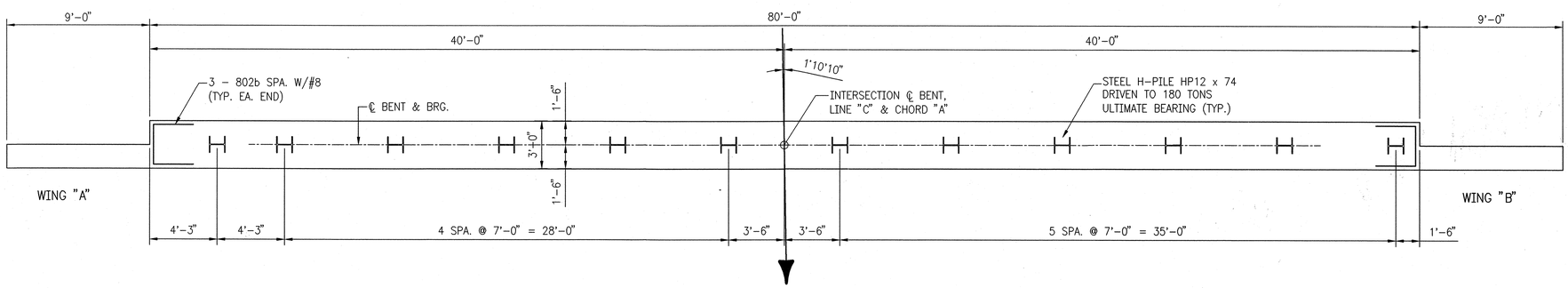

PILING PLAN

SCALE: 1/4" = 1'-0"

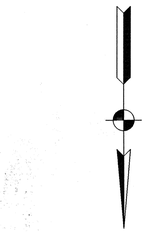

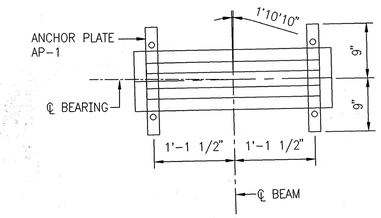

ANCHOR PLATE LOCATION DETAIL

SCALE: 1/4" = 1'-0"

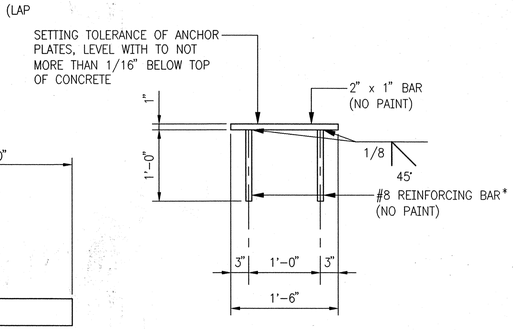

ANCHOR PLATE - AP1

* 7/8" ø x 0'-8" AUTOMATICALLY WELDED ANCHOR STUDS (HEADED) MAY BE USED IN LIEU OF #8 REINFORCING BARS.

REVISIONS	
DATE	REVISION
4-3-03	REVISED PILE SPACING (INTERFERENCE W/EXISTING
	BATTERED PILE.
11/07/03	AS BUILT

RICHARD T. O'CONNOR REGISTERED No. 17778 STATE OF INDIANA PROFESSIONAL ENGINEER

RECOMMENDED FOR APPROVAL Richard T. O'Connor
DESIGN ENGINEER DATE

DESIGNED: SCJ DRAWN: SCJ
CHECKED: DOC CHECKED: DOC

INDIANA DEPARTMENT OF TRANSPORTATION

BENT NO. 1 DETAILS
CHASE STREET OVER I-80/I-94

HORIZONTAL SCALE	BRIDGE FILE
AS NOTED	I-80-8-5467
VERTICAL SCALE	DESIGNATION
	9709110
SURVEY BOOK	SHEET
	15 of 57
CONTRACT	PROJECT
B-26411	IM-80-1(163)

Time: 10:13
Date: 1/27/2003
Scale: 1:1 Model
Drawing File: R:\0200-1\CHASE\CHASE-15.dwg DWG (dduncan)

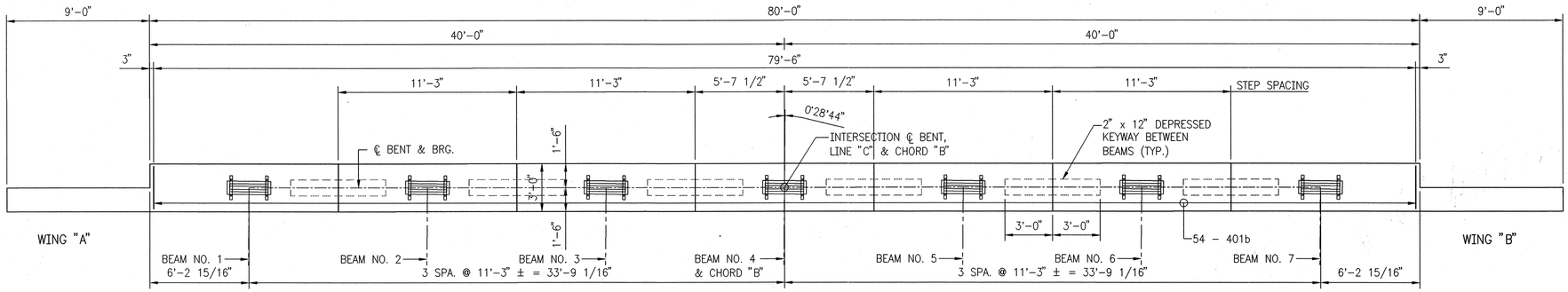

CAP PLAN

SCALE: 1/4" = 1'-0"

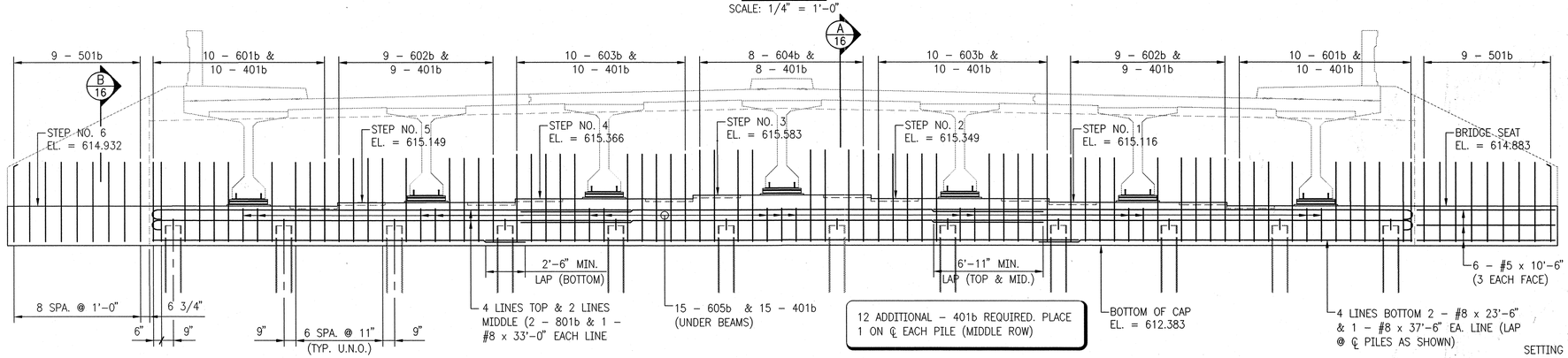

ELEVATION

SCALE: 1/4" = 1'-0"

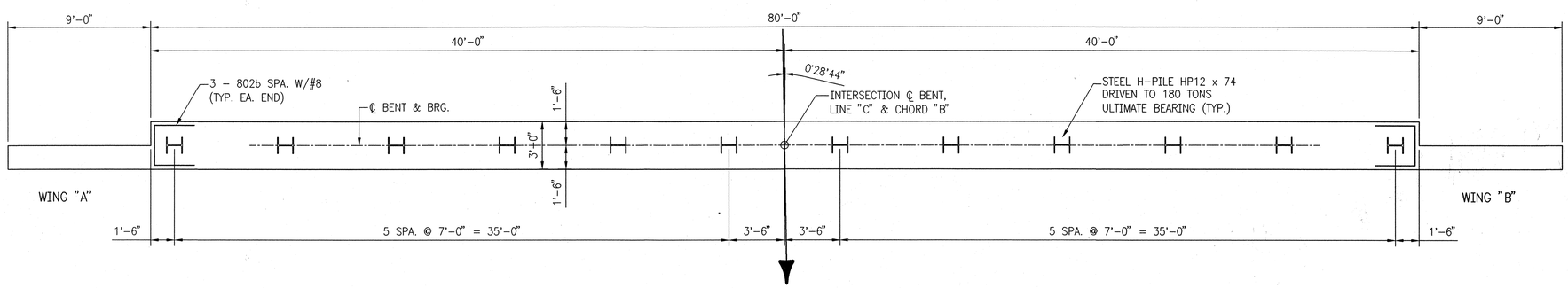

PILING PLAN

SCALE: 1/4" = 1'-0"

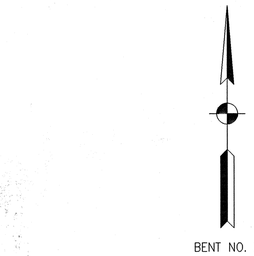

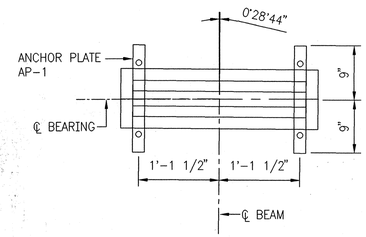

ANCHOR PLATE LOCATION DETAIL

SCALE: 1/4" = 1'-0"

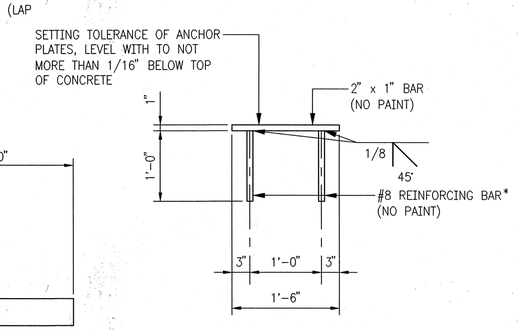

ANCHOR PLATE - AP1

* 7/8" ø x 0'-8" AUTOMATICALLY WELDED ANCHOR STUDS (HEADED) MAY BE USED IN LIEU OF #8 REINFORCING BARS.

Time: 10:13:6
Date: 1/27/2003
Scale: 1=40(PS)
Drawing File: 903020-1\CHASE\CHASE-15a.dwg DWG (ddincon)

RICHARD T. O'CONNOR REGISTERED No. 17778 STATE OF INDIANA PROFESSIONAL ENGINEER

RECOMMENDED FOR APPROVAL Richard T. O'Connor
DESIGN ENGINEER DATE

DESIGNED: SCJ DRAWN: SCJ
CHECKED: DOC CHECKED: DOC

INDIANA DEPARTMENT OF TRANSPORTATION

BENT NO. 3 DETAILS
CHASE STREET OVER I-80/I-94

HORIZONTAL SCALE	BRIDGE FILE
AS NOTED	I-80-8-5467
VERTICAL SCALE	DESIGNATION
	9709110
SURVEY BOOK	SHEET
	15a of 57
CONTRACT	PROJECT
B-26411	IM-80-1(163)

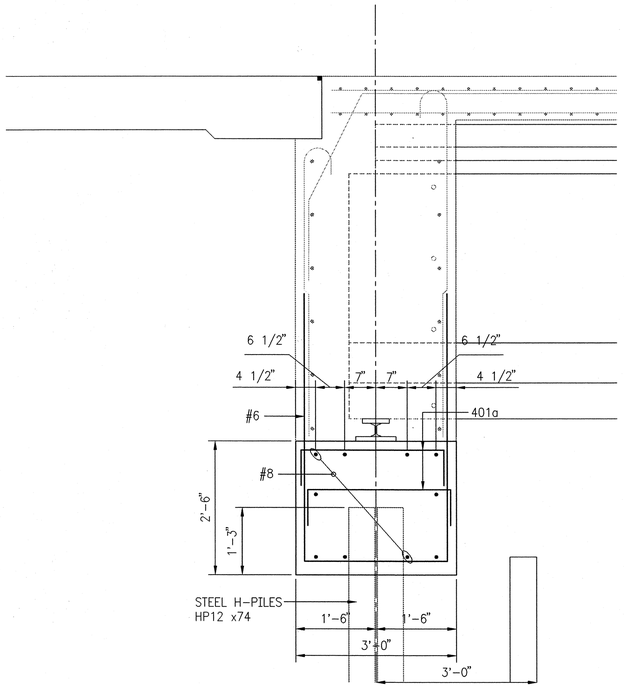

SECTION (A / 16)
SCALE: 3/4" = 1'-0"

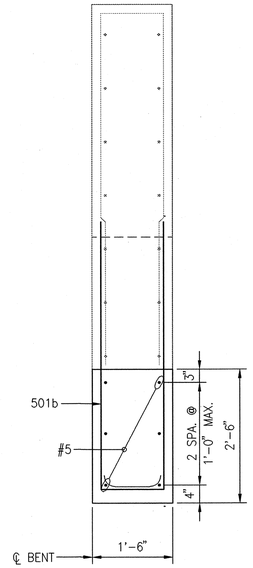

SECTION (B / 16)
SCALE: 3/4" = 1'-0"

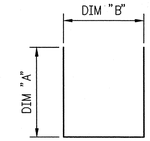

MARK	"A"	"B"	LENGTH
802b	2'-6"	2'-6"	7'-6"
601b	5'-0"	2'-8"	12'-8"
602b	5'-3"	2'-8"	13'-2"
603b	5'-6"	2'-8"	13'-8"
604b	5'-9"	2'-8"	14'-2"
501b	5'-0"	1'-2"	11'-2"
401b	8"	2'-8"	4'-0"

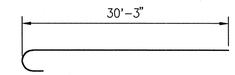

801b x 31'-2"

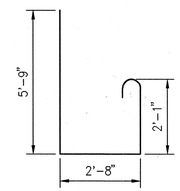

605b x 11'-2"

BILL OF MATERIALS BENT NO. 3

REINFORCING STEEL EPOXY COATED			
SIZE & MARK	NO. OF BARS	LENGTH	WEIGHT LBS.
801b	12	31'-2"	
802b	6	7'-6"	
#8	4	37'-6"	
#8	6	33'-0"	
#8	8	23'-6"	
TOTAL #8			2550
601b	20	12'-8"	
602b	18	13'-2"	
603b	20	13'-8"	
604b	8	14'-2"	
605b	15	11'-2"	
TOTAL #6			1569
501b	18	11'-2"	
#5	12	10'-6"	
TOTAL #5			341
401b	147	4'-0"	
TOTAL #4			393
TOTAL REINFORCING			4853
CONCRETE			CYS
CLASS "C" IN SUPERSTRUCTURE			
POUR NO. 1			27.3
MISCELLANEOUS			(QTY.)
SURFACE SEAL (ESTIMATED)			42.5 SFT.
PILE, HP12 x 74			
12 @ APPROX.130 LFT. EA.			1560 LFT.

BILL OF MATERIALS BENT NO. 1

REINFORCING STEEL EPOXY COATED			
SIZE & MARK	NO. OF BARS	LENGTH	WEIGHT LBS.
801b	12	31'-2"	
802b	6	7'-6"	
#8	4	37'-6"	
#8	6	33'-0"	
#8	8	23'-6"	
TOTAL #8			2550
601b	20	12'-8"	
602b	18	13'-2"	
603b	20	13'-8"	
604b	8	14'-2"	
605b	15	11'-2"	
TOTAL #6			1569
501b	18	11'-2"	
#5	12	10'-6"	
TOTAL #5			341
401b	147	4'-0"	
TOTAL #4			393
TOTAL REINFORCING			4853
CONCRETE			CYS
CLASS "C" IN SUPERSTRUCTURE			
POUR NO. 1			27.3
MISCELLANEOUS			(QTY.)
SURFACE SEAL (ESTIMATED)			42.5 SFT.
PILE, HP12 x 74			
12 @ APPROX.130 LFT. EA.			1560 LFT.

REVISIONS	
DATE	REVISION
11/07/03	AS BUILT

RICHARD T. O'CONNOR REGISTERED No. 17778 STATE OF INDIANA PROFESSIONAL ENGINEER

RECOMMENDED FOR APPROVAL Richard T. O'Connor
DESIGN ENGINEER DATE

DESIGNED: SCJ DRAWN: DRD
CHECKED: DOC CHECKED: SCJ

INDIANA DEPARTMENT OF TRANSPORTATION

BENTS 1 & 3 DETAILS AND BILL OF MATERIALS
CHASE STREET OVER I-80/I-94

HORIZONTAL SCALE	BRIDGE FILE
AS NOTED	I-80-8-5467
VERTICAL SCALE	DESIGNATION
	9709110
SURVEY BOOK	SHEET
	16 of 57
CONTRACT	PROJECT
B-26411	IM-80-1(163)

Time: 10:15:3
Date: 1/27/2003
Scale: 1=1(PS)
Drawing File: 6030120-1\CHASE\CHASE-16.dwg.DWG (dduncan)

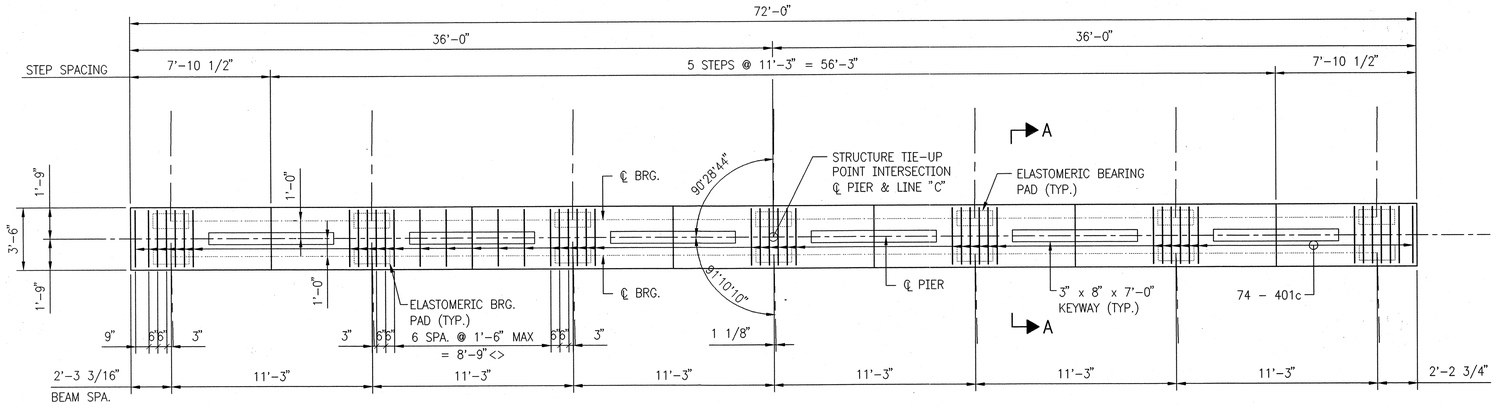

CAP PLAN
SCALE: 1/4" = 1'-0"

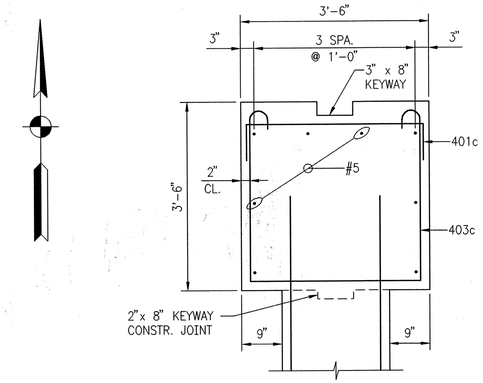

SECTION A-A
SCALE: 3/4" = 1'-0"

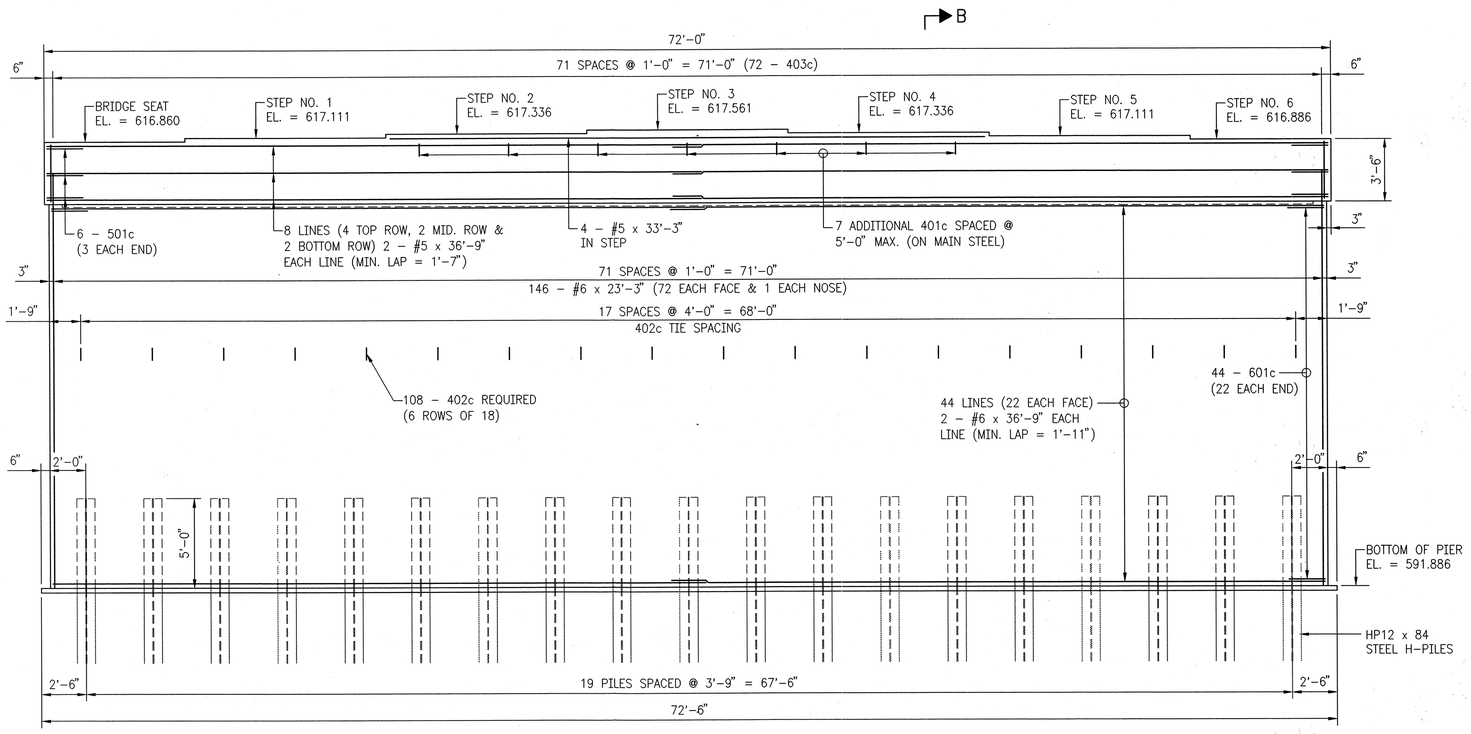

ELEVATION
SCALE: 1/4" = 1'-0"

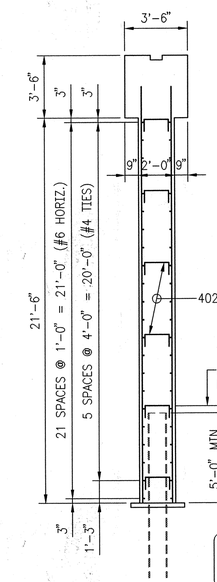

SURFACE SEAL AND MASONRY COAT ALL EXPOSED SURFACES THE PIER STEM AND CAP.

SECTION B-B
SCALE: 1/4" = 1'-0"

REVISIONS	
DATE	REVISION
11/07/03	AS BUILT

RICHARD T. O'CONNOR REGISTERED No. 17778 STATE OF INDIANA PROFESSIONAL ENGINEER

RECOMMENDED FOR APPROVAL Richard T. O'Connor
DESIGN ENGINEER DATE

DESIGNED: SCJ DRAWN: DRD
CHECKED: CHECKED: SCJ

INDIANA
DEPARTMENT OF TRANSPORTATION

PIER NO. 2 DETAILS
CHASE STREET OVER I-80/I-94

HORIZONTAL SCALE	BRIDGE FILE
AS NOTED	I-80-8-5467
VERTICAL SCALE	DESIGNATION
	9709110
SURVEY BOOK	SHEET
	17 of 57
CONTRACT	PROJECT
B-26411	IM-80-1(163)

Time: 10:22:51
Date: 1/27/2003
Scale: 1=4(PS)
Drawing File: 603020-1\CHASE\CHASE-17.dwg DWG (dduncan)

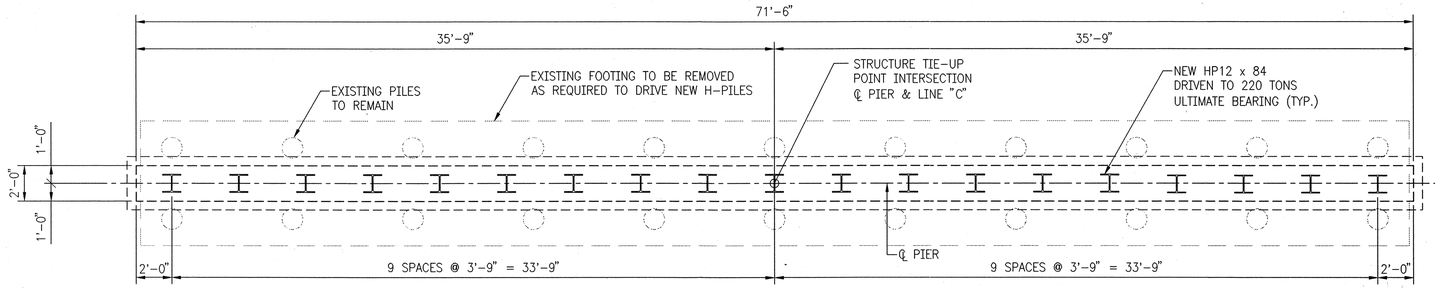

PILE PLAN

SCALE: 1/4" = 1'-0"

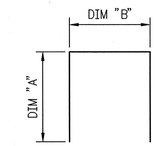

MARK	"A"	"B"	LENGTH
601c	2'-0"	1-6"	5'-6"
501c	2'-0"	3'-1"	7'-1"
401c	8"	3'-2"	4'-6"
402c	8"	1'-8"	3'-0"

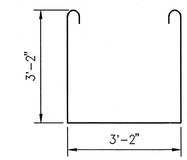

403c x 10'-6"

BILL OF MATERIALS
PIER NO. 2

REINFORCING STEEL			
SIZE & MARK	NO. OF BARS	LENGTH	WEIGHT LBS.
601c	44	5'-6"	
#6	88	36'-9"	
#6	146	23'-3"	
TOTAL #6			10,319
501c	6	7'-1"	
#5	16	36'-9"	
#5	4	33'-3"	
TOTAL #5			796
401c	81	4'-6"	
402c	108	3'-0"	
403c	72	10'-6"	
TOTAL #4			965
TOTAL REINFORCING			12,081

CONCRETE	CYS
CLASS "A" IN SUBSTRUCTURE	
CAP	35.3
STEM	114.9
TOTAL "A" IN SUBSTRUCTURE	150.2

MISCELLANEOUS	(QTY.)
SURFACE SEAL (ESTIMATED)	3,025 SFT.
MASONRY COATING (ESTIMATED)	3,025 SFT.
PILE, HP12 x 84	
19 @ APPROX.120 LFT. EA.	2,280 LFT.

REVISIONS	
DATE	REVISION
11/07/03	AS BUILT

RICHARD T. O'CONNOR REGISTERED No. 17778 STATE OF INDIANA PROFESSIONAL ENGINEER

RECOMMENDED FOR APPROVAL Richard T. O'Connor
DESIGN ENGINEER DATE

DESIGNED: SCJ DRAWN: DRD
CHECKED: CHECKED: SCJ

INDIANA DEPARTMENT OF TRANSPORTATION

PIER NO. 2 DETAILS & BILL OF MATERIALS
CHASE STREET OVER I-80/I-94

HORIZONTAL SCALE	BRIDGE FILE
AS NOTED	I-80-8-5467
VERTICAL SCALE	DESIGNATION
	9709110
SURVEY BOOK	SHEET
	18 of 57
CONTRACT	PROJECT
B-26411	IM-80-1(163)

Time: 10:20:17
Date: 1/27/2003
Scale: 1=4(PS)
Drawing File: 603020-1\CHASE\CHASE-18.dwg.DWG (dduncan)

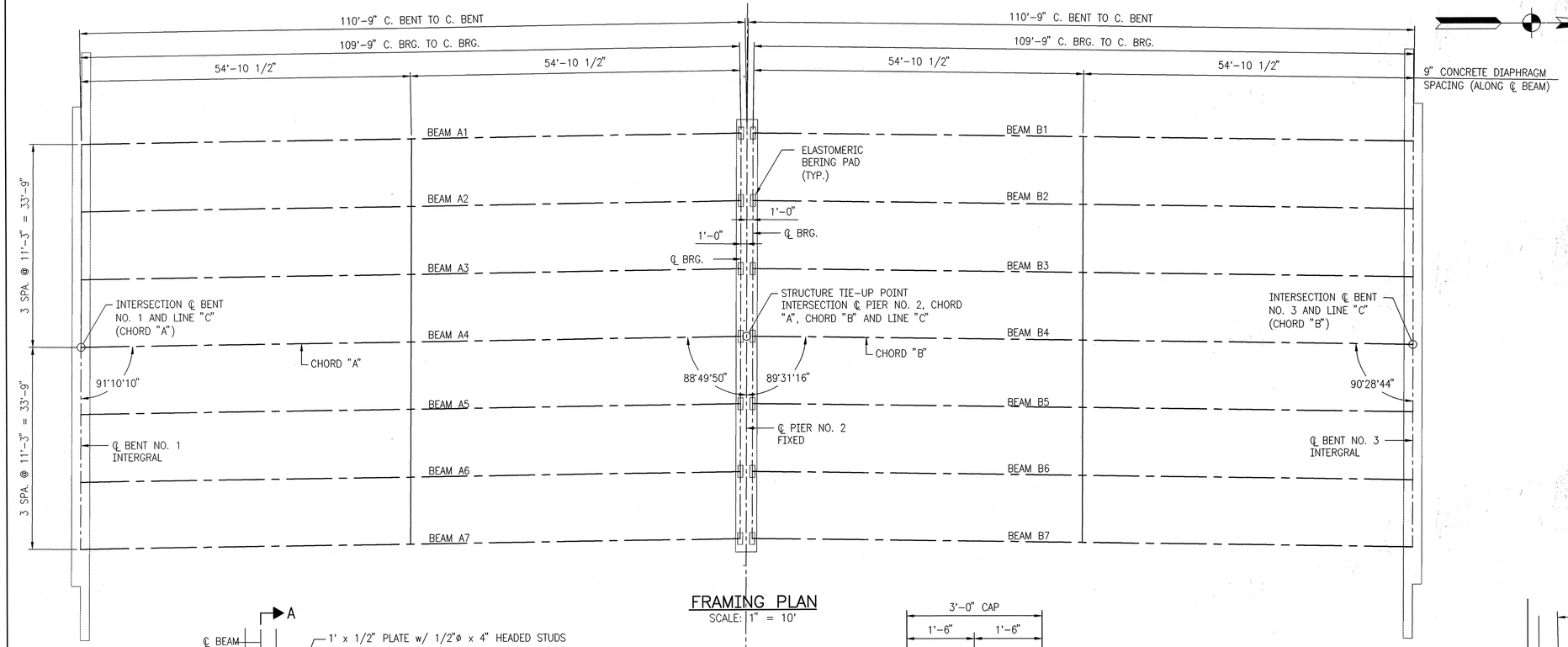

FRAMING PLAN

SCALE: 1" = 10'

NOTES:

THE BEAM MANUFACTURER SHALL FURNISH TO THE ENGINEER, **THROUGH THE CONTRACTOR** 5 SETS OF SHOP DRAWINGS, FOR APPROVAL, PRIOR TO THE CASTING OF THE GIRDERS.

ALL MATERIALS SHALL BE IN ACCORDANCE WITH THE INDIANA DEPARTMENT OF TRANSPORTATION STANDARD SPECIFICATIONS.

MINIMUM COMPRESSIVE STRENGTH OF CONCRETE AT TIME OF PRESTRESSING SHALL BE 6500 P.S.I.

MINIMUM COMPRESSIVE STRENGTH OF CONCRETE AT 28 DAYS SHALL BE 8000 P.S.I.

PRESTRESSING STEEL SHALL BE 1/2 INCH DIAMETER, 7 WIRE, SPECIAL LOW-RELAXATION STRANDS (AREA = 0.167 SQUARE INCHES) WITH A MINIMUM TENSILE STRENGTH OF 270,000 P.S.I. INITIAL TENSION PER STRAND TO BE 33,815 POUNDS.

REINFORCING STEEL SHALL BE ASTM A615, GRADE 60. REINFORCING STEEL EXTENDING INTO SLAB SHALL BE EPOXY COATED.

SEE GENERAL PLAN, DESIGN DATA, FOR ADDITIONAL INFORMATION.

BEAMS SHALL BE CAST A MINIMUM OF 15 DAYS BEFORE THE FLOOR SLAB IS POURED.

SURFACE SEAL REQUIRED ON THE TOP OF ALL BEAMS AND THE EXTERIOR FACE OF THE EXTERIOR BEAMS, AND SHALL BE APPLIED BY THE BEAM MANUFACTURER IN THE SHOP. DO NOT RUB.

BEAMS SHALL BE HANDLED AND ERECTED IN ACCORDANCE WITH THE BEAM MANUFACTURERS RECOMMENDATIONS. SEVERAL LIFTING DEVICES ARE SATISFACTORY. THE TYPE USED MUST BE GUARANTEED BY THE BEAM MANUFACTURER, AND APPROVED BY THE ENGINEER ON THE SHOP DRAWINGS.

BEAMS ARE TO BE LIFTED AT THE BEARING POINTS ONLY. BEAMS ARE TO BE SUPPORTED AT BEARING POINTS WHILE STORED AND TRANSPORTED TO JOB SITE, AND SHALL BE MAINTAINED VERTICALLY AT ALL TIMES TO RESIST LATERAL LOADS.

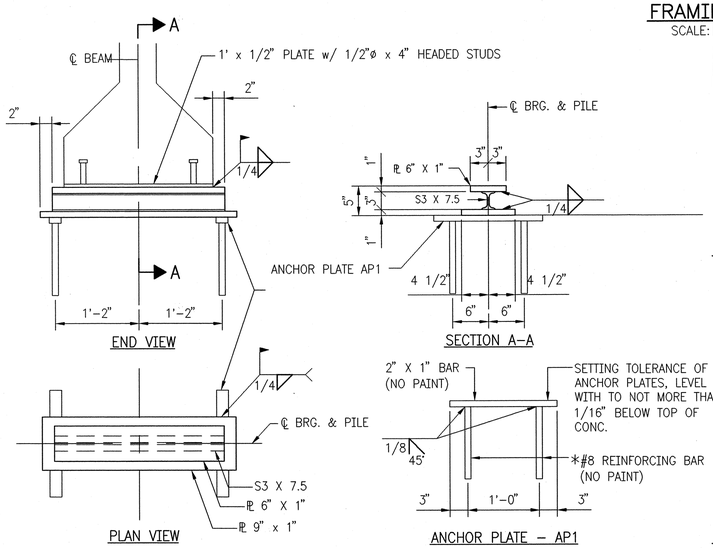

BEARING ASSEMBLY FOR ERECTION

SCALE: 3/4" = 1'-0"

*7/8ø x 8" AUTOMATICALLY WELDED ANCHOR STUDS (HEADED) MAY BE USED IN LIEU OF #8 REINFORCING STEEL

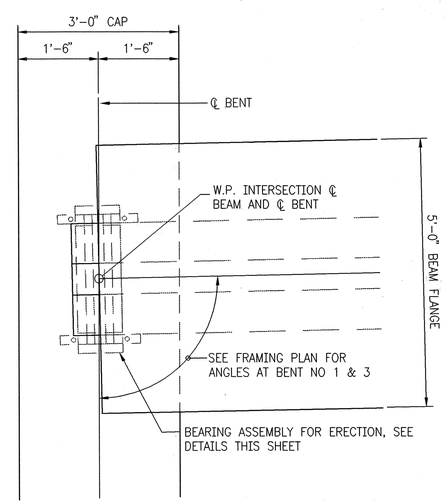

BEARING DETAIL AT BENT NO. 1
BENT NO. 3 SIMILAR

SCALE: 3/4" = 1'-0"

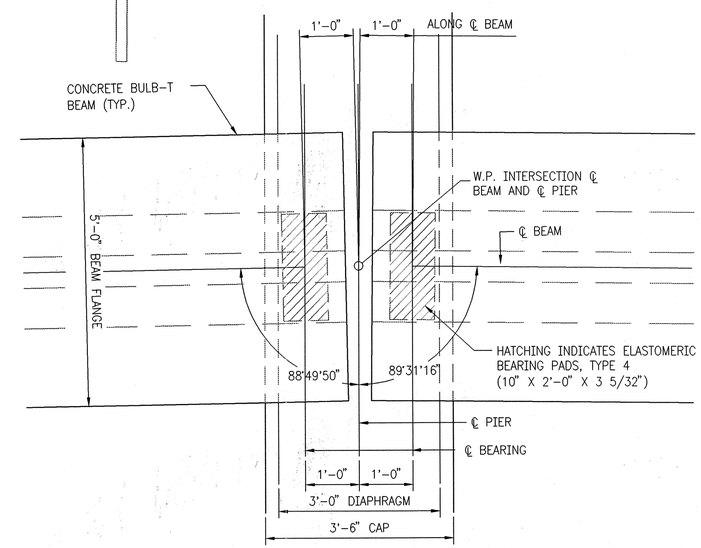

BEARING DETAIL AT BENT NO. 2

SCALE: 3/4" = 1'-0"

REVISIONS	
DATE	REVISION
11/07/03	AS BUILT

RICHARD T. O'CONNOR REGISTERED No. 17778 STATE OF INDIANA PROFESSIONAL ENGINEER

RECOMMENDED FOR APPROVAL Richard T. O'Connor — DESIGN ENGINEER — DATE

DESIGNED: SCJ — DRAWN: SCJ

CHECKED: DOC — CHECKED: DOC

INDIANA DEPARTMENT OF TRANSPORTATION

FRAMING PLAN AND DETAILS
CHASE STREET OVER I-80/I-94

HORIZONTAL SCALE	BRIDGE FILE
AS NOTED	I-80-8-5467
VERTICAL SCALE	DESIGNATION
	9709110
SURVEY BOOK	SHEET
	19 of 57
CONTRACT	PROJECT
B-26411	IM-80-1(163)

Time: 10:43:31
Date: 1/27/2003
Scale: 1=10(F3)
Drawing File: 03020-1\CHASE\CHASE-19.dwg DWG (dduncan)

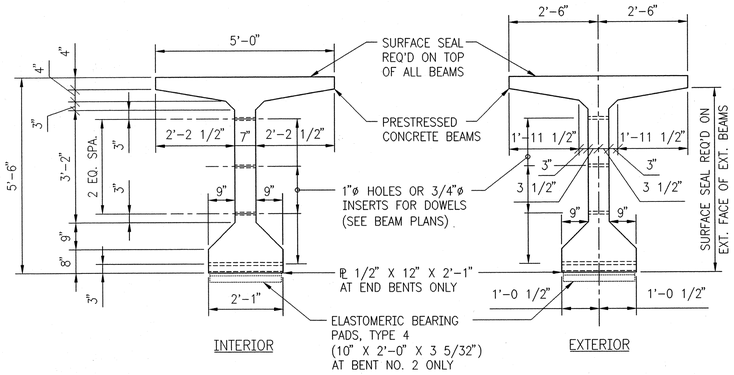

BEAM SECTIONS SHOWING DIMENSION

SCALE: 1/2" = 1'-0"

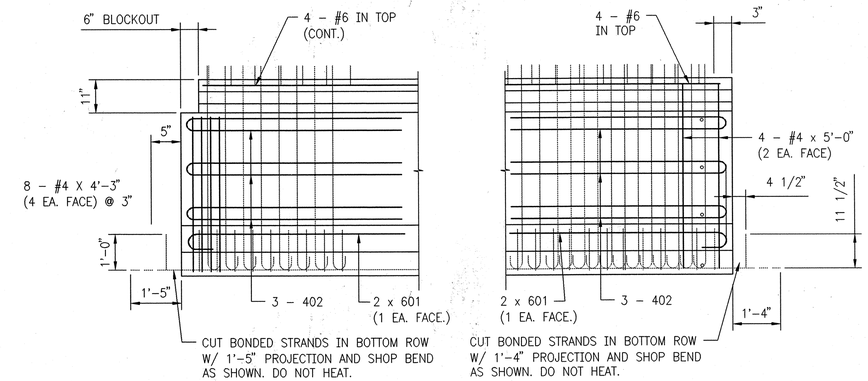

BENT NO. 1 (SHOWN)
BENT NO. 3 (OPP HAND)

BENT NO. 2 (SHOWN)

BEAM ELEVATION SHOWING ADDITIONAL END REINFORCING

SCALE: NOT TO SCALE

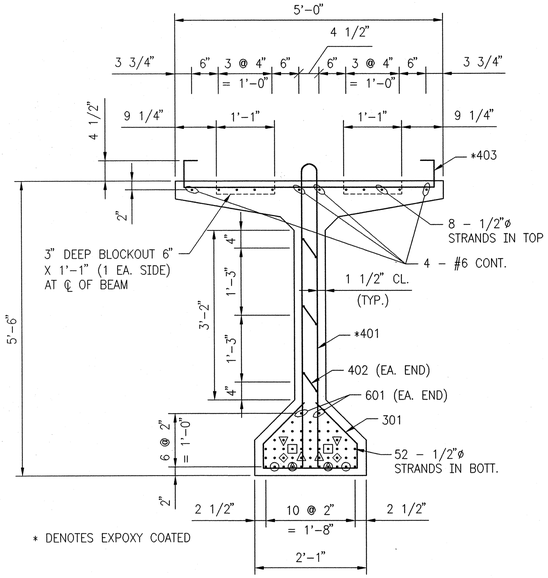

BEAM SECTION SHOWING REINFORCING

SCALE: 3/4" = 1'-0"

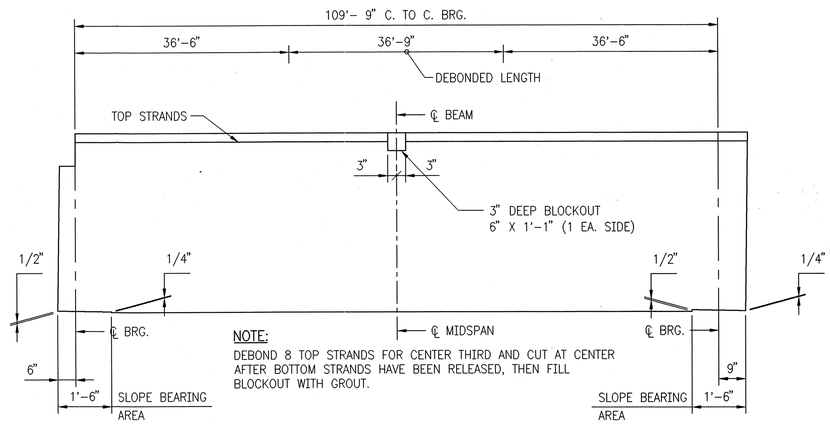

NOTE:
DEBOND 8 TOP STRANDS FOR CENTER THIRD AND CUT AT CENTER AFTER BOTTOM STRANDS HAVE BEEN RELEASED, THEN FILL BLOCKOUT WITH GROUT.

TOP STRAND DEBONDING DETAIL

NOT TO SCALE

BOTTOM STRAND DEBONDING		
SPAN	STRAND SYMBOL	DEBONDED LENGTH FROM EACH END OF BEAM
"A" OR "B"	⊙	4'-0"
	⊡	8'-0"
	◬	12'-0"
	◉	20'-0"
	◇	24'-0"
	▽	10'-0"

DEFLECTIONS AT MIDSPAN			
SPAN	CAMBER AS ERECTED	DEAD LOAD DEFLECTION	RESIDUAL CAMBER
"A" OR "B"	+3.89"	-1.44"	+2.45"

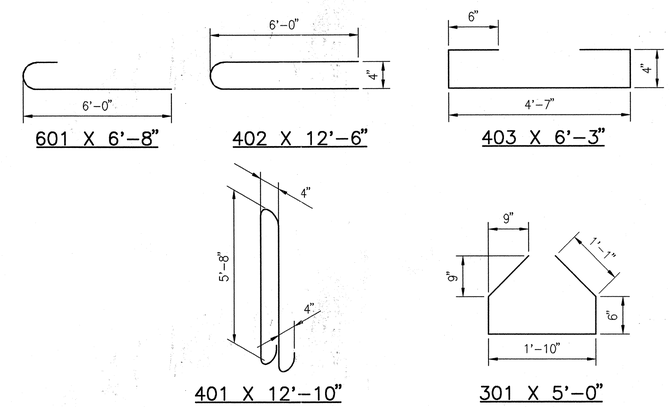

BAR BENDING DETAILS

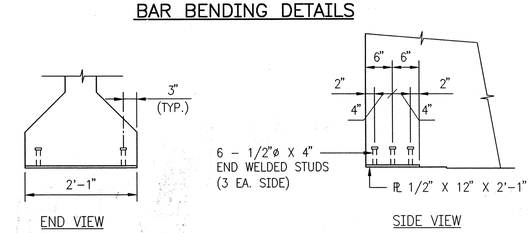

BEAM END DETAILS BENT NO. 1 OR BENT NO. 3

SCALE: 3/4" = 1'-0"

NOTES:
SEE SHEET 20 FOR BEAM ERECTION PLAN, BEARING DETAIL AND BEAM NOTES.
SEE SHEET 22 FOR ADDITIONAL BEAM DETAILS.

REVISIONS	
DATE	REVISION
11/07/03	AS BUILT

RICHARD T. O'CONNOR REGISTERED No. 17778 STATE OF INDIANA PROFESSIONAL ENGINEER

RECOMMENDED FOR APPROVAL Richard T. O'Connor
DESIGN ENGINEER DATE

DESIGNED: MT/SCJ DRAWN: MJF
CHECKED: DOC CHECKED: SCJ

INDIANA DEPARTMENT OF TRANSPORTATION

BEAM DETAILS
CHASE STREET OVER I-80/I-94

HORIZONTAL SCALE	BRIDGE FILE
AS NOTED	I-80-8-5467
VERTICAL SCALE	DESIGNATION
	9709110
SURVEY BOOK	SHEET
	20 of 57
CONTRACT	PROJECT
B-26411	IM-80-1(163)

Time: 10:45:59
Date: 11/7/2003
Scale: 1"=40(PS)
Drawing File: 603020-1\CHASE\CHASE-20.dwg DWG (dduncan)

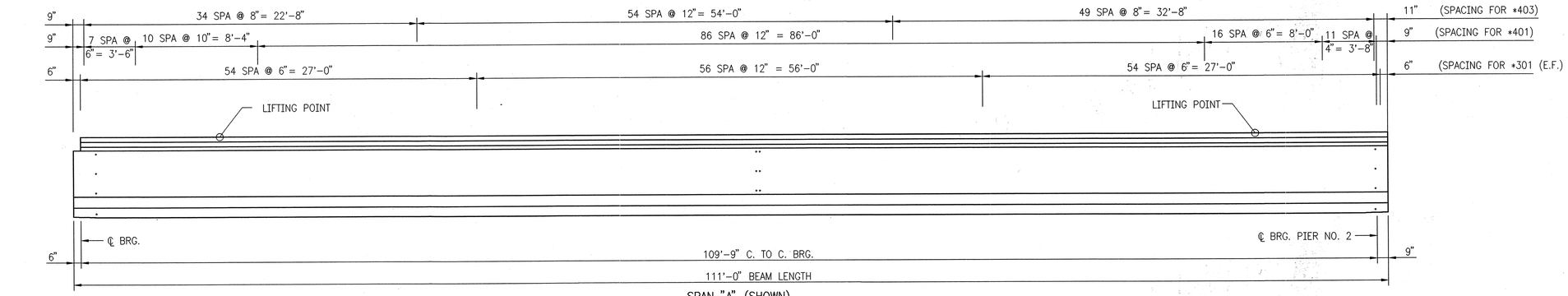

SPAN "A" (SHOWN)
SPAN "B" (OPP. HAND)

TYPICAL BEAM ELEVATION

SCALE: NOT TO SCALE

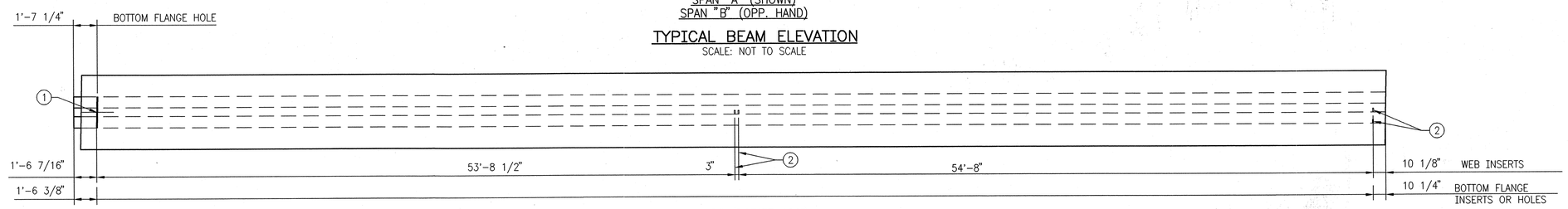

BEAM B7 (ROTATE 180°)
BEAM A1 (SHOWN)

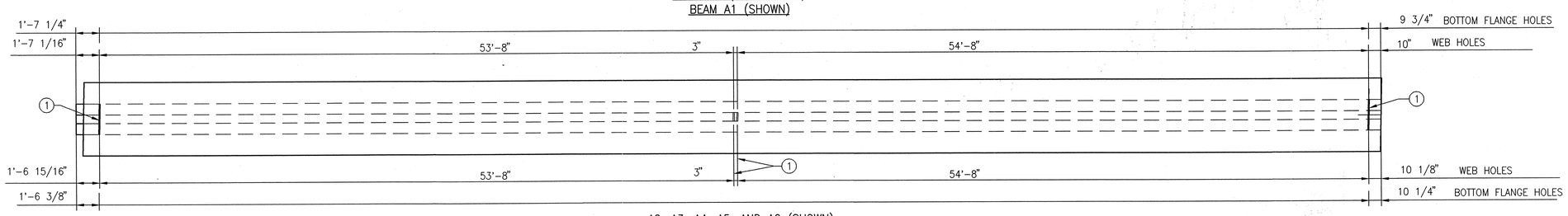

A2, A3, A4, A5, AND A6 (SHOWN)
B6, B5, B4, B3, AND B2 (ROTATE 18(

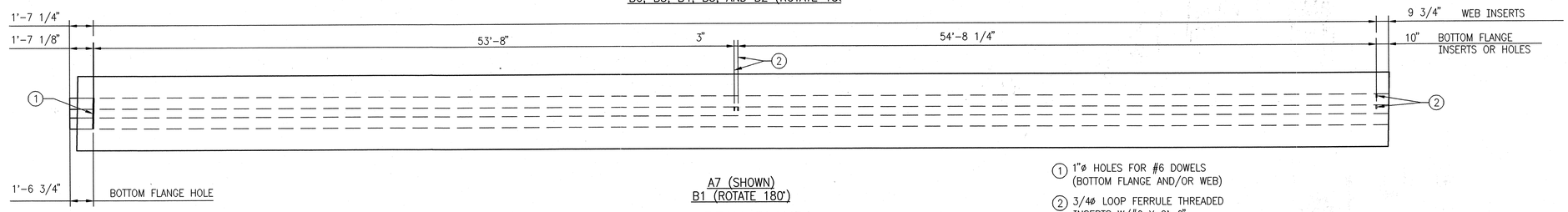

A7 (SHOWN)
B1 (ROTATE 180°)

BEAM PLANS

SCALE: NOT TO SCALE

(1) 1"ø HOLES FOR #6 DOWELS (BOTTOM FLANGE AND/OR WEB)

(2) 3/4ø LOOP FERRULE THREADED INSERTS W/#6 X 2'-6" THREADED DOWELS. (BOTTOM FLANGE AND/OR WEB)

* DENOTES EPOXY COATED

NOTES:

SEE SHEET 18 FOR BEAM ERECTION PLAN, BEARING DETAILS AND NOTES.
SEE SHEET 19 FOR ADDITIONAL BEAM DETAILS

REVISIONS	
DATE	REVISION
11/07/03	AS BUILT

RICHARD T. O'CONNOR REGISTERED No. 17778 STATE OF INDIANA PROFESSIONAL ENGINEER

RECOMMENDED FOR APPROVAL — DESIGN ENGINEER — DATE

DESIGNED: SCJ DRAWN: SCJ
CHECKED: DOC CHECKED: DOC

INDIANA DEPARTMENT OF TRANSPORTATION

BEAM ELEVATION AND PLANS
CHASE STREET OVER I-80/I-94

HORIZONTAL SCALE	BRIDGE FILE
AS NOTED	I-80-8-5467
VERTICAL SCALE	DESIGNATION
	9709110
SURVEY BOOK	SHEET
	21 of 57
CONTRACT	PROJECT
B-26411	IM-80-1(163)

Time: 10:45:54
Date: 11/7/2003
Scale: 1"=1'(PS)
Drawing File: 60X020-1\CHASE\CHASE-21.dwg.DWG (ddunccan)

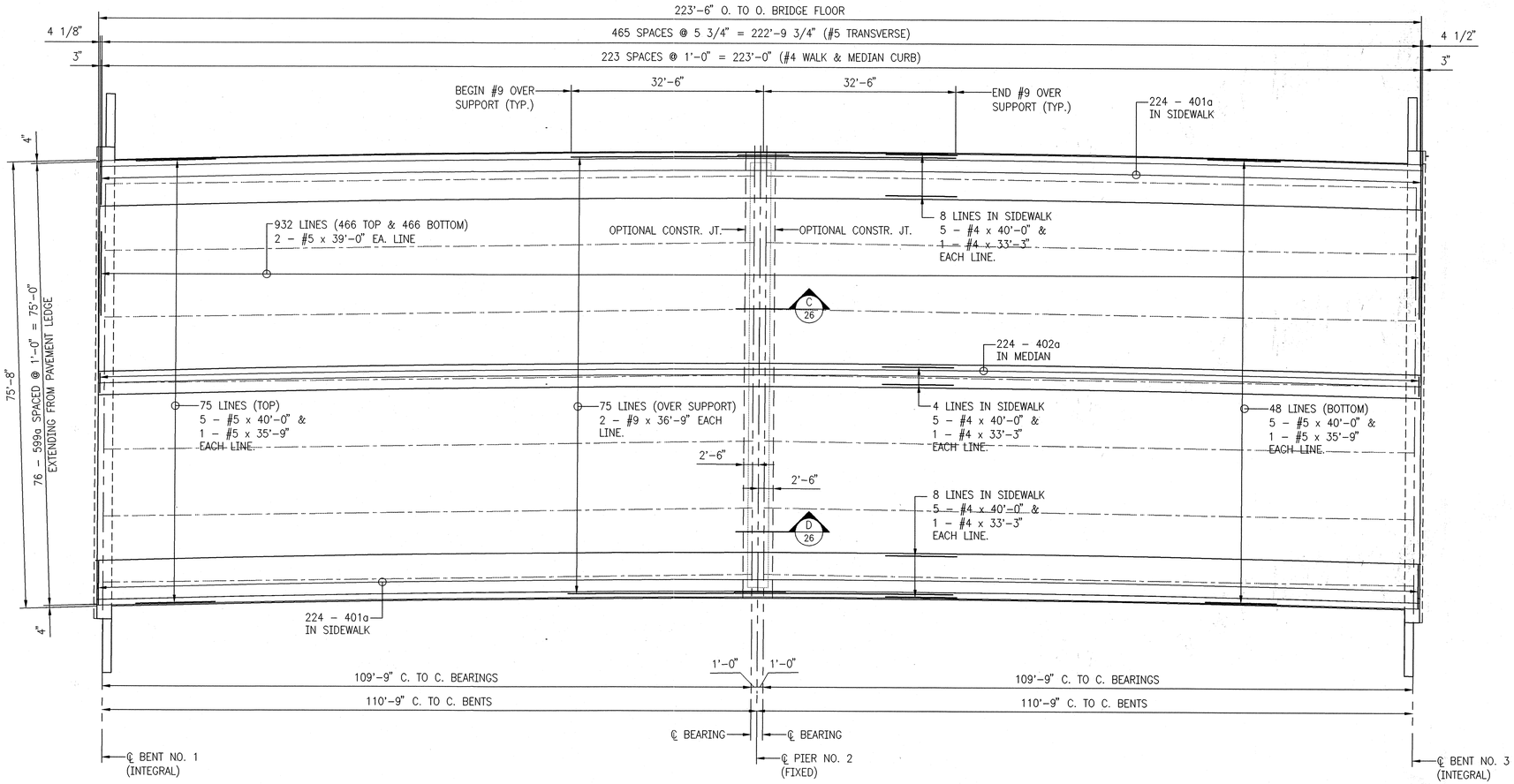

SLAB PLAN

SCALE: 3/32" = 1'-0"

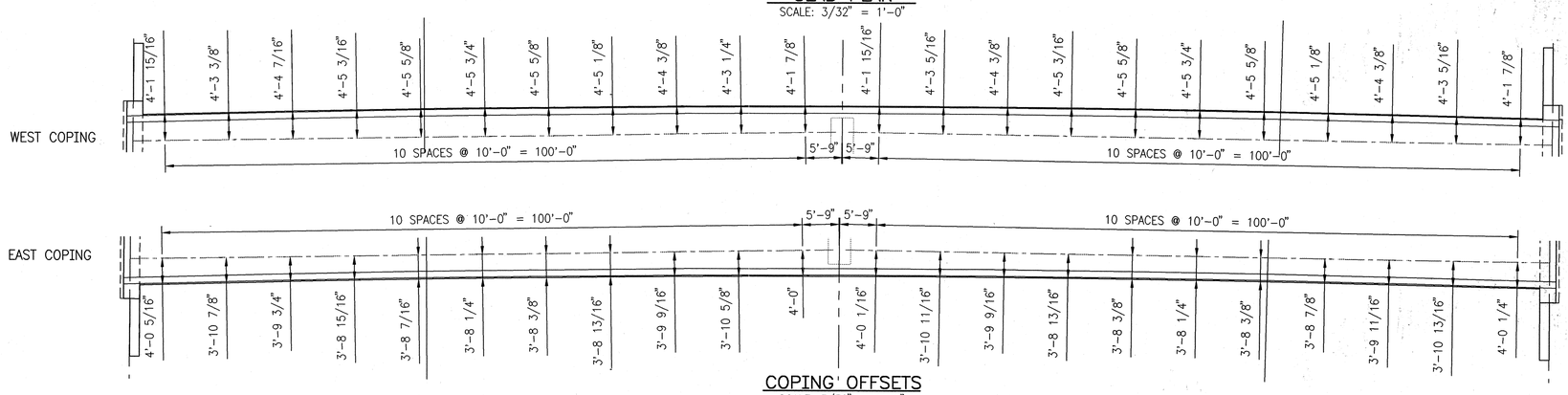

COPING OFFSETS

SCALE: 3/32" = 1'-0"

LAP CHART

BAR	LAP LENGTH
#4	2'-0"
#5	2'-6"
#6	3'-0"
#9	8'-1"

REVISIONS	
DATE	REVISION
11/07/03	AS BUILT

RICHARD T. O'CONNOR REGISTERED No. 17778 STATE OF INDIANA PROFESSIONAL ENGINEER

RECOMMENDED FOR APPROVAL Richard T. O'Connor DESIGN ENGINEER DATE

DESIGNED: SCJ DRAWN: DRD

CHECKED: DOC CHECKED: SCJ

INDIANA DEPARTMENT OF TRANSPORTATION

SLAB PLAN
CHASE STREET OVER I-80/I-94

HORIZONTAL SCALE	BRIDGE FILE
AS NOTED	I-80-8-5467
VERTICAL SCALE	DESIGNATION
	9709110
SURVEY BOOK	SHEET
	22 of 57
CONTRACT	PROJECT
B-26411	IM-80-1(163)

Time: 10:51:23
Date: 1/27/2003
Scale: 1=1(PS)
Drawing File: 603020-1\CHASE\CHASE-22.dwg.DWG (dduncan)

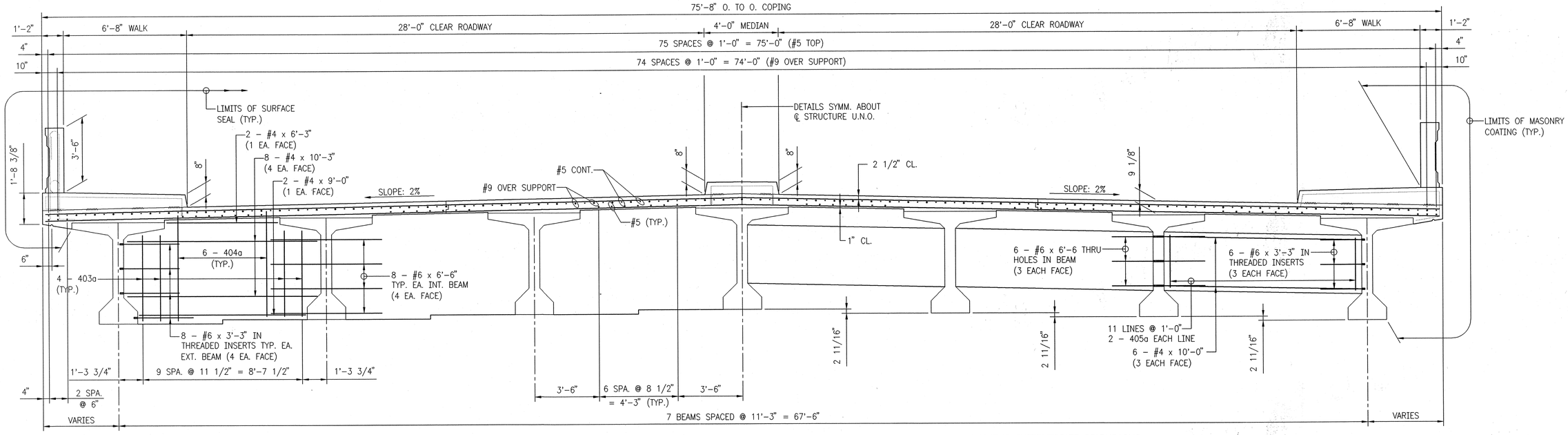

SHOWING DIAPHRAGM @ PIER NO. 2

SHOWING INTERMEDIATE DIAPHRAGMS

TYPICAL SECTION

SCALE: 3/8" = 1'-0"

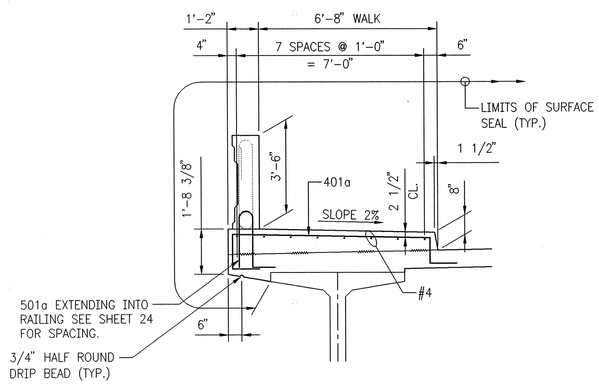

SIDEWALK DETAIL

SCALE: 3/8" = 1'-0"

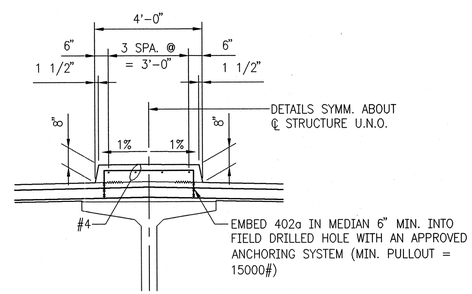

MEDIAN CURB DETAIL

SCALE: 3/8" = 1'-0"

REVISIONS	
DATE	REVISION
02-27-03	DELETED MASONRY COATING FROM MEDIAN CURB
11/07/03	AS BUILT

RICHARD T. O'CONNOR REGISTERED No. 17778 STATE OF INDIANA PROFESSIONAL ENGINEER

RECOMMENDED FOR APPROVAL Richard T. O'Connor DESIGN ENGINEER DATE

DESIGNED: SCJ DRAWN: DRD

CHECKED: DOC CHECKED: SCJ

INDIANA DEPARTMENT OF TRANSPORTATION

SLAB DETAILS
CHASE STREET OVER I-80/I-94

HORIZONTAL SCALE	BRIDGE FILE
AS NOTED	I-80-8-5467
VERTICAL SCALE	DESIGNATION
	9709110
SURVEY BOOK	SHEET
	23 of 57
CONTRACT	PROJECT
B-26411	IM-80-1(163)

Time: 10:53:10
Date: 1/27/2003
Scale: 1:1 (PS)
Drawing File: 603020-1\CHASE\CHASE-23.dwg DWG (ddunca)

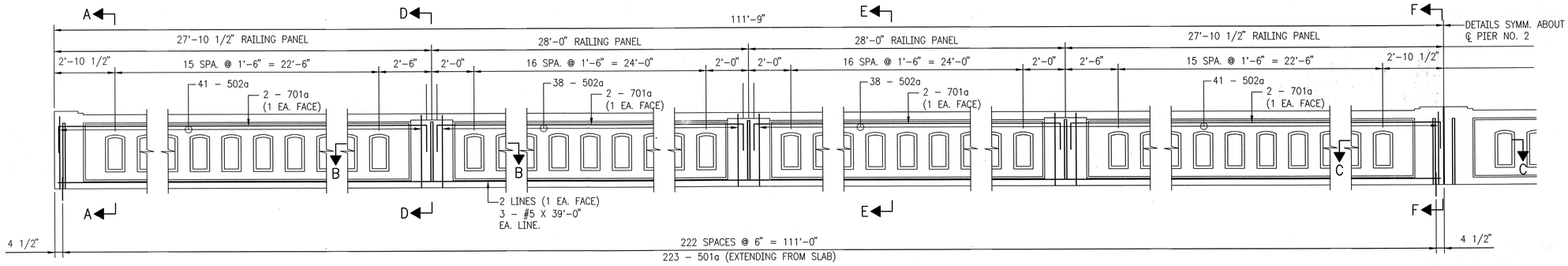

HALF RAILING ELEVATION
SCALE: 3/8" = 1'-0"

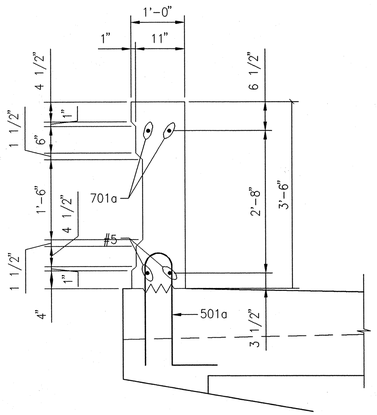

SECTION A-A
SCALE: 3/4" = 1'-0"

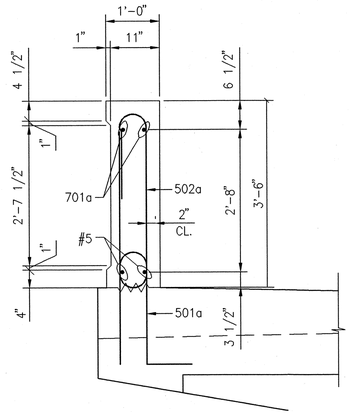

SECTION E-E
SCALE: 3/4" = 1'-0"

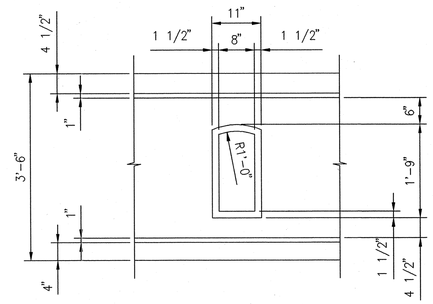

WINDOW DETAIL
SCALE: 3/4" = 1'-0"

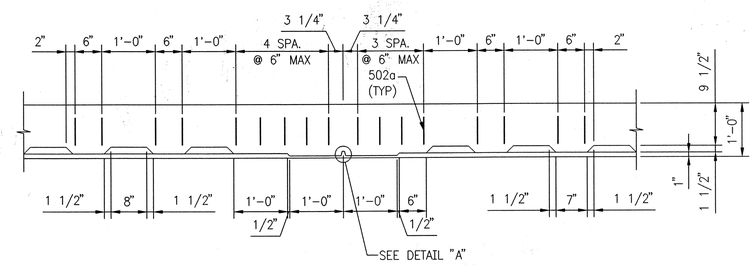

SECTION B-B
SCALE: 3/4" = 1'-0"

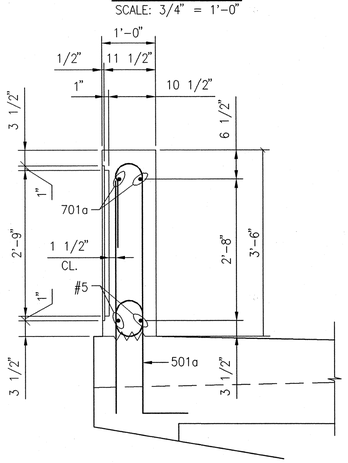

SECTION D-D
SCALE: 3/4" = 1'-0"

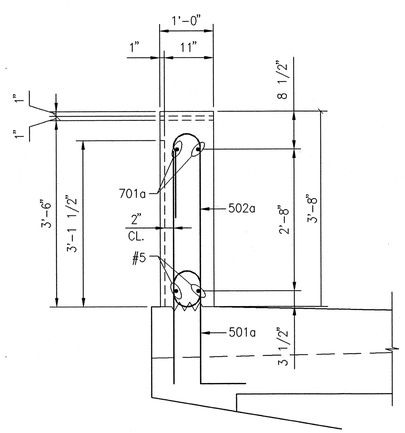

SECTION F-F
SCALE: 3/4" = 1'-0"

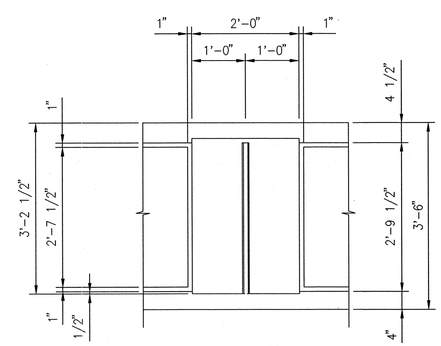

SPAN PILASTER DETAIL
SCALE: 3/4" = 1'-0"

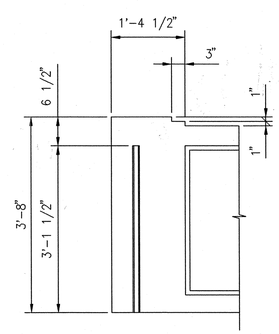

PIER PILASTER DETAIL
SCALE: 3/4" = 1'-0"

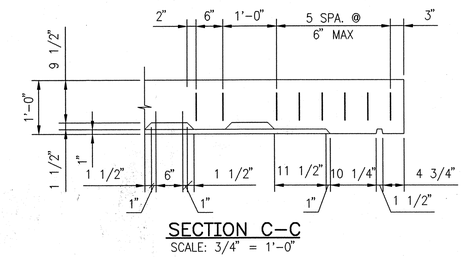

SECTION C-C
SCALE: 3/4" = 1'-0"

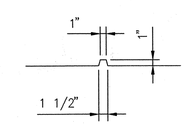

DETAIL "A"
SCALE: 1" = 1'-0"

REVISIONS	
DATE	REVISION
11/07/03	AS BUILT

RICHARD T. O'CONNOR REGISTERED No. 17778 STATE OF INDIANA PROFESSIONAL ENGINEER

RECOMMENDED FOR APPROVAL Richard T. O'Connor DESIGN ENGINEER DATE

DESIGNED: SCJ DRAWN: DRD

CHECKED: CHECKED: SCJ

INDIANA DEPARTMENT OF TRANSPORTATION

RAILING DETAILS
CHASE STREET OVER I-80/I-94

HORIZONTAL SCALE	BRIDGE FILE
AS NOTED	I-80-8-5467
VERTICAL SCALE	DESIGNATION
	9709110
SURVEY BOOK	SHEET
	24 of 57
CONTRACT	PROJECT
B-26411	IM-80-1(163)

Time: 14:23:34
Date: 11/5/03
Scale: 1:1(PS)
Drawing File: 603020-1\CHASE\CHASE-24.dwg DWG (dduncan)

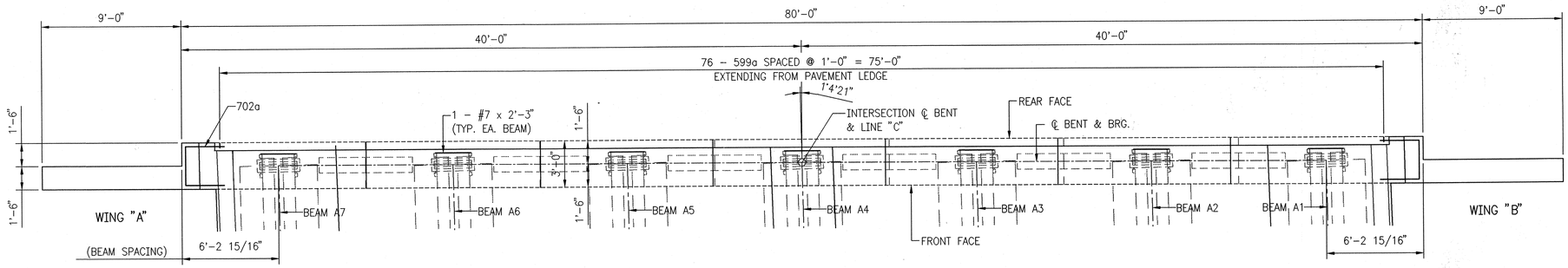

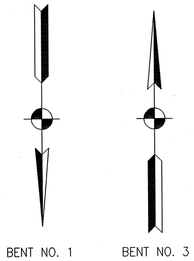

CAP PLAN

SCALE: 1/4" = 1'-0"

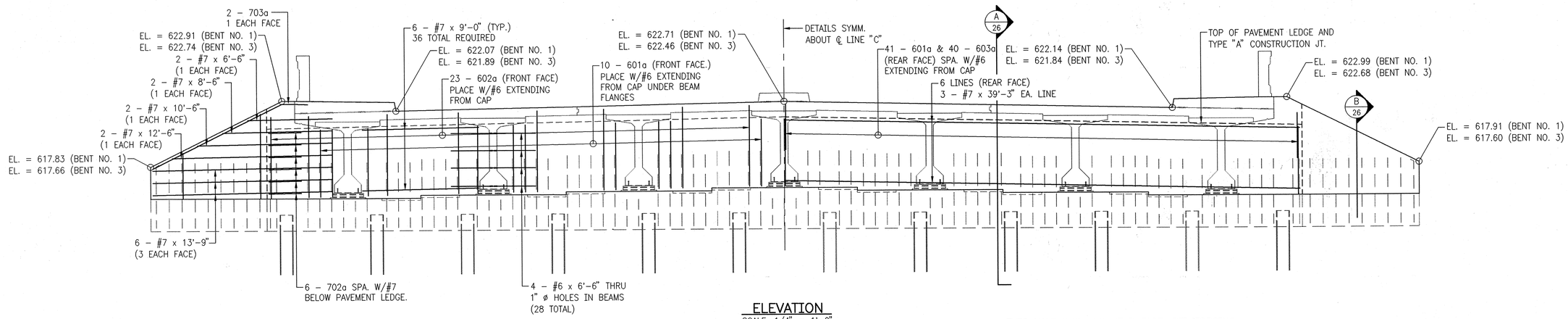

THIS HALF SHOWING FRONT FACE, REINFORCING

ELEVATION

SCALE: 1/4" = 1'-0"

THIS HALF SHOWING REAR FACE, REINFORCING

REVISIONS	
DATE	REVISION
02-27-03	MISCELLANEOUS REVISIONS
11/07/03	AS BUILT

RICHARD T. O'CONNOR REGISTERED No. 17778 STATE OF INDIANA PROFESSIONAL ENGINEER

RECOMMENDED FOR APPROVAL Richard T. O'Connor
DESIGN ENGINEER DATE

DESIGNED: SCJ DRAWN: DRD
CHECKED: CHECKED: SCJ

INDIANA
DEPARTMENT OF TRANSPORTATION

SLAB DETAILS - BENT NO. 1 (BENT 3 SIMILAR)
CHASE STREET OVER I-80/I-94

HORIZONTAL SCALE	BRIDGE FILE
AS NOTED	I-80-8-5467
VERTICAL SCALE	DESIGNATION
	9709110
SURVEY BOOK	SHEET
	25 of 57
CONTRACT	PROJECT
B-26411	IM-80-1(163)

Time: 10:57:27
Date: 12/12/2003
Scale: 1=40(PS)
Drawing File: 603020-1\CHASE\CHASE-25.dwg.DWG (dduncan)

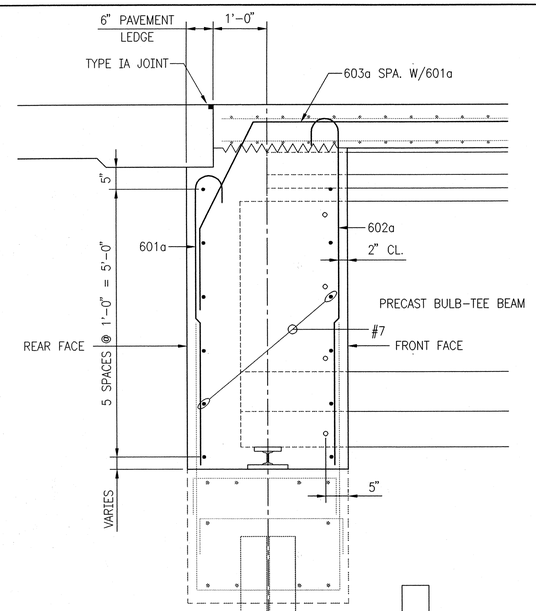

SECTION A 26
SCALE: 3/4" = 1'-0"

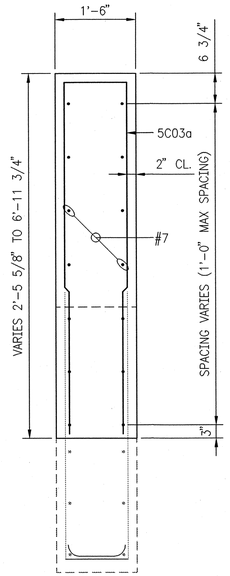

SECTION B 26
SCALE: 3/4" = 1'-0"

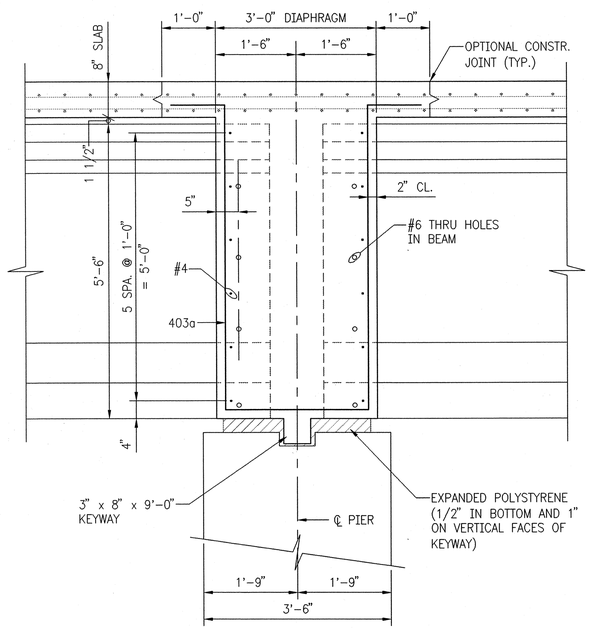

SECTION C 26
SCALE: 3/4" = 1'-0"

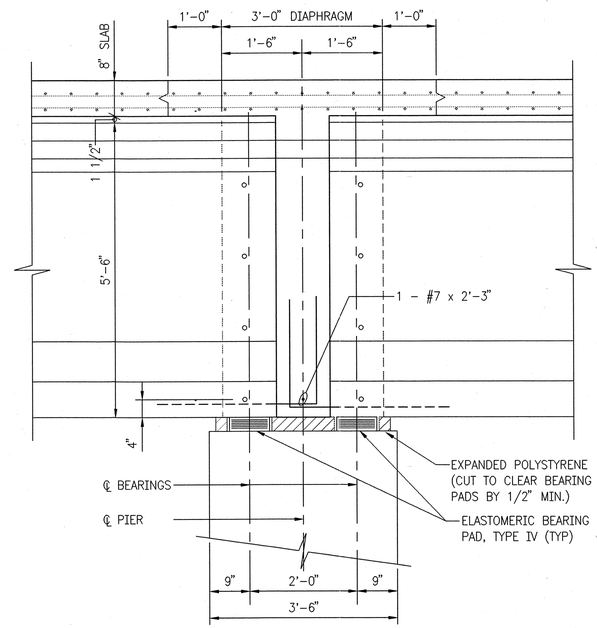

SECTION D 26
SCALE: 3/4" = 1'-0"

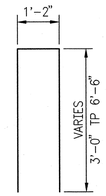

BENDING DIAGRAM

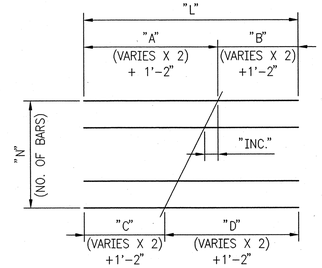

CUTTING DIAGRAM

TABLE							
MARK	"N"	"L"	"A"	"B"	"C"	"D"	"INC"
5C03a	8	21'-4"	7'-2"	14'-2"	14'-2"	7'-2"	1'-0"

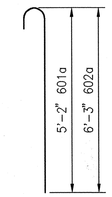

601a x 5'-10"
602a x 6'-11"

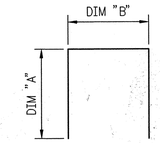

MARK	"A"	"B"	LENGTH
402a	11 1/2"	3'-4"	5'-3"
405a	2'-4"	5"	5'-1"
701a	1'-3"	27'-6"	30'-0"
702a	2'-3"	2'-3"	6'-9"

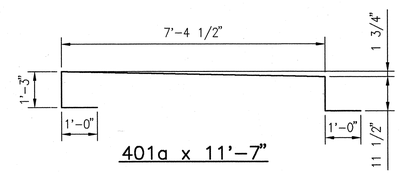

401a x 11'-7"

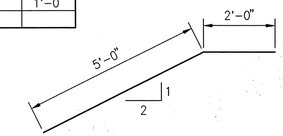

703a x 13'-3"

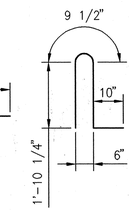

501a x 5'-4"

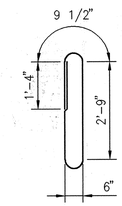

502 x 8'-5"

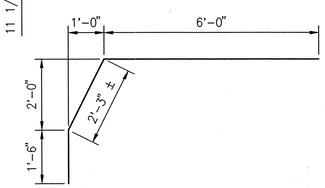

603a x 9'-9"

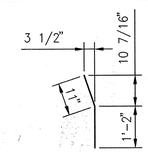

599a x 2'-1"

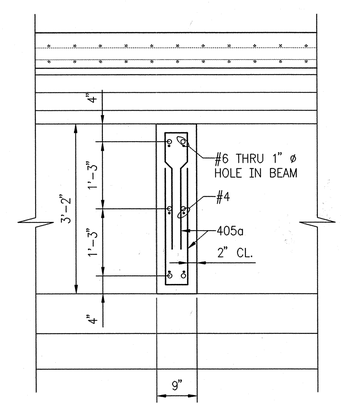

SECTION THRU INTERMEDIATE DIAPHRAGMS
SCALE: 3/4" = 1'-0"

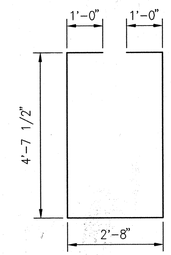

403a x 13'-11"

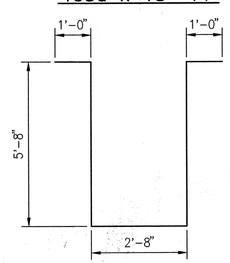

404a x 16'-0"

BILL OF MATERIALS

REINFORCING STEEL EPOXY COATED			
SIZE & MARK	NO. OF BARS	LENGTH	WEIGHT LBS.
#9	150	36'-9"	
TOTAL #9			18,743
701a	32	30'-0"	
702a	24	6'-9"	
703a	8	13'-3"	
#7	36	29'-3"	
#7	24	13'-9"	
#7	8	12'-6"	
#7	8	10'-6"	
#7	72	9'-0"	
#7	8	8'-6"	
#7	64	6'-6"	
#7	14	2'-3"	
TOTAL #7			8,091
601a	204	5'-7"	
602a	92	6'-11"	
603a	160	9'-9"	
#6	156	6'-6"	
#6	40	3'-3"	
TOTAL #6			6,805
501a	892	5'-4"	
502a	632	8'-5"	
5C03a	16	21'-4"	
599a	152	2'-1"	
#5	615	40'-0"	
#5	123	35'-9"	
#5	1888	39'-0"	
TOTAL #5			118,239
401a	448	11'-7"	
402a	224	5'-3"	
403a	24	13'-11"	
404a	36	16'-0"	
405a	264	5'-1"	
#4	90	40'-0"	
#4	21	33'-3"	
#4	48	10'-3"	
#4	72	10'-0"	
#4	12	9'-0"	
#4	12	6'-3"	
TOTAL #4			10,515
TOTAL REINFORCING E.C.			161,671
CONCRETE			CYS
CLASS "C" IN SUPERSTRUCTURE			
END DIAPHRAGMS			105.6
SLAB & INT. DIAPHRAGM			505.7
MID SPAN DIAPHRAGMS			11.3
SIDEWALKS			105.8
MEDIAN CURB			21.0
TOTAL "C" IN SUPERSTRUCTURE			749.4
MISCELLANEOUS			(QTY.)
SURFACE SEAL (ESTIMATED)			24,425 SFT.
MASONRY COATING (ESTIMATED)			8,515 SFT.
FIELD DRILLED HOLE IN CONC.			448 EACH

REVISIONS	
DATE	REVISION
11/07/03	AS BUILT

REGISTERED No. 17778 STATE OF INDIANA PROFESSIONAL ENGINEER
RICHARD T. O'CONNOR

RECOMMENDED FOR APPROVAL Richard T. O'Connor
DESIGN ENGINEER DATE

DESIGNED: SCJ DRAWN: DRD
CHECKED: DOC CHECKED: SCJ

INDIANA DEPARTMENT OF TRANSPORTATION

SUPERSTRUCTURE DETAILS & BILL OF MATERIALS
CHASE STREET OVER I-80/I-94

HORIZONTAL SCALE	BRIDGE FILE
AS NOTED	I-80-8-5467
VERTICAL SCALE	DESIGNATION
	9709110
SURVEY BOOK	SHEET
	26 of 57
CONTRACT	PROJECT
B-26411	IM-80-1(163)

Time: 10:59:1
Date: 11/7/2003
Scale: 1=1(PS)
Drawing File: 603020-1\CHASE\CHASE-26.dwg DWG (dduncan)

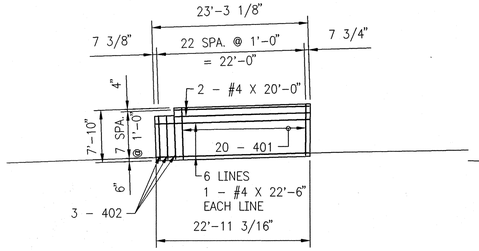

SOUTHWEST SIDEWALK PLAN
SCALE: 3/32" = 1'-0"

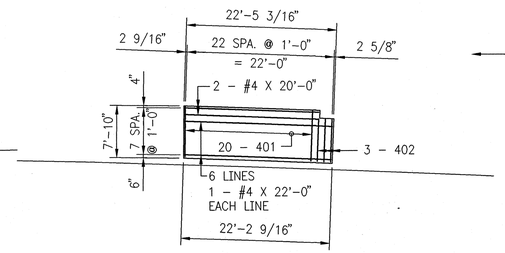

NORTHWEST SIDEWALK PLAN
SCALE: 3/32" = 1'-0"

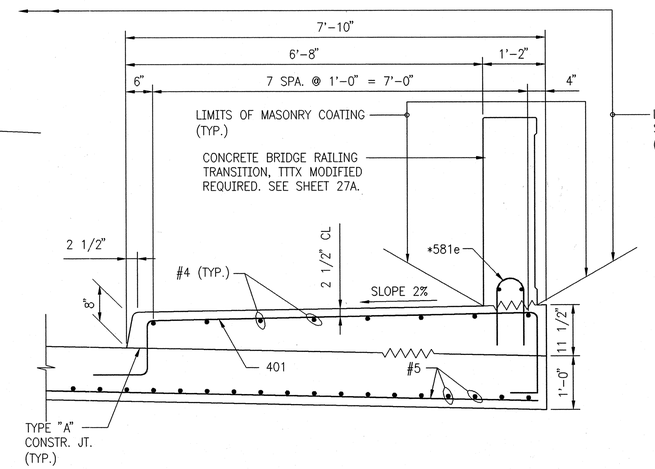

SIDEWALK DETAIL
SCALE: 3/4" = 1'-0"

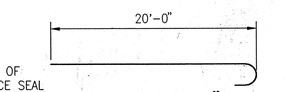

591 X 20'-7"

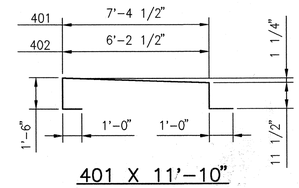

401 X 11'-10"
402 X 10'-8"

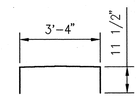

403 X 5'-3"

APPROACH SLAB BILL OF MATERIALS

REINFORCING STEEL PLAIN			
SIZE & MARK	NO. OF BARS	LENGTH	WEIGHT LBS
591	302	20'-7"	
#5	34	37'-6"	
#5	6	37'-0"	
#5	2	31'-9"	
#5	2	27'-9"	
#5	1	14'-6"	
#5	32	3'-3"	
TOTAL #5			8293
TOTAL REINFORCING (PLAIN)			8293
EPOXY COATED REINFORCING STEEL			
401	80	11'-10"	
402	6	10'-8"	
403	44	5'-3"	
#4	6	22'-6"	
#4	6	22'-0"	
#4	8	21'-0"	
#4	20	20'-0"	
TOTAL #4			1387
4 BRIDGE RAILING TRANS., TTTX @ 514 lbs. EACH			2068
TOTAL EPOXY COATED REINFORCING			3455
MISCELLANEOUS			(QTY.)
REINF. CONC. BRIDGE APPR. 12"			368 SYS.
SURFACE SEAL (ESTIMATED)			3311 SFT.
COMPACTED AGG. FOR BASE			
0, SIZE 53			124.2 TONS
CURB WALK, CONCRETE			95 SYS.
FIELD DRILLED HOLES			84 EA.
MASONRY COATING			705 SFT.

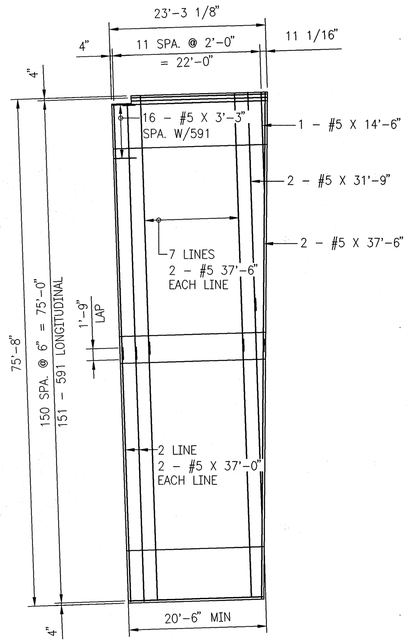

SOUTH BRIDGE APPROACH
SCALE: 3/32" = 1'-0"

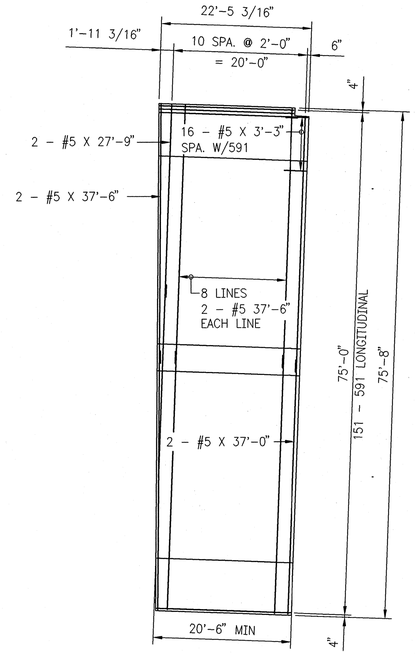

NORTH BRIDGE APPROACH
SCALE: 3/32" = 1'-0"

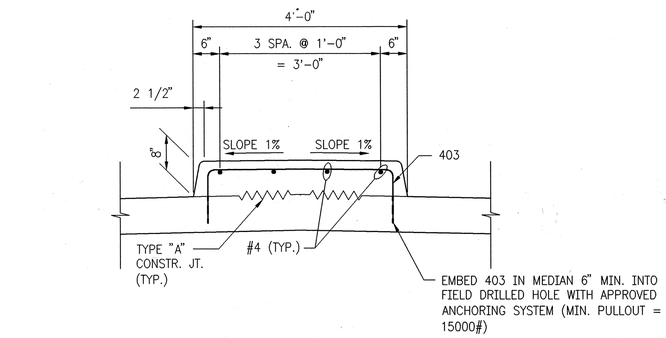

MEDIAN CURB DETAIL
SCALE: 3/4" = 1'-0"

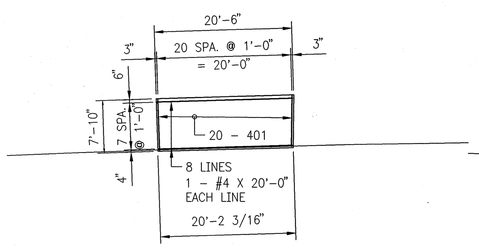

SOUTHEAST SIDEWALK PLAN
SCALE: 3/32" = 1'-0"

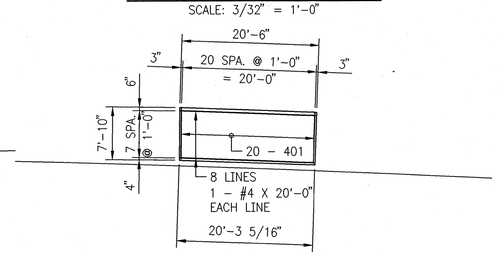

NORTHEAST SIDEWALK PLAN
SCALE: 3/32" = 1'-0"

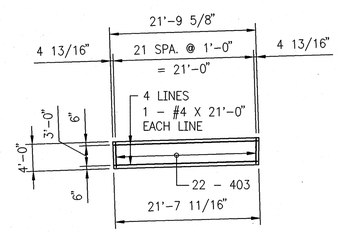

SOUTH MEDIAN CURB PLAN
SCALE: 3/32" = 1'-0"

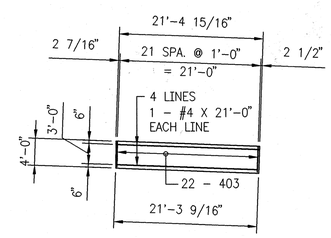

NORTH MEDIAN CURB PLAN
SCALE: 3/32" = 1'-0"

NOTES:

FOR RAILING DETAILS, SEE SHEET 8.

FOR GENERAL NOTES, SEE SHEET 2.

FOR REINFORCING BAR NOTES, SEE STANDARD DRAWING 703-BRST-01.

FOR ADDITIONAL APPROACH DETAILS, SEE STANDARD DRAWINGS 610-RCBA-02, 610-RCBA-04 AND 610-RCBA-06.

*FOR BAR BENDS AND REINFORCING NOT SHOWN SEE STANDARD DRAWING 706-TTTX-01

REVISIONS	
DATE	REVISION
02-27-03	REVISED NOTE FOR RAILING TRANSITION & B.O.M.
11/07/03	AS BUILT

RICHARD T. O'CONNOR REGISTERED No. 17778 STATE OF INDIANA PROFESSIONAL ENGINEER

RECOMMENDED FOR APPROVAL — DESIGN ENGINEER — DATE

DESIGNED: SCJ | DRAWN: MJF
CHECKED: DOC | CHECKED: DOC

INDIANA DEPARTMENT OF TRANSPORTATION

BRIDGE APPROACH DETAILS
CHASE STREET OVER I-80/I-94

HORIZONTAL SCALE	BRIDGE FILE
AS NOTED	I-80-8-5467
VERTICAL SCALE	DESIGNATION
	9709110
SURVEY BOOK	SHEET
	27 of 57
CONTRACT	PROJECT
B-26411	IM-80-1(163)

Time: 11:11:49
Date: 11/21/2003
Scale: 1:1 (PS)
Drawing File: 603020-I-\CHASE\chase-27.dwg.DWG (dduncan)

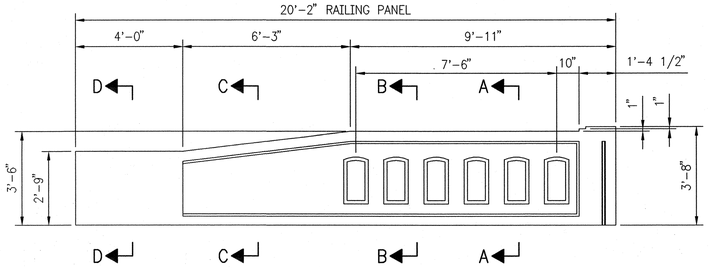

ELEVATION – SHOWING CONCRETE DIMENSIONS

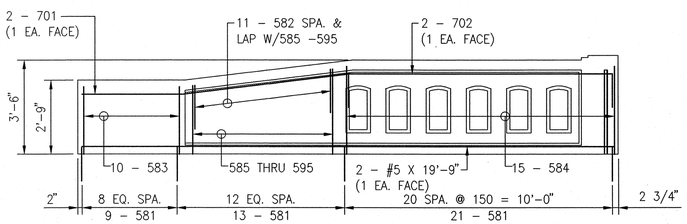

ELEVATION – SHOWING REINFORCING

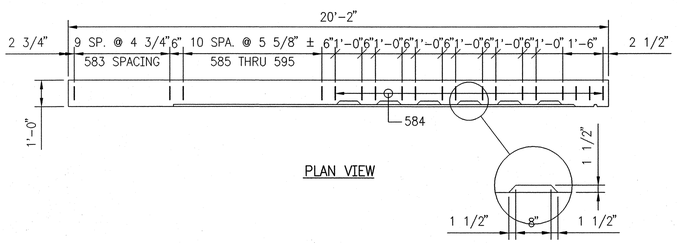

PLAN VIEW

CONCRETE BRIDGE RAILING TRANSITION
DETAILS – TTTX MODIFIED

SCALE: 3/8" = 1'-0"

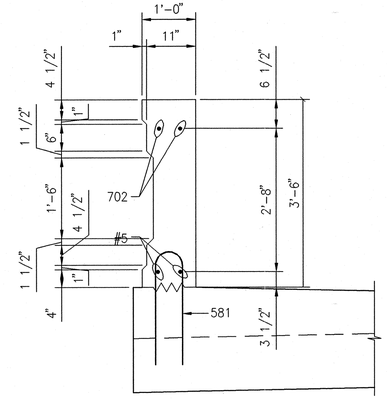

SECTION A–A

SCALE: 3/4" = 1'-0"

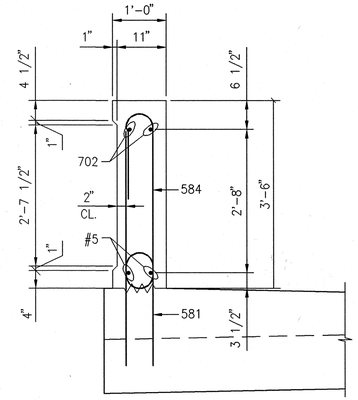

SECTION B–B

SCALE: 3/4" = 1'-0"

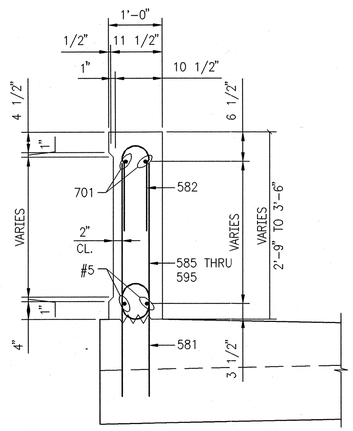

SECTION C–C

SCALE: 3/4" = 1'-0"

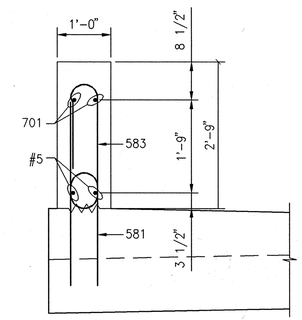

SECTION D–D

SCALE: 3/4" = 1'-0"

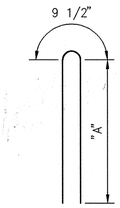

MARK	"A"	LENGTH
585	2'-0 1/4"	4'-10"
586	2'-1 1/4"	5'-0"
587	2'-2 1/4"	5'-2"
588	2'-3 1/4"	5'-4"
589	2'-4 1/4"	5'-6"
590	2'-5 1/4"	5'-8"
591	2'-6 1/4"	5'-10"
592	2'-7 1/4"	6'-0"
593	2'-8 1/4"	6'-2"
594	2'-9 1/4"	6'-4"
595	2'-10 1/4"	6'-6"

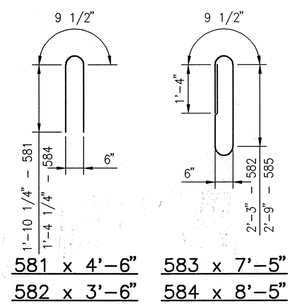

581 x 4'-6" 583 x 7'-5"

582 x 3'-6" 584 x 8'-5"

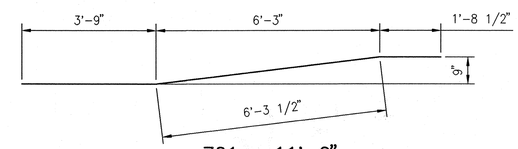

701 x 11'-9"

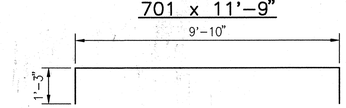

702 x 12'-4"

FOR ADDITIONAL DETAILS, SEE STANDARD DRAWING 706–TTTX–01

BILL OF MATERIALS – 4 THUS

REINFORCING STEEL EPOXY COATED			
SIZE & MARK	NO. OF BARS	LENGTH	WEIGHT LBS.
701	2	11'-9"	
702	2	12'-4"	
TOTAL #7			99
581	43	4'-6"	
582	11	3'-6"	
583	10	7'-5"	
584	15	8'-5"	
585	1	4'-10"	
586	1	5'-0"	
587	1	5'-2"	
588	1	5'-4"	
589	1	5'-4"	
590	1	5'-8"	
591	1	5'-10"	
592	1	6'-0"	
593	1	6'-2"	
594	1	6'-4"	
595	1	6'-6"	
#5	2	19'-9"	
TOTAL #5			557
TOTAL REINFORCING E.C.			656
MISCELLANEOUS			(QTY.)
CONCRETE BRIDGE RAILING TRANSIITION, TTTX MODIFIED			1 EACH
SURFACE SEAL (ESTIMATED)			155 SFT.
MASONRY COATING (ESTIMATED)			155 SFT.

REVISIONS	
DATE	REVISION
02-27-03	ADDED SHEET
11/07/03	AS BUILT

RICHARD T. O'CONNOR REGISTERED No. 17778 STATE OF INDIANA PROFESSIONAL ENGINEER

RECOMMENDED FOR APPROVAL Richard T. O'Connor DESIGN ENGINEER DATE

DESIGNED: SCJ DRAWN: DRD

CHECKED: DOC CHECKED: SCJ

INDIANA
DEPARTMENT OF TRANSPORTATION

CONCRETE BRIDGE RAILING TRANSITION
CHASE STREET OVER I-80/I-94

HORIZONTAL SCALE	BRIDGE FILE
AS NOTED	I-80-8-5467
VERTICAL SCALE	DESIGNATION
	9709110
SURVEY BOOK	SHEET
	27A of 57
CONTRACT	PROJECT
B-26411	IM-80-1(163)

Time: 14:44:45
Date: 11/7/2003
Scale: 1=1(PS)
Drawing File: 60320-1\GEORGIA\GCOR-26.dwg.DWG (dduncan)

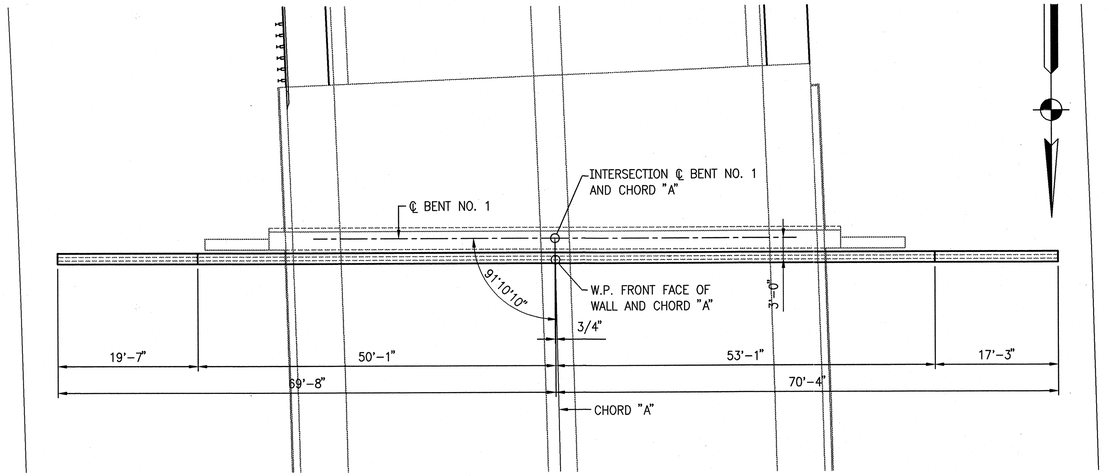

WALL NO. 1 @ BENT NO. 1

SCALE: 1" = 10'-0"

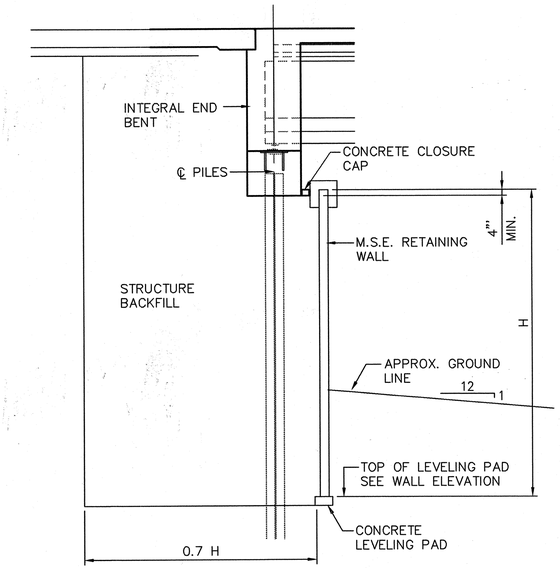

MSE WALL SECTION

SCALE: 1/4" = 1'-0"

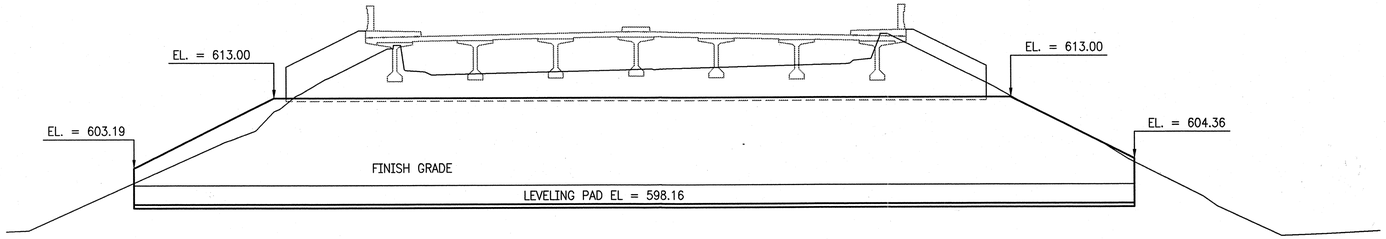

WALL NO. 1 ELEVATION

SCALE: 1" = 10'-0"

ESTIMATED QUANTITIES		
ITEM	UNIT	TOTAL
LEVELING PAD	LFT	140
FACE PANELS	SFT.	1,907
WALL ERECTION	SFY	1,907
STRUCTURE BACKFILL	CYS	841.8

REVISIONS	
DATE	REVISION
3-26-03	ADDED CONCRETE CLOSURE CAP
11/07/03	AS BUILT

RICHARD T. O'CONNOR REGISTERED No. 17778 STATE OF INDIANA PROFESSIONAL ENGINEER

RECOMMENDED FOR APPROVAL Richard T. O'Connor
DESIGN ENGINEER DATE

DESIGNED: SCJ DRAWN: SCJ
CHECKED: DOC CHECKED: DOC

INDIANA
DEPARTMENT OF TRANSPORTATION

MSE WALL DETAILS – BENT NO. 1
CHASE STREET OVER I-80/94

HORIZONTAL SCALE	BRIDGE FILE
1" = 10'	I-80-8-5467
VERTICAL SCALE	DESIGNATION
	9709110
SURVEY BOOK	SHEET
	28 of 57
CONTRACT	PROJECT
B-26411	IM-80-1(163)

Time: 15:19:30
Date: 11/7/2003
Scale: 1=10(PS)
Drawing File: 603020-1\CHASE\WALL1.dwg\DWG (dduncan)

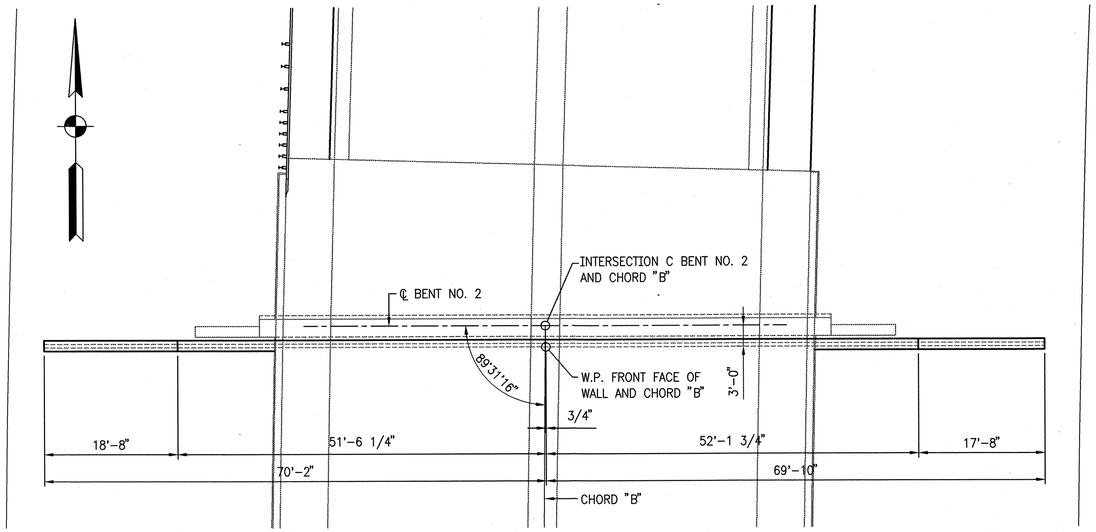

WALL NO. 2 @ BENT NO. 3
SCALE: 1" = 10'-0"

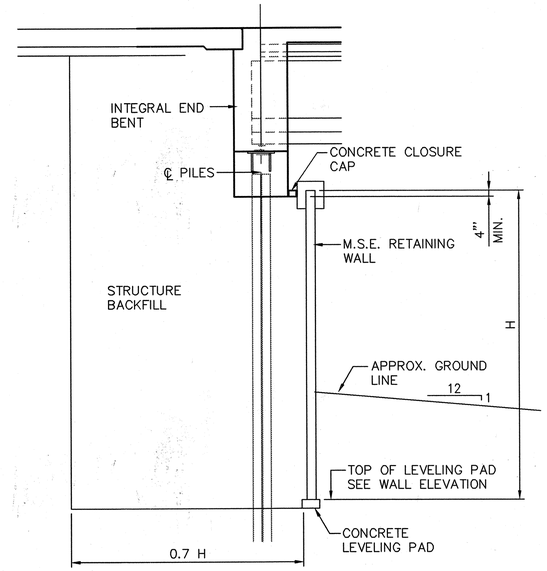

WALL NO. 2 @ BENT NO. 3
SCALE: 1" = 10'-0"

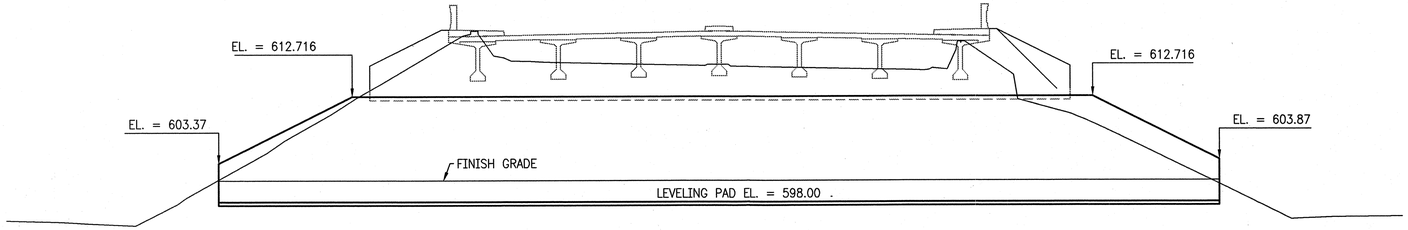

WALL NO. 2 ELEVATION
SCALE: 1" = 10'-0"

ESTIMATED QUANTITIES		
ITEM	UNIT	TOTAL
LEVELING PAD	LFT	140
FACE PANELS	SFT.	1,895
WALL ERECTION	SFY	1,895
STRUCTURE BACKFILL	CYS	793.2

REVISIONS	
DATE	REVISION
3-26-03	ADDED CONCRETE CLOSURE CAP
11/07/03	AS BUILT

RICHARD T. O'CONNOR REGISTERED No. 17778 STATE OF INDIANA PROFESSIONAL ENGINEER

RECOMMENDED FOR APPROVAL Richard T. O'Connor
DESIGN ENGINEER DATE

DESIGNED: SCJ DRAWN: SCJ
CHECKED: DOC CHECKED: DOC

INDIANA
DEPARTMENT OF TRANSPORTATION

MSE WALL DETAILS – BENT NO. 3
CHASE STREET OVER I-80/94

HORIZONTAL SCALE	BRIDGE FILE
AS NOTED	I-80-8-5467
VERTICAL SCALE	DESIGNATION
	9709110
SURVEY BOOK	SHEET
	29 of 57
CONTRACT	PROJECT
B-26411	IM-80-1(163)

Time: 15:19:30
Date: 11/20/2003
Scale: 1=10(PS)
Drawing File: 603020-1\CHASE\WALL1.dwg DWG (ddunc0n)

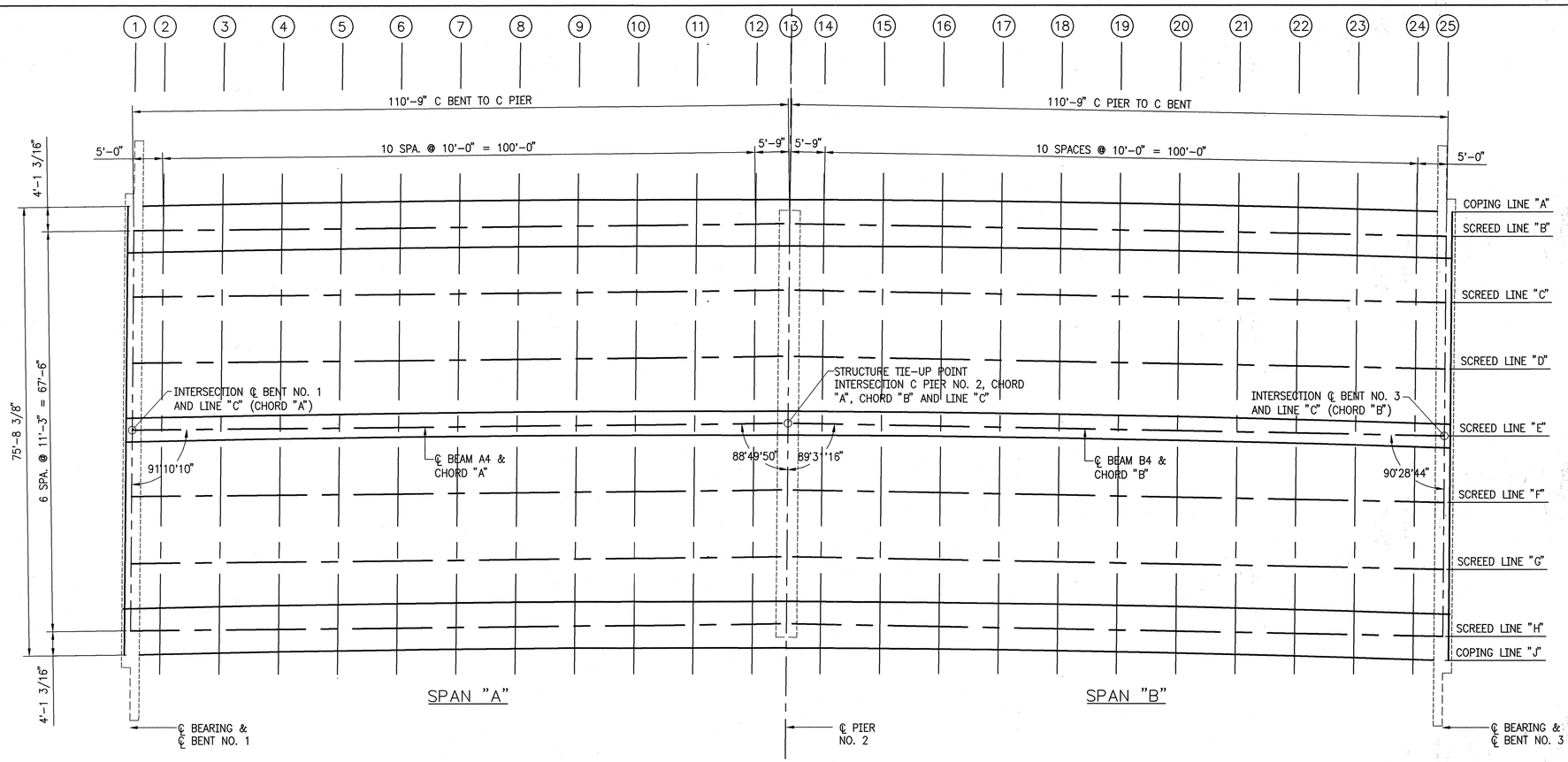

SCREED PLAN
SCALE: 3/32" = 1'-0"

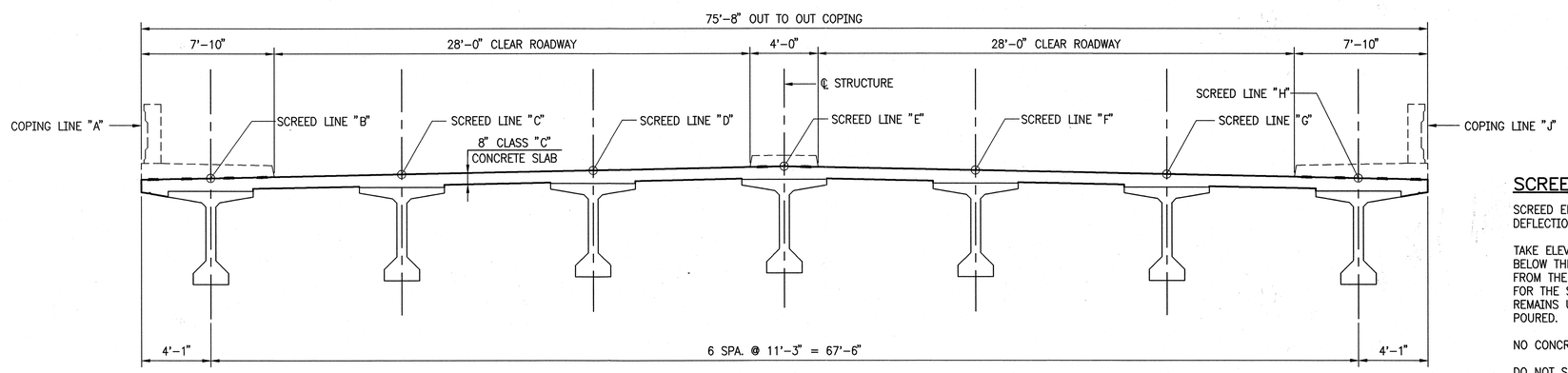

TYPICAL SECTION
SCALE: 1/4" = 1'-0"

SCREED NOTES:

SCREED ELEVATIONS SHALL BE DETERMINED BY ADDING THE CONCRETE DEAD LOAD DEFLECTIONS TO THE FINAL CONCRETE ELEVATIONS AT ALL SCREEDS POINTS.

TAKE ELEVATIONS AT ALL SCREED POINTS ON TOP OF GIRDER, ENTER THE ELEVATIONS BELOW THE TABULATED ELEVATIONS IN THE SCREED TABLE, SUBTRACT THESE ELEVATIONS FROM THE TABULATED ELEVATIONS AND USE THE RESULTING DIMENSION AS THE HEIGHT FOR THE SETTING OF THE SCREED OR COPING FORM ABOVE THAT POINT. THIS DIMENSION REMAINS UNCHANGED REGARDLESS OF HOW MUCH OR IN WHAT ORDER THE CONCRETE IS POURED.

NO CONCRETE IS TO BE POURED UNTIL THE ABOVE OPERATION IS COMPLETE.

DO NOT SET SCREEDS OR COPING FORMS BY LEVELING.

SCREED ELEVATIONS TO BE FURNISHED UPON REQUEST.

REVISIONS	
DATE	REVISION
11/07/03	AS BUILT

RICHARD T. O'CONNOR REGISTERED No. 17778 STATE OF INDIANA PROFESSIONAL ENGINEER

RECOMMENDED FOR APPROVAL — DESIGN ENGINEER — DATE

DESIGNED: SCJ DRAWN: MJF
CHECKED: DOC CHECKED: DOC

INDIANA DEPARTMENT OF TRANSPORTATION

SCREED PLAN
CHASE STREET OVER I-80/I-94

HORIZONTAL SCALE	BRIDGE FILE
AS NOTED	I-80-8-5467
VERTICAL SCALE	DESIGNATION
	9709110
SURVEY BOOK	SHEET
	30 of 57
CONTRACT	PROJECT
B-26411	IM-80-1(163)

Time: 7:39:41
Date: 11/7/2002
Scale: 1=1(PS)
Drawing File: 60020-1\CHASE\SCRD-PLN.dwg.DWG (mfrancis)

PAVEMENT QUANTITIES AND APPROACH TABLE

LOCATION	DESCRIPTION (APPROACH TYPE OR CLASS)	WIDTH	LENGTH	RADII	DISTANCE BEYOND R/W LINE	SURFACE BEYOND R/W LINE: COMPACTED AGGREGATE BASE	SURFACE BEYOND R/W LINE: HMA	SURFACE BEYOND R/W LINE: CONCRETE	GRADE 1	GRADE 2	EXCAVATION CUT	EXCAVATION FILL	CLEAR ZONE AT DRIVE	HMA FOR APPROACHES LBS/SYD 10"	HMA FOR APPROACHES LBS/SYD 9"	HMA FOR APPROACHES LBS/SYD VAR.	HMA FOR APPROACHES LBS/SYD 1"	QC/QA – HMA MATERIALS LBS/SYD: SURFACE 9.5 mm M-LINE 165	QC/QA – HMA MATERIALS LBS/SYD: .	QC/QA – HMA MATERIALS LBS/SYD: INTERMD. 19 mm M-LINE 275	QC/QA – HMA MATERIALS LBS/SYD: INTERMD. C19 mm M-LINE 302.5	QC/QA – HMA MATERIALS LBS/SYD: INTERMD. C19 mm M-LINE 600	QC/QA – HMA MATERIALS LBS/SYD: BASE 19 mm M-LINE 440	QC/QA – HMA MATERIALS LBS/SYD: BASE 19 mm M-LINE 330	SEAL COAT TYPE 2	SEAL COAT TYPE 5	ASPHALT MATERIAL FOR: PRIME COAT	ASPHALT MATERIAL FOR: TACK COAT	COMPACTED AGGREGATE FOR BASE, TYPE O, NO. 53 DEPTH 7"	COMPACTED AGGREGATE FOR BASE, TYPE O, NO. 53 DEPTH 6"	COMPACTED AGGREGATE FOR BASE, TYPE O, NO. 53 DEPTH .	COMPACTED AGGREGATE FOR BASE, TYPE O, NO. 53 DEPTH .	COMPACTED AGGREGATE FOR SURFACE NO. 73 DEPTH .	COMPACTED AGGREGATE FOR SURFACE NO. 73 DEPTH .	TERMINAL JOINT	PCCP PAVEMENT PLAIN 6"	SNOWPLOWABLE RAISED PAVEMENT MARKERS	REINFORCED CONC. BRIDGE APPROACH, 12"	ITEM 39	ITEM 40	REMARKS
		LFT	LFT	LFT	LFT	LFT	LFT	LFT	%	%	CYS	CYS	LFT	TONS	TONS	TONS	TONS	TONS	TONS	TONS	TONS	TONS	TONS	TONS	TONS	SYS	SFT	SFT	SYS	TONS	TONS	.	.	.	.	LFT	SYS	EACH	SYS	.	.	
13+05.85 to 25+20.46	HMA PAVEMENT																	589		981.6	1200.4	156.9	1570.5	1305.3																	
27+87.03 to 39+65.00	HMA PAVEMENT																	562.2		937.2	1163.4	152.2	1499.6	1271.9																	
25+20.42	BRIDGE APPROACH	FULL	20.5																												62.1							184			
27+87.03	BRIDGE APPROACH	FULL	20.5																												60.9							181			
13+38.15	CLASS I	14	12.6	25, 15					+2	+8.77																											53					
13+59.86	CLASS I	12	17	25, 15					−10	−1.97																											61					
17+00.00	CLASS VII	80	22	25, 15					−0.23																						96.1						273					
19+32.83	CLASS I	19		25, 10					−10	−8.13								12.8		21.4	23.5		34.2	25.6																		
20+03.61	STREET APPROACH	22		30, 30					−10	−8.13								12.8		21.4	23.5		34.2	25.6																		
39+20.00	CLASS III	40	14	10, 10					−8																						26							107			
39+24.00	CLASS III	37		30, 30					−10	−8.13																					24.7							73			
TOTALS																		1164		1940.2	2387.3	309.1	3104.3	2602.8							269.8						629		365			

STRUCTURE DATA

STRUCTURE NUMBER	LOCATION: STATION	LOCATION: LEFT	LOCATION: CROSS	LOCATION: RIGHT	SIZE	PIPE TYPE	MANHOLE, INLET, CATCH BASIN, OR SPECIALTY STRUCTURE	LENGTH	SKEW	FLOW LINE: COVER	FLOW LINE: UP STREAM	FLOW LINE: DOWN STREAM	SERVICE LIFE	SITE DESIGNATION	pH	BACKFILL METHOD	B-BORROW FOR STR. BACKFILL	REVETMENT RIPRAP	CONCRETE, CLASS A, FOR STR.	PIPE END SECTION	TOP OF CASTING AT EDGE OF PVM'T.	SAFETY METAL END SECTION: TYPE	SAFETY METAL END SECTION: SLOPE	SAFETY METAL END SECTION: EA.	CONNECT TO STR.	REMARKS
					INCHES			LFT		IN.	ELEV.	ELEV.	YR.				CYS	TONS	CYS	EA.	ELEV.					
10	15+40 "C"	X			12	2	INLET TYPE J-10	57		26	589.98	589.80	50	N/A	6.5	1					593.91				11	
11	15+40 "C"			X	12	2	INLET TYPE M-10	27		30	589.80	589.72	50	N/A	6.5	1				1	593.91					RIPRAP PAD @ OUTLET
12	16+55 "C"	X			12	2	INLET TYPE B-15	66		26	589.44	589.18	50	N/A	6.5	1					593.40				13	
13	16+79.43 "C"			X	12	2	INLET TYPE C-15	42		42	589.24	589.11	50	N/A	6.5	1				1	593.35					RIPRAP PAD @ OUTLET
14	17+77.5 "C"	X			12	2	INLET TYPE B-15	57		26	589.84	589.66	50	N/A	6.5	1					593.74				15	
15	17+77.5 "C"			X	12	2	INLET TYPE C-15	54		42	589.66	589.49	50	N/A	6.5	1				1	593.74					RIPRAP PAD @ OUTLET
16	20+60 "C"	X			12	2	INLET TYPE J-10	57		26	596.06	595.88	50	N/A	6.5	1					599.99				17	
17	20+60 "C"			X	12	2	INLET TYPE M-10	15		42	595.88	595.83	50	N/A	6.5	1				1	599.99					RIPRAP PAD @ OUTLET
18	25+00 "C"	X			12	2	INLET TYPE J-10	57		26	616.68	616.50	50	N/A	6.5	1					620.61				19	
19	25+00 "C"			X	12	2	INLET TYPE M-10	27		24	616.50	606.90	50	N/A	6.5	1				1	620.61					2 – 45° ELBOWS REQ'D, RIPRAP PAD @ OUTLET
20	28+00 "C"	X			12	2	INLET TYPE J-10	57		26	616.68	616.50	50	N/A	6.5	1					620.61				21	
21	28+00 "C"			X	12	2	INLET TYPE M-10	27		24	616.50	606.90	50	N/A	6.5	1				1	620.61					2 – 45° ELBOWS REQ'D, RIPRAP PAD @ OUTLET
22	31+50 "C"			X	12	2	INLET TYPE J-10	57		26	600.17	599.99	50	N/A	6.5	1					604.10				23	
23	31+50 "C"	X			12	2	INLET TYPE M-10	12		40	599.99	599.95	50	N/A	6.5	1				1	604.10					RIPRAP PAD @ OUTLET
24	33+85.45 "C"			X	12	2	INLET TYPE B-15	57		20	596.65	596.48	50	N/A	6.5	1					600.08				25	
25	33+85.45 "C"	X			12	2	INLET TYPE C-15	28		36	596.48	596.04	50	N/A	6.5	1				1	600.08					OUTLET STA. 33+50, RIPRAP PAD @ OUTLET
26	34+00 "C"			X	12	2	INLET TYPE J-10	15		20	596.70	596.65	50	N/A	6.5	1					600.10				24	
27	34+00 "C"	X			12	2	INLET TYPE M-10	15		20	596.52	596.48	50	N/A	6.5	1					600.10				25	
100	39+65 ± "C"	X					EXISTING																			CLEAN INLET
101	39+65 ± "C"			X			EXISTING																			CLEAN INLET

PAVED SIDE DITCH, RIPRAP DITCH AND SODDING SUMMARY TABLE

LOCATION: FROM STATION	LOCATION: TO STATION	LEFT	MEDIAN	RIGHT	PAVED SIDE DITCH: ACTUAL LENGTH	PAVED SIDE DITCH: CUT OFF WALLS (2.5 m EQUIVAL. LENGTH EACH)	PAVED SIDE DITCH: LUGS (2.5 m EQUIVAL. LENGTH EACH)	TOTAL EQUIVALENT PAY LENGTHS TYPE					RIPRAP DITCH: REVETMENT RIPRAP	RIPRAP DITCH: UNIFORM RIPRAP	RIPRAP DITCH: GEOTEXTILES	SODDING: FOR PAVED SIDE DITCHES	SODDING: FOR DITCHES	SODDING: FOR MEDIAN	SODDING: FOR SHOULDER BREAK	SODDING: SODDING AT BRIDGE CONE	SODDING: TOTAL SODDING	NURSERY SODDING FOR LAWNS
					LFT	EACH	EACH	LFT	LFT	LFT	LFT	LFT	TONS	TONS	SYS	.	.	.	.	.	.	.
TOTALS																						

MAILBOX APPROACHES

LT/RT	BOX STATION	DESCRIPTION	WIDTH W,(m)	ASSEMBLY REQ'D SINGLE	DOUBLE	
		TOTAL				

REVISIONS

DATE	ITEM
4-11-03	REVISED DRIVE INFORMATION & STRUCTURE DATA REMARKS
11/07/03	AS BUILT

RICHARD T. O'CONNOR REGISTERED No. 17778 STATE OF INDIANA PROFESSIONAL ENGINEER

RECOMMENDED FOR APPROVAL — DESIGN ENGINEER — DATE

DESIGNED: SCJ DRAWN: DRD

CHECKED: DOC CHECKED: SCJ

INDIANA DEPARTMENT OF TRANSPORTATION

ROAD SUMMARY
CHASE STREET OVER I-80/I-94

HORIZONTAL SCALE	BRIDGE FILE
AS NOTED	I-80-8-5467
VERTICAL SCALE	DESIGNATION
	9709110
SURVEY BOOK	SHEET 32 of 57
CONTRACT	PROJECT
B-26411	IM-80-1(163)

Time: 9:52:52
Date: 11/7/2003
Scale: 1=1(PS)
Drawing File: 603020-1\CHASE\RD-summ.dwg DWG (dduncan)

		STRUCTURE NUMBER																					
		10	11	12	13	14	15	16	17	18	19	20	21	22	23	24	25	26	27				
PIPE TYPE/ SHAPE ***		/	/	/	/	/	/	/	/	/	/	/	/	/	/	/	/	/	/	/	/	/	/
SMOOTH PIPE SIZE		12"	12"	12"	12"	12"	12"	12"	12"	12"	12"	12"	12"	12"	12"	12"	12"	12"	12"				
CORRUGATED PIPE SIZE		12"	12"	12"	12"	12"	12"	12"	12"	12"	12"	12"	12"	12"	12"	12"	12"	12"	12"				
RCP/ RCHEP (S)	CLASS	II	II	II	II	II	II	II	II	II	II	II	II	II	II	II	II	II	II				
	$D_{0.3}$ RATING	50	50	50	50	50	50	50	50	50	50	50	50	50	50	50	50	50	50				
NON-REINFORCED CONCRETE PIPE, CLASS 3 (S)		OK	OK	OK	OK	OK	OK	OK	OK	OK	OK	OK	OK	OK	OK	OK	OK	OK	OK				
CORRUGATED PE PIPE, TYPE S (S) *																							
RIBBED PE PIPE (S) *																							
SMOOTH WALL PE PIPE (S) */ MAXIMUM DR																							
PROFILE WALL PVC PIPE (S)		OK	OK	OK	OK	OK	OK	OK	OK	OK	OK	OK	OK	OK	OK	OK	OK	OK	OK				
SMOOTH WALL PVC PIPE (S)																							
VITRIFIED CLAY PIPE, EXTRA STRENGTH (S)		OK	OK	OK	OK	OK	OK	OK	OK	OK	OK	OK	OK	OK	OK	OK	OK	OK	OK				
CORRUGATED STEEL PIPE/ PIPE-ARCH: FULLY BIT. PAVED & LINED (S)	CORR. PROFILE	2 5/8 x 1/2	2 5/8 x 1/2	2 5/8 x 1/2	2 5/8 x 1/2	2 5/8 x 1/2	2 5/8 x 1/2	2 5/8 x 1/2	2 5/8 x 1/2	2 5/8 x 1/2	2 5/8 x 1/2	2 5/8 x 1/2	2 5/8 x 1/2	2 5/8 x 1/2	2 5/8 x 1/2	2 5/8 x 1/2	2 5/8 x 1/2	2 5/8 x 1/2	2 5/8 x 1/2				
	THICKNESS	0.08"	0.08"	0.08"	0.08"	0.08"	0.08"	0.08"	0.08"	0.08"	0.08"	0.08"	0.08"	0.08"	0.08"	0.08"	0.08"	0.08"	0.08"				
ZINC COATED (C)	CORR. PROFILE																						
	THICKNESS																						
ZINC COATED W/ BPI (C)	CORR. PROFILE																						
	THICKNESS																						
ALUM. COATED TYPE 2 (C)	CORR. PROFILE																						
	THICKNESS																						
ALUM. COATED TYPE 2 W/ BPI (C)	CORR. PROFILE																						
	THICKNESS																						
POLYMER PRECOATED GALVANIZED (C)	CORR. PROFILE																						
	THICKNESS																						
POLYMER PRECOATED GALVANIZED W/ BPI (C)	CORR. PROFILE																						
	THICKNESS																						
FIBER BONDED BITUMINOUS COATED (C)	CORR. PROFILE																						
	THICKNESS																						
FIBER BONDED BITUMINOUS COATED W/ BPI (C)	CORR. PROFILE																						
	THICKNESS																						
CORRUGATED ALUM. ALLOY PIPE (C)	CORR. PROFILE																						
	THICKNESS																						
CORRUGATED ALUM. ALLOY PIPE W/ BPI (C)	CORR. PROFILE																						
	THICKNESS																						
STR. PLATE ALUMINUM ALLOY PIPE (C)	CORR. PROFILE																						
	THICKNESS																						
STR. PLATE ALUMINUM ALLOY PIPE W/ CFP (C)	CORR. PROFILE																						
	THICKNESS																						
STR. PLATE STEEL PIPE (C)	CORR. PROFILE																						
	THICKNESS **																						
STR. PLATE STEEL PIPE W/ CFP (C)	CORR. PROFILE																						
	THICKNESS **																						

		STRUCTURE NUMBER																
PIPE TYPE/ SHAPE ***		/	/	/	/	/	/	/	/	/	/	/	/	/	/	/	/	/
SMOOTH PIPE SIZE																		
CORRUGATED PIPE SIZE																		
RCP/ RCHEP (S)	CLASS																	
	$D_{0.3}$ RATING																	
NON-REINFORCED CONCRETE PIPE, CLASS 3 (S)																		
CORRUGATED PE PIPE, TYPE S (S) *																		
RIBBED PE PIPE (S) *																		
SMOOTH WALL PE PIPE (S) */ MAXIMUM DR																		
PROFILE WALL PVC PIPE (S)																		
SMOOTH WALL PVC PIPE (S)																		
VITRIFIED CLAY PIPE, EXTRA STRENGTH (S)																		
CORRUGATED STEEL PIPE/ PIPE-ARCH: FULLY BIT. PAVED & LINED (S)	CORR. PROFILE																	
	THICKNESS																	
ZINC COATED (C)	CORR. PROFILE																	
	THICKNESS																	
ZINC COATED W/ BPI (C)	CORR. PROFILE																	
	THICKNESS																	
ALUM. COATED TYPE 2 (C)	CORR. PROFILE																	
	THICKNESS																	
ALUM. COATED TYPE 2 W/ BPI (C)	CORR. PROFILE																	
	THICKNESS																	
POLYMER PRECOATED GALVANIZED (C)	CORR. PROFILE																	
	THICKNESS																	
POLYMER PRECOATED GALVANIZED W/ BPI (C)	CORR. PROFILE																	
	THICKNESS																	
FIBER BONDED BITUMINOUS COATED (C)	CORR. PROFILE																	
	THICKNESS																	
FIBER BONDED BITUMINOUS COATED W/ BPI (C)	CORR. PROFILE																	
	THICKNESS																	
CORRUGATED ALUM. ALLOY PIPE (C)	CORR. PROFILE																	
	THICKNESS																	
CORRUGATED ALUM. ALLOY PIPE W/ BPI (C)	CORR. PROFILE																	
	THICKNESS																	
STR. PLATE ALUMINUM ALLOY PIPE (C)	CORR. PROFILE																	
	THICKNESS																	
STR. PLATE ALUMINUM ALLOY PIPE W/ CFP (C)	CORR. PROFILE																	
	THICKNESS																	
STR. PLATE STEEL PIPE (C)	CORR. PROFILE																	
	THICKNESS **																	
STR. PLATE STEEL PIPE W/ CFP (C)	CORR. PROFILE																	
	THICKNESS **																	

LEGEND

RCP–	REINFORCED CONCRETE PIPE
RCHEP–	REINFORCED CONCRETE HORIZONTAL ELLIPTICAL PIPE
PE–	POLYETHYLENE
DR–	DIMENSION RATIO
PVC–	POLYVINYL CHLORIDE
BIT–	BITUMINOUS
CORR–	CORRUGATION
BPI–	BITUMINOUS PAVED INVERT
ALUM–	ALUMINUM
STR–	STRUCTURAL
CFP–	CONCRETE FIELD PAVING
CIR–	CIRCULAR PIPE
DEF–	DEFORMED PIPE
(S)–	SMOOTH PIPE MATERIAL
(C)–	CORRUGATED PIPE MATERIAL
OK–	ACCEPTABLE FOR USE
(LS)–	LOCK SEAM PIPE REQUIRED
*–	REFER TO STANDARD DRAWING 715-PHCL-18 OR 19 FOR NOMINAL DIAMETER APPROPRIATE FOR PAY ITEM DIAMETER
**–	TABULATED THICKNESS REFERS TO TOP & SIDE PLATES. BOTTOM PLATES SHALL BE OF NEXT GREATER AVAILABE THICKNESS.
***–	ALL STRUCTURES ARE CIRCULAR EXCEPT AS NOTED

1 REVISED PIPE MATERIAL 5/9/03

AS BUILT 11/07/03

RICHARD T. O'CONNOR REGISTERED No. 17778 STATE OF INDIANA PROFESSIONAL ENGINEER

RECOMMENDED FOR APPROVAL Richard T. O'Connor
DESIGN ENGINEER DATE

DESIGNED: SCJ DRAWN: DRD
CHECKED: DOC CHECKED: SCJ

INDIANA DEPARTMENT OF TRANSPORTATION

PIPE MATERIAL SELECTION SHEET
CHASE STREET OVER I-80/I-94

HORIZONTAL SCALE	BRIDGE FILE
AS NOTED	I-80-8-5467
VERTICAL SCALE	DESIGNATION
	9709110
SURVEY BOOK	SHEET
	33 of 57
CONTRACT	PROJECT
B-26411	IM-80-1(163)

Time: 9:43:27
Date: 11/10/2003
Scale: 1=1(PS)
Drawing File: 60020-I\CHASE\Dr-summ.dwg DWG (dduncon)

STRUCTURE QUANTITIES

ITEM	CONCRETE "A" IN SUBSTR.	CONCRETE "B" IN FOOTING	CONCRETE "C" IN SUPERSTR.	CONCRETE "C" IN RAILING	REINF. STEEL	REINF. STEEL EPOXY COATED	STRUCT. STEEL **	FIELD DRILLED HOLE (STEEL)	SHEAR STUD	THREADED TIE-BAR ASSEMBLIES (PLAIN)	THREADED TIE-BAR ASSEMBLIES (EPOXY C.)	PILES STEEL SHELL 14" ø NO.	PILES STEEL SHELL 14" ø LFT	PILES STEEL H-PILE HP12 x 74 NO.	PILES STEEL H-PILE HP12 x 74 LFT	PILES STEEL H-PILE HP12 x 84 NO.	PILES STEEL H-PILE HP12 x 84 LFT	PVC DRAIN PIPE 6" ø	CAST IRON GRATES, BASINS & FITTINGS	EXPANSION JOINT SEALING SYSTEM	EXPANSION JOINT CLASS "SS"	ELASTOMERIC BEARING ASSEMBLY TYPE I	ELASTOMERIC BEARING ASSEMBLY TYPE II	FIELD DRILLED HOLE IN CONCRETE	STRUCTURAL MEMBERS PRESTRESSED CONC. BOX BEAM TYPE I	STRUCTURAL MEMBERS PRESTRESSED CONC. I-BEAM TYPE I	BARRIER DELINEATOR	SURFACE SEAL (ESTIMATED) **	MASONRY COATING (ESTIMATED) **	FLOWABLE MORTAR	FOUNDATION EXCAVATION UNCLASS	AGGREGATE FOR END BENT BACKFILL	CONCRETE BR. RAILING TRANSITION TYPE TBC	PIPE END BENT DRAIN 6" ø	SLOPEWALL CONCRETE	CONCRETE MEDIAN CURB
	CYS	CYS	CYS	LFT	LBS	LBS	LBS	EACH	EACH	EACH	EACH	NO.	LFT	NO.	LFT	NO.	LFT	LFT	LBS	LFT	LFT	EACH	EACH	EACH	SFT	SFT	EACH	SFT	SFT	CYS	CYS	CYS	EACH	LFT	SFT	LFT
BENT NO. 1			27.3			4853								12	1560													42.5	42.5							
PIER NO. 2	150.2				12081											19	2280											3025	3025							
BENT NO. 3			27.3			4853								12	1560													42.5	42.5							
SUPERSTRUCTURE			749.4			161671																		448		1554		24425	8515							
APPROACHES					8293	3455																		84				3311	705							
GRAND TOTAL	150.2		804		20374	174832								24	3120	19	2280							532		1554		30846	12330							

GUARDRAIL SUMMARY TABLE

LOCATION FROM STATION	LOCATION TO STATION	LEFT	MEDIAN LEFT	MEDIAN RIGHT	RIGHT	W-BEAM GUARDRAIL LENGTH STANDARD POST AT 6'-3" SPA.	STANDARD POST AT 0.952 m SPA.	STANDARD POST AT 0.476 m SPA.	DOUBLE FACED AT 6'-3" SPA.	LONG POST AT 1.905 m SPA.	LONG POST AT 0.952 m SPA.	LONG POST AT 0.476 m SPA.	SHOP CURVED AT 1.905m SPA.	NESTED GUARDRAIL	PEDESTRIAN HANDRAIL	GUARDRAIL TRANSITION TYPE TGB	GUARDRAIL TRANSITION TYPE WGB	GUARDRAIL TRANSITION TYPE GP	GUARDRAIL TRANSITION TYPE VH	GUARDRAIL END TREATMENT MS	GUARDRAIL END TREATMENT OS	GUARDRAIL END TREATMENT TYPE 1	CURVED W-BEAM GUARDRAIL SYSTEM TERMINAL SYSTEM		CURVED W-BEAM GUARDRAIL SYSTEM CONNECTOR SYSTEM		GUARDRAIL REMOVE	GUARDRAIL RESET	REMARKS
						LFT	LFT	LFT	LFT	LFT	LFT	LFT	LFT	LFT		EACH	EACH	EACH	EACH	EACH	EACH	EACH	TYPE	EACH	TYPE	EACH	LFT	LFT	
24+71.09	24+96.09				X	25										1					1								
29+09.19	29+34.19	X				25										1					1								
20+50.00	25+21.00	X													471														
20+25.00	25+21.00				X										496														
27+84.00	35+25.00	X													741														
27+84.00	30+75.00				X										291														
TOTALS						50									1999	2					2								

** THE QUANTITY FOR SURFACE SEAL AND MASONRY COATING IS APPROXIMATE ONLY, AND IT SHALL BE THE CONTRACTOR'S RESPONSIBILITY TO DETERMINE THE QUANTITY ON WHICH HE BASES HIS BID.

REVISIONS	
DATE	REVISION
3-27-03	DELETED STRUCTURAL STEEL NOTE
11/07/03	AS BUILT

RICHARD T. O'CONNOR REGISTERED No. 17778 STATE OF INDIANA PROFESSIONAL ENGINEER

RECOMMENDED FOR APPROVAL Richard T. O'Connor
DESIGN ENGINEER DATE

DESIGNED: SCJ DRAWN: DRD
CHECKED: DOC CHECKED: SCJ

INDIANA DEPARTMENT OF TRANSPORTATION

BRIDGE SUMMARY
CHASE STREET OVER I-80/I-94

HORIZONTAL SCALE	BRIDGE FILE
AS NOTED	I-80-8-5467
VERTICAL SCALE	DESIGNATION
	9709110
SURVEY BOOK	SHEET
	34 of 57
CONTRACT	PROJECT
B-26411	IM-80-1(163)

Time: 9:43:27
Date: 11/12/2003
Scale: 1=1(PS)
Drawing File: 60X020-I\CHASE\br-summ.dwg.DWG (ddunca)

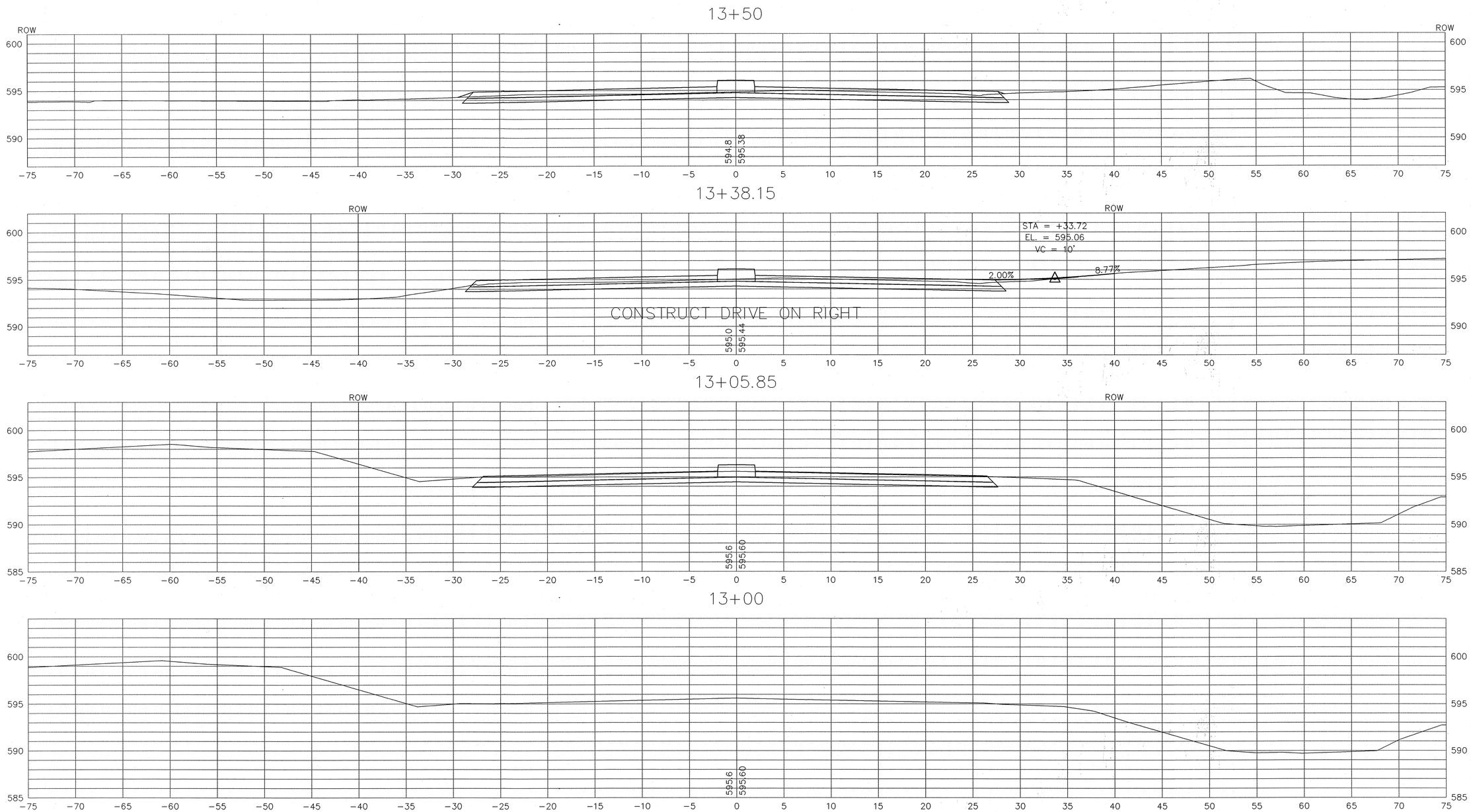

RECOMMENDED FOR APPROVAL _____ DESIGN ENGINEER DATE		INDIANA DEPARTMENT OF TRANSPORTATION	HORIZONTAL SCALE 1"=5' / BRIDGE FILE I-80-8-5467
DESIGNED: SCJ	DRAWN: SCJ	CROSS SECTIONS	VERTICAL SCALE 1"=5' / DESIGNATION 9709110
CHECKED: DOC	CHECKED: DOC	CHASE STREET OVER I-80/I-94	SURVEY BOOK / SHEET 35 of 57
			CONTRACT B-26411 / PROJECT IM-80-1(163)

Time: 13:26:45
Date: 12/9/2002
Scale: 1=5(PS)
Drawing File: Land Projects R2\603020-1\CHASE\x-sec-rev.dwg DWG (sjones)

14+50

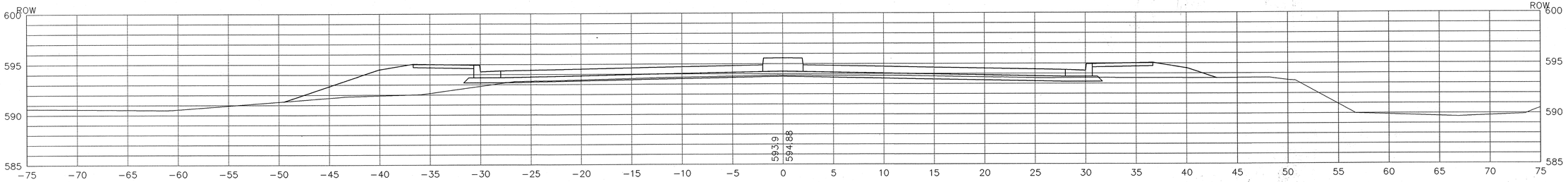

14+00

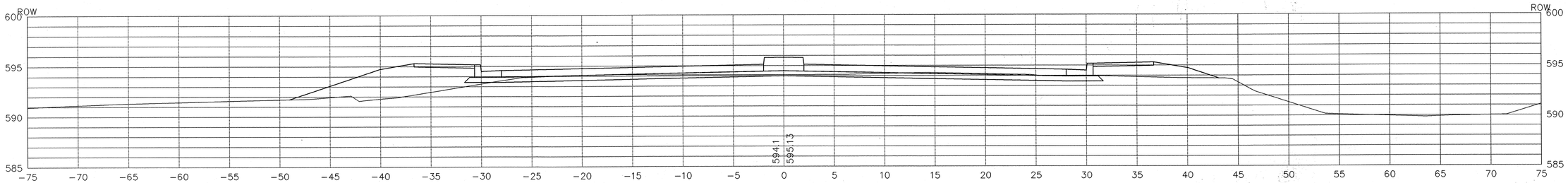

13+60.15

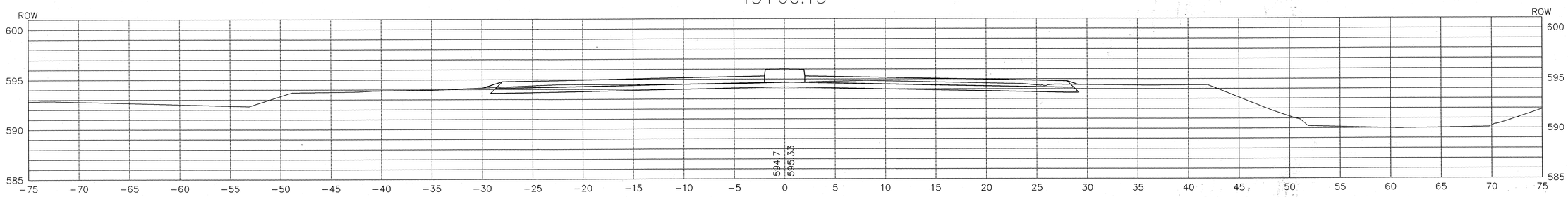

13+55.53

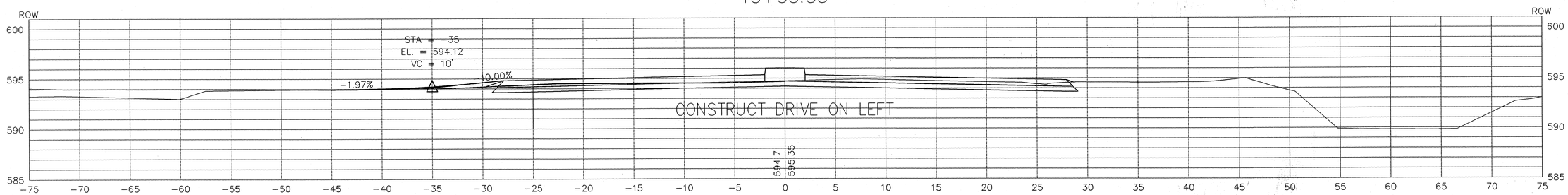

Time: 13:26:45
Date: 12/6/2002
Scale: 1=5(PS)
Drawing File: Land Projects R2\603020-1\CHASE\x-sec-rev.dwg,DWG (gjones)

RECOMMENDED FOR APPROVAL _____ DESIGN ENGINEER DATE

DESIGNED: SCJ DRAWN: SCJ

CHECKED: DOC CHECKED: DOC

INDIANA DEPARTMENT OF TRANSPORTATION

CROSS SECTIONS
CHASE STREET OVER I-80/I-94

HORIZONTAL SCALE	BRIDGE FILE
1"=5'	I-80-8-5467
VERTICAL SCALE	DESIGNATION
1"=5'	9709110
SURVEY BOOK	SHEET
	36 of 57
CONTRACT	PROJECT
B-26411	IM-80-1(163)

16+50

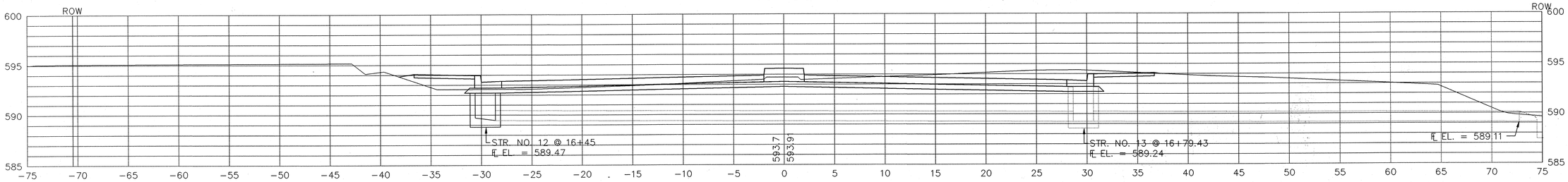

16+00

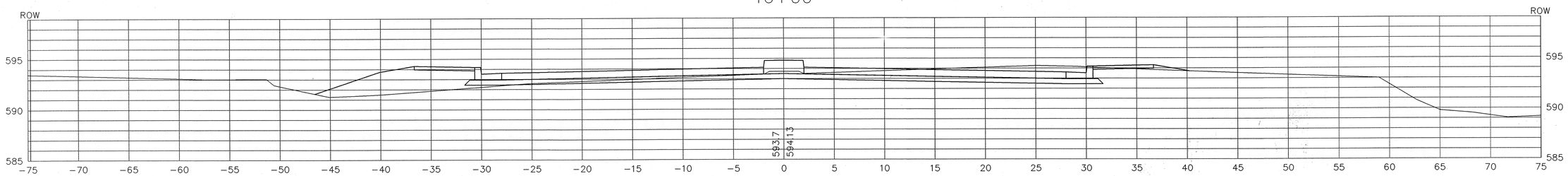

15+50

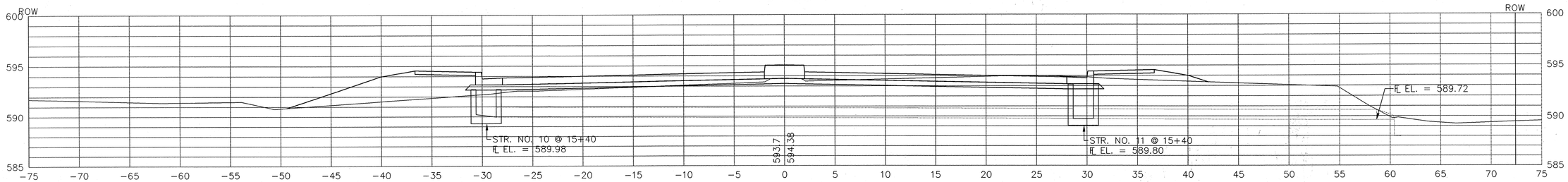

15+00

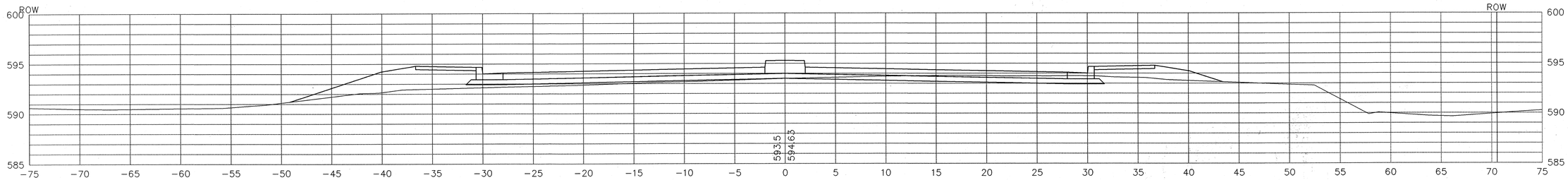

Time: 13:26:45
Date: 12/9/2009
Drawing File: Land Projects P2\603020-1\CHASE\x-sec-rev.dwg DWG (jpones)
Scale: 1=5(FS)

RECOMMENDED FOR APPROVAL _____ DESIGN ENGINEER DATE

DESIGNED: SCJ | DRAWN: SCJ

CHECKED: DOC | CHECKED: DOC

INDIANA DEPARTMENT OF TRANSPORTATION

CROSS SECTIONS
CHASE STREET OVER I-80/I-94

HORIZONTAL SCALE	BRIDGE FILE
1"=5'	I-80-8-5467
VERTICAL SCALE	DESIGNATION
1"=5'	9709110
SURVEY BOOK	SHEET
	37 of 57
CONTRACT	PROJECT
B-26411	IM-80-1(163)

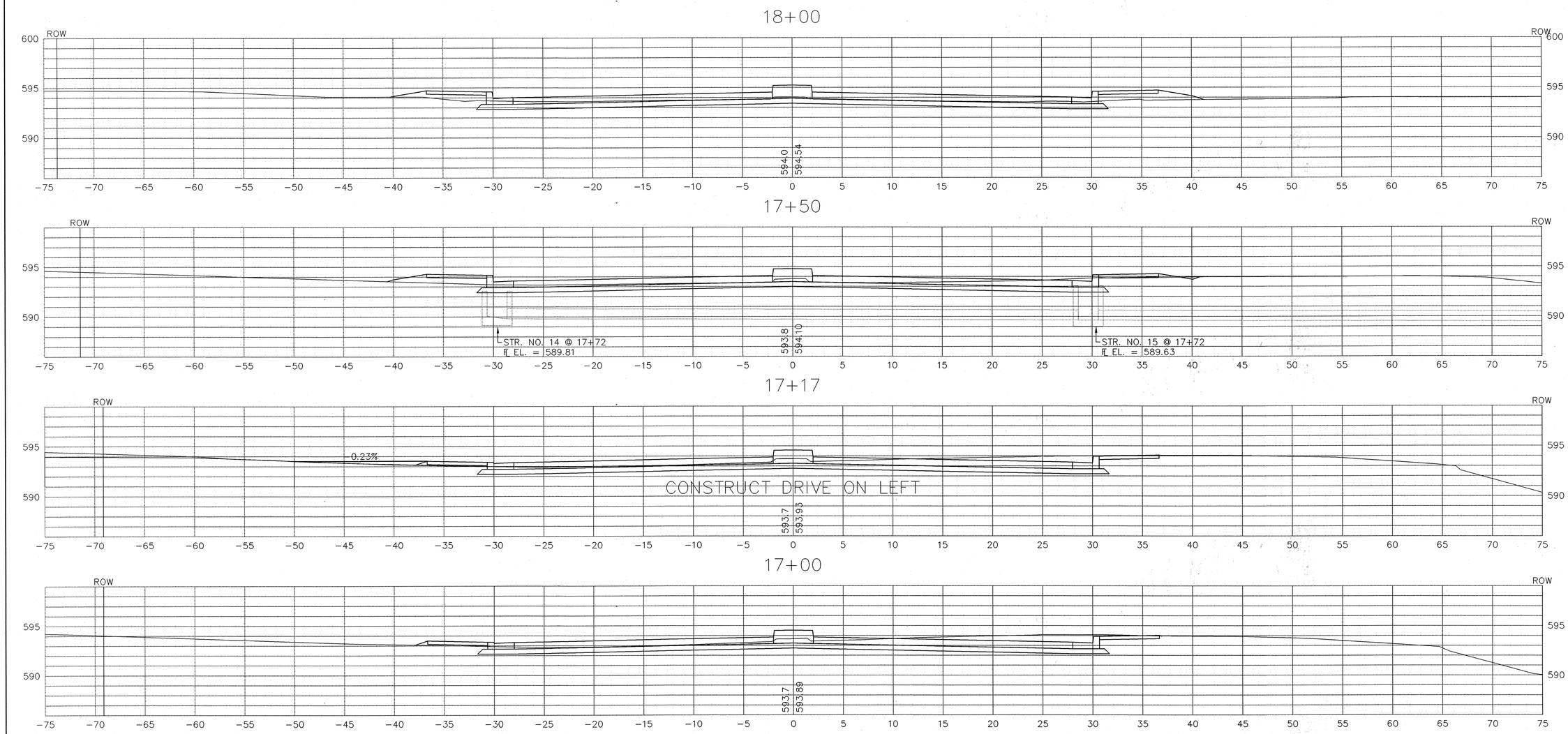

Time: 13:26:45
Date: 12/9/2002
Scale: 1=5(PS)
Drawing File: Land Projects R2\603020-1\CHASE\x-sec-rev.dwg.DWG (sjones)

RECOMMENDED FOR APPROVAL ____ DESIGN ENGINEER DATE		INDIANA DEPARTMENT OF TRANSPORTATION	HORIZONTAL SCALE 1"=5' / BRIDGE FILE I-80-8-5467
DESIGNED: SCJ	DRAWN: SCJ	CROSS SECTIONS	VERTICAL SCALE 1"=5' / DESIGNATION 9709110
CHECKED: DOC	CHECKED: DOC	CHASE STREET OVER I-80/I-94	SURVEY BOOK / SHEET 38 of 57
			CONTRACT B-26411 / PROJECT IM-80-1(163)

19+50

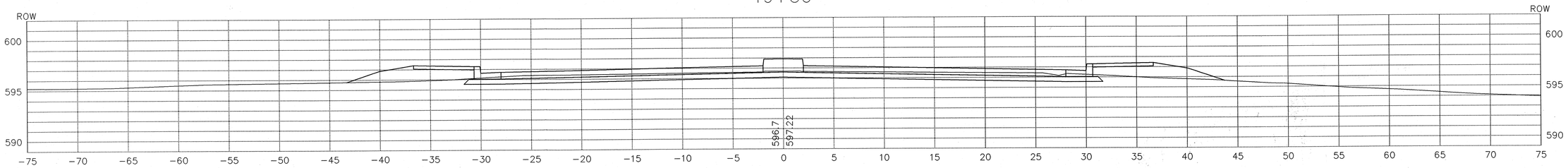

19+39.23

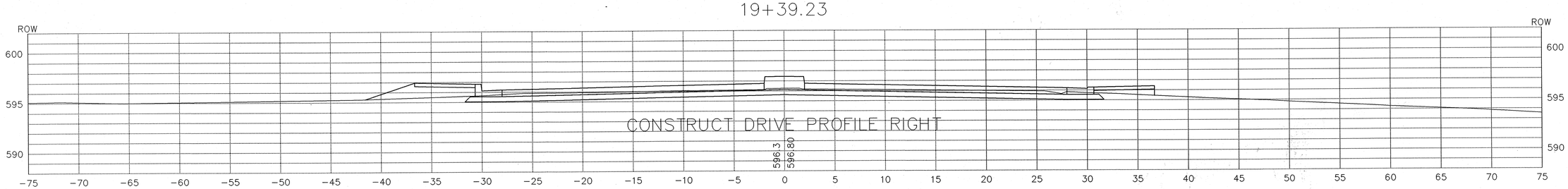

19+00

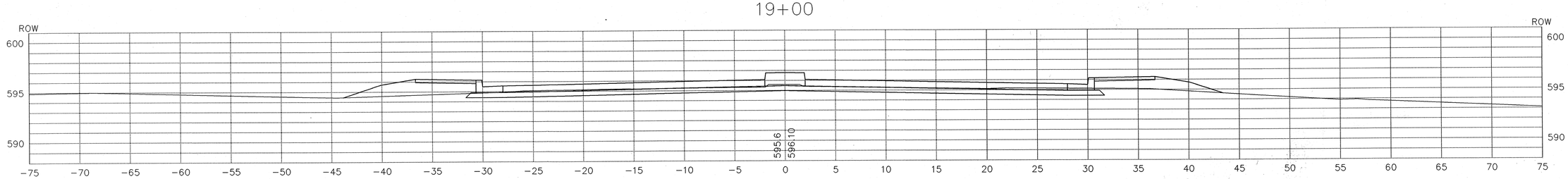

18+50

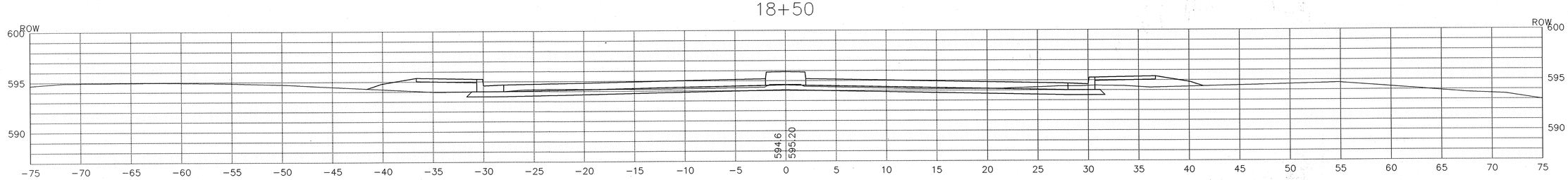

Time: 13:26:45
Date: 12/9/2002
Scale: 1=5(PS)
Drawing File: Land Projects R2\603020-1\CHASE\x-sec-rev.dwg DWG (sjones)

RECOMMENDED FOR APPROVAL _____ DESIGN ENGINEER DATE

DESIGNED: SCJ DRAWN: SCJ

CHECKED: DOC CHECKED: DOC

INDIANA DEPARTMENT OF TRANSPORTATION

CROSS SECTIONS
CHASE STREET OVER I-80/I-94

HORIZONTAL SCALE	BRIDGE FILE
1"=5'	I-80-8-5467
VERTICAL SCALE	DESIGNATION
1"=5'	9709110
SURVEY BOOK	SHEET
	39 of 57
CONTRACT	PROJECT
B-26411	IM-80-1(163)

21+00

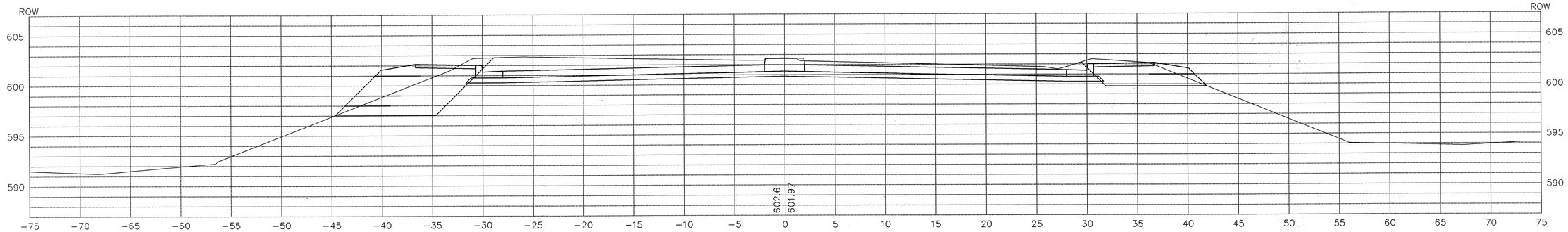

20+50

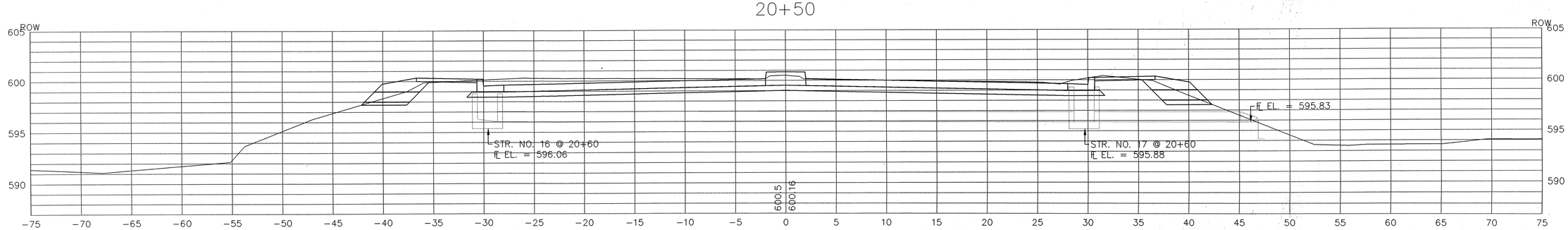

20+03.61

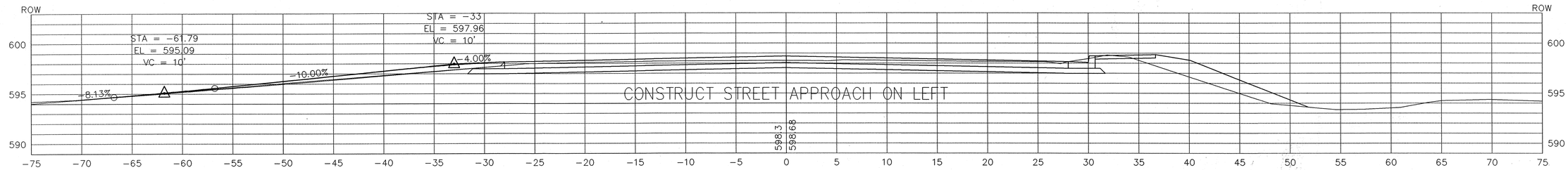

20+00

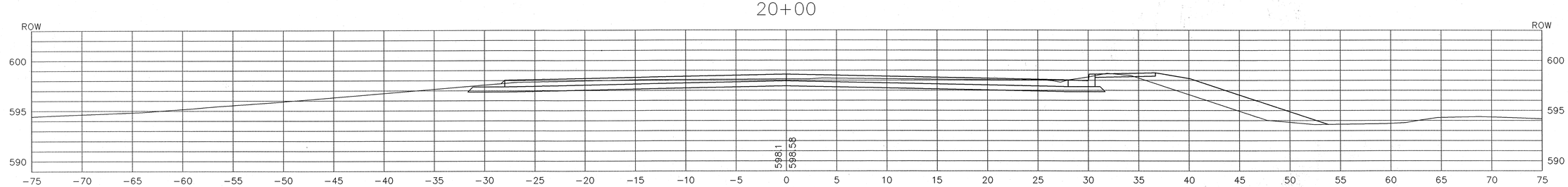

Time: 13:26:45
Date: 11/20/2002
Scale: 1=5(PS)
Drawing File: Land Projects R2\603020-1\CHASE\x-sec-rev.dwg DWG (jones)

RECOMMENDED FOR APPROVAL _____ DESIGN ENGINEER DATE

DESIGNED: SCJ DRAWN: SCJ

CHECKED: DOC CHECKED: DOC

INDIANA DEPARTMENT OF TRANSPORTATION

CROSS SECTIONS
CHASE STREET OVER I-80/I-94

HORIZONTAL SCALE	BRIDGE FILE
1"=5'	I-80-8-5467
VERTICAL SCALE	DESIGNATION
1"=5'	9709110
SURVEY BOOK	SHEET
	40 of 57
CONTRACT	PROJECT
B-26411	IM-80-1(163)

22+50

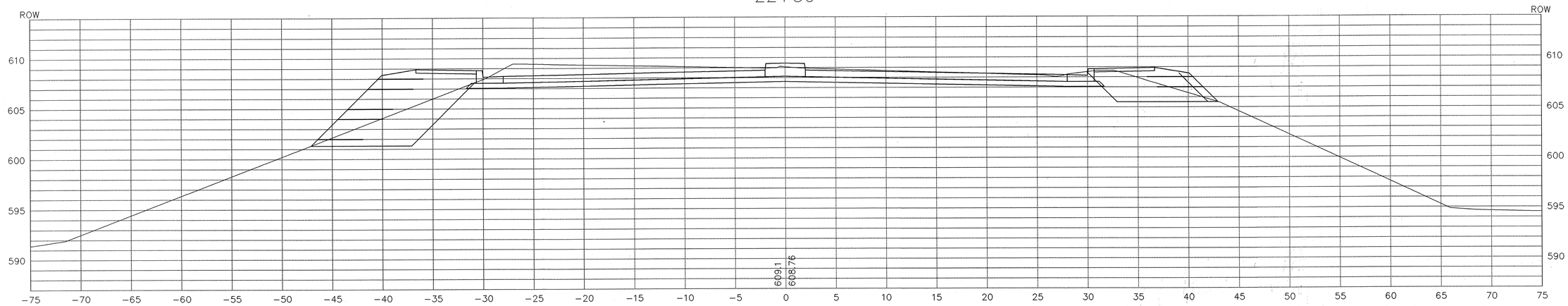

22+00

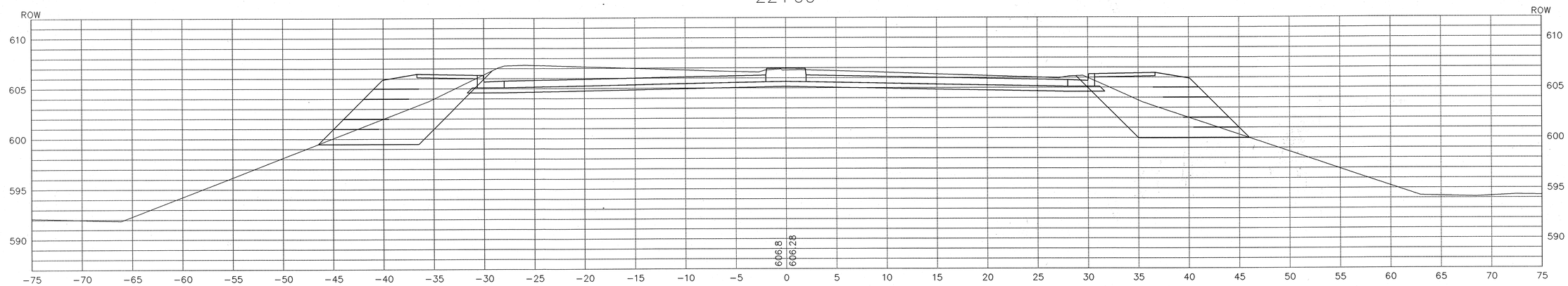

21+50

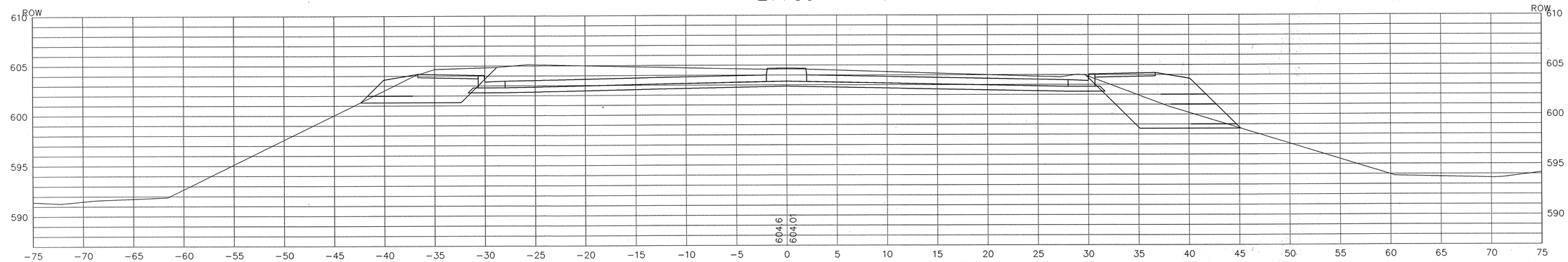

RECOMMENDED FOR APPROVAL _____ DESIGN ENGINEER DATE

DESIGNED: SCJ DRAWN: SCJ

CHECKED: DOC CHECKED: DOC

INDIANA DEPARTMENT OF TRANSPORTATION

CROSS SECTIONS
CHASE STREET OVER I-80/I-94

HORIZONTAL SCALE	BRIDGE FILE
1"=5'	I-80-8-5467
VERTICAL SCALE	DESIGNATION
1"=5'	9709110
SURVEY BOOK	SHEET
	41 of 57
CONTRACT	PROJECT
B-26411	IM-80-1(163)

Time: 13:26:45
Date: 12/8/2009
Scale: 1=5(PS)
Drawing File: Land Projects R2\603020-1\CHASE\x-sec-rev.dwg DWG (sjones)

23+50

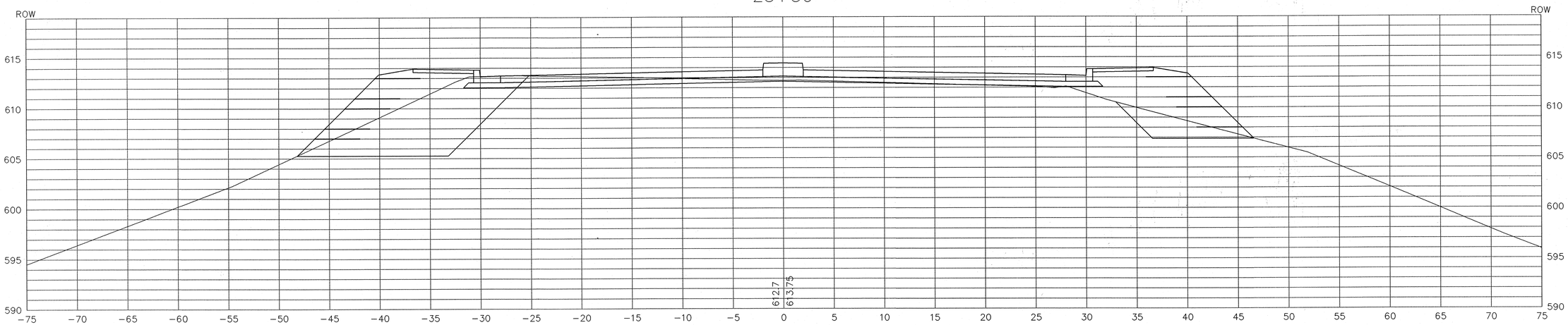

23+00

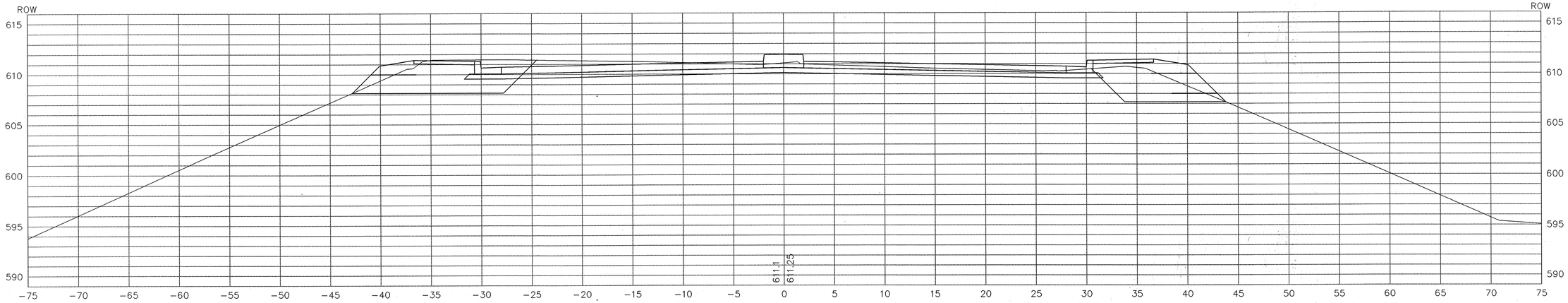

RECOMMENDED FOR APPROVAL _____ DESIGN ENGINEER DATE

DESIGNED: SCJ DRAWN: SCJ

CHECKED: DOC CHECKED: DOC

INDIANA DEPARTMENT OF TRANSPORTATION

CROSS SECTIONS
CHASE STREET OVER I-80/I-94

HORIZONTAL SCALE	BRIDGE FILE
1"=5'	I-80-8-5467
VERTICAL SCALE	DESIGNATION
1"=5'	9709110
SURVEY BOOK	SHEET
	42 of 57
CONTRACT	PROJECT
B-26411	IM-80-1(163)

Time: 13:26:45
Date: 1/29/2009
Scale: 1=5(PS)
Drawing File: Land Projects R2\60302D-1\CHASEly-sec-rev.dwg DWG (sjones)

24+50

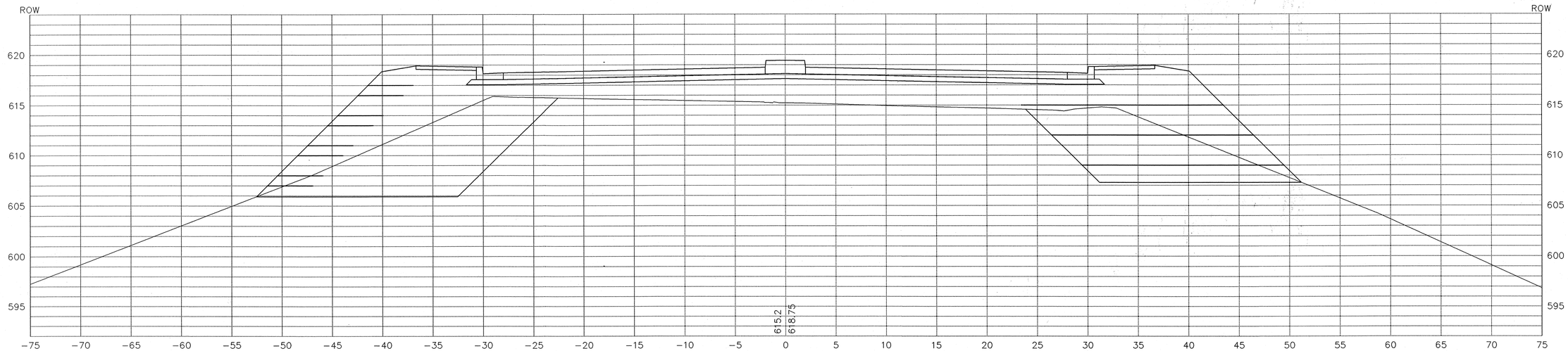

24+00

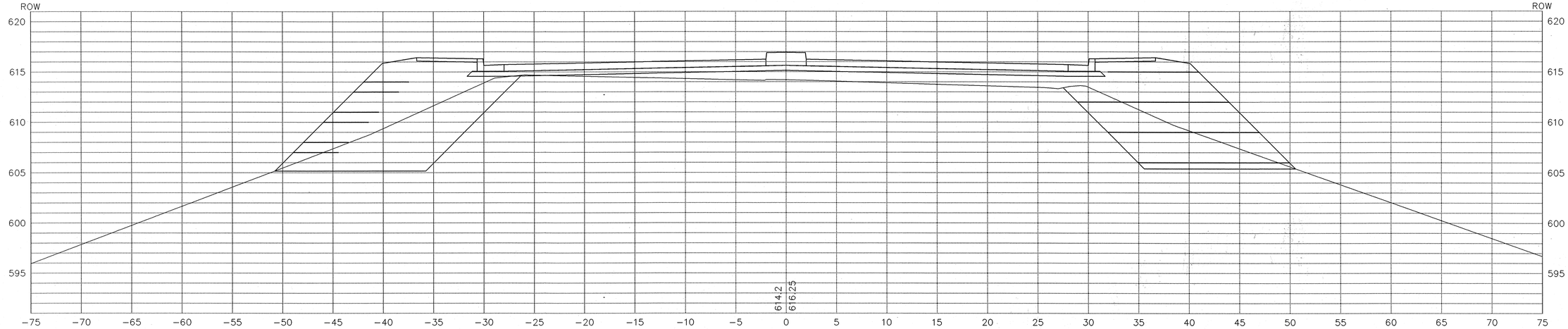

Time: 13:26:45
Date: 12/9/2002
Scale: 1=5(PS)
Drawing File: Land Projects R2\603020-1\CHASE\x-sec-rev.dwg.DWG (sjones)

RECOMMENDED FOR APPROVAL _____ DESIGN ENGINEER DATE		INDIANA DEPARTMENT OF TRANSPORTATION	HORIZONTAL SCALE 1"=5' / BRIDGE FILE I-80-8-5467
DESIGNED: SCJ	DRAWN: SCJ	CROSS SECTIONS CHASE STREET OVER I-80/I-94	VERTICAL SCALE 1"=5' / DESIGNATION 9709110
CHECKED: DOC	CHECKED: DOC		SURVEY BOOK / SHEET 43 of 57
			CONTRACT B-26411 / PROJECT IM-80-1(163)

25+20.46

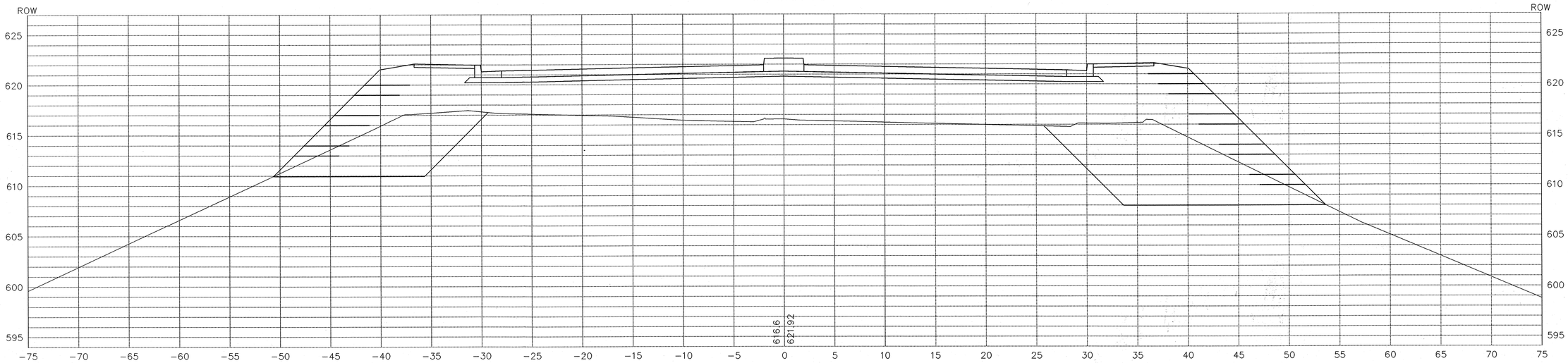

25+00

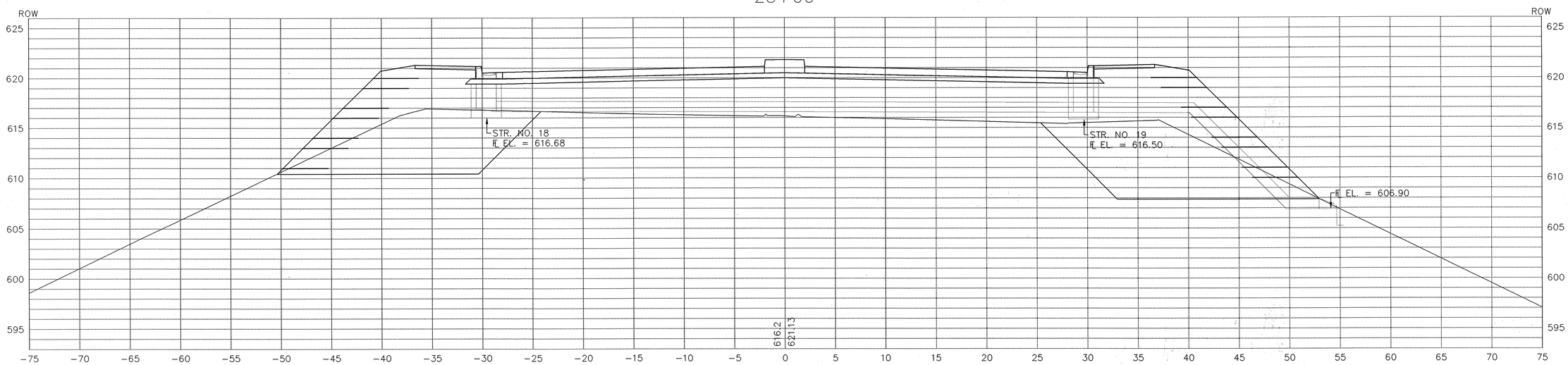

RECOMMENDED FOR APPROVAL _____ DESIGN ENGINEER DATE

DESIGNED: SCJ | DRAWN: SCJ

CHECKED: DOC | CHECKED: DOC

INDIANA DEPARTMENT OF TRANSPORTATION

CROSS SECTIONS
CHASE STREET OVER I-80/I-94

HORIZONTAL SCALE	BRIDGE FILE
1"=5'	I-80-8-5467
VERTICAL SCALE	DESIGNATION
1"=5'	9709110
SURVEY BOOK	SHEET
	44 of 57
CONTRACT	PROJECT
B-26411	IM-80-1(163)

Time: 13:26:45
Date: 11/21/2002
Scale: 1=2(PS)
Drawing File: Land Projects R2\603020-1\CHASE\v-sec-rev.dwg\DWG (sjones)

25+50

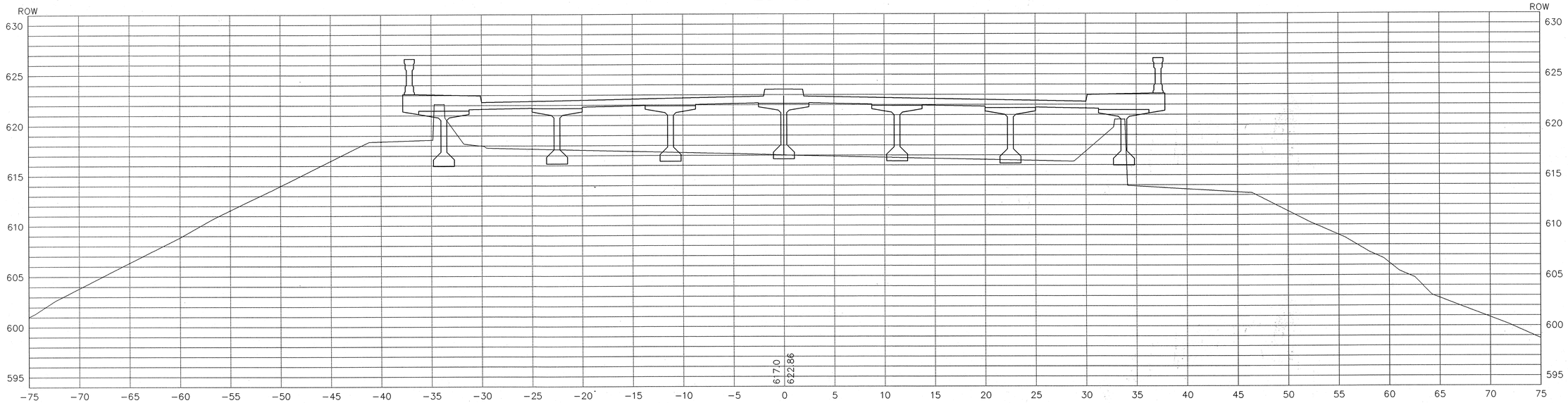

25+40

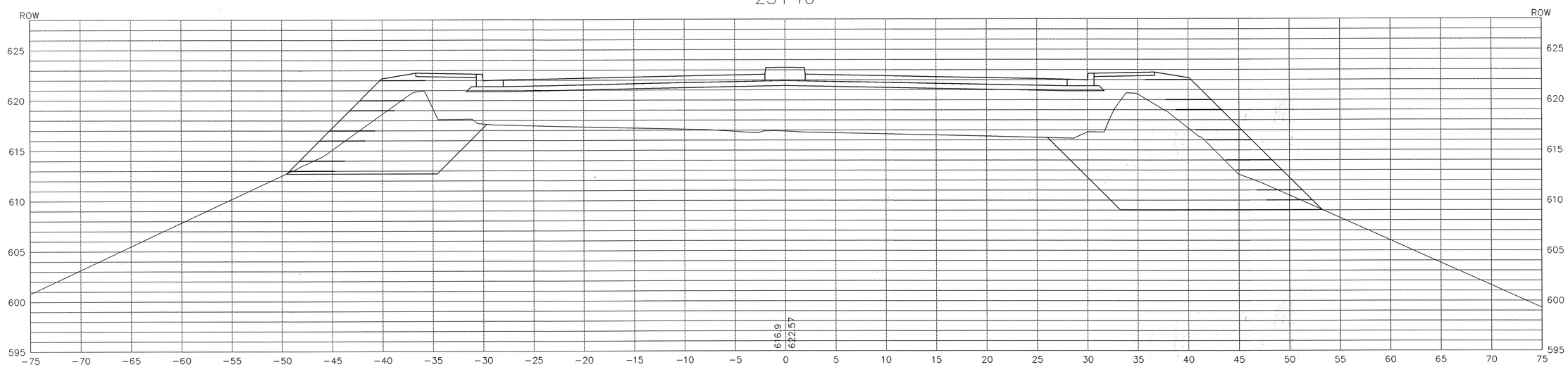

Time: 13:26:45
Date: 11/20/2002
Scale: 1=#(PS)
Drawing File: Land Projects R2\603020-1\CHASE\x-sec-rev.dwg DWG (gjones)

RECOMMENDED FOR APPROVAL _____ DESIGN ENGINEER DATE

DESIGNED: SCJ | DRAWN: SCJ
CHECKED: DOC | CHECKED: DOC

INDIANA DEPARTMENT OF TRANSPORTATION

CROSS SECTIONS
CHASE STREET OVER I-80/I-94

HORIZONTAL SCALE	BRIDGE FILE
1"=5'	I-80-8-5467
VERTICAL SCALE	DESIGNATION
1"=5'	9709110
SURVEY BOOK	SHEET
	45 of 57
CONTRACT	PROJECT
B-26411	IM-80-1(163)

26+50

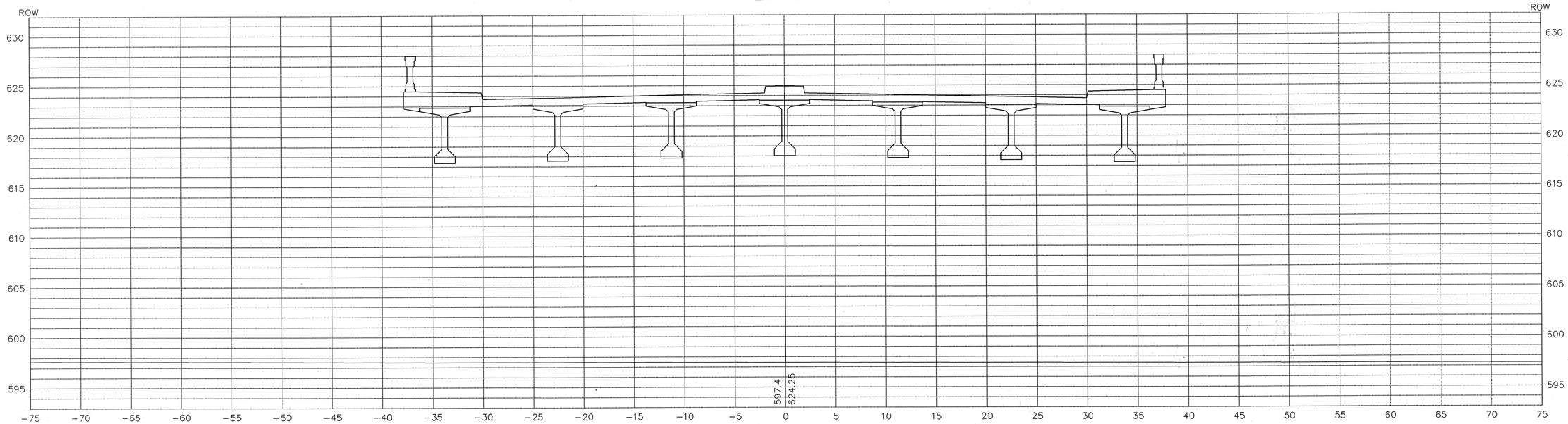

26+00

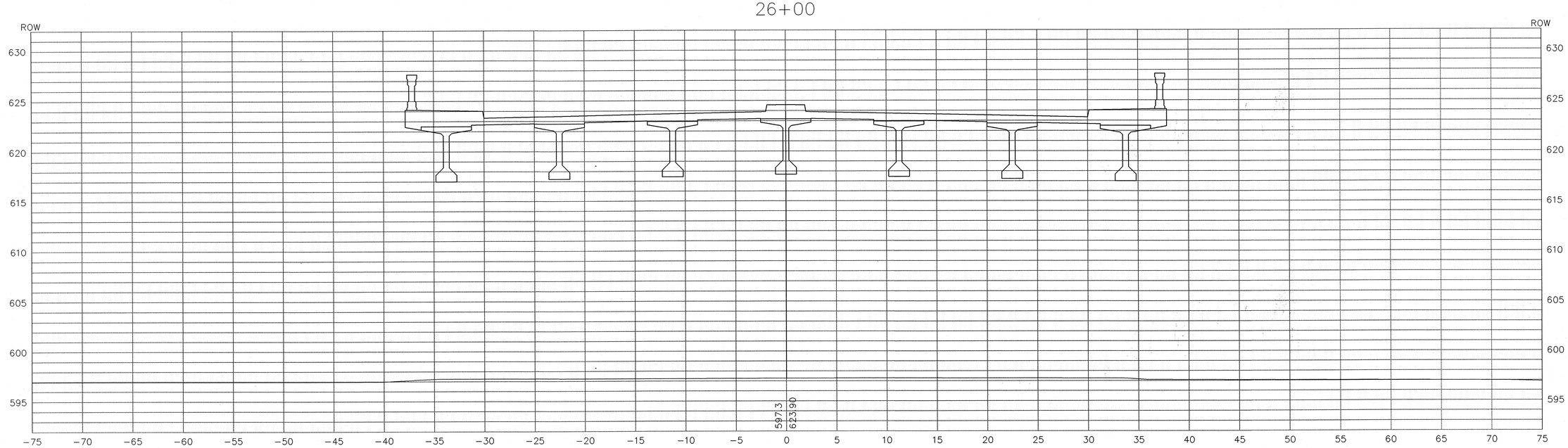

RECOMMENDED FOR APPROVAL _____ DESIGN ENGINEER DATE

DESIGNED: SCJ | DRAWN: SCJ

CHECKED: DOC | CHECKED: DOC

INDIANA DEPARTMENT OF TRANSPORTATION

CROSS SECTIONS
CHASE STREET OVER I-80/I-94

HORIZONTAL SCALE	BRIDGE FILE
1"=5'	I-80-8-5467
VERTICAL SCALE	DESIGNATION
1"=5'	9709110
SURVEY BOOK	SHEET
	46 of 57
CONTRACT	PROJECT
B-26411	IM-80-1(163)

Time: 13:26:46
Date: 11/20/2002
Scale: 1=5(PS)
Drawing File: Land Projects R2\603020-1\CHASE\v-sec-rev.dwg DWG (sjones)

27+50

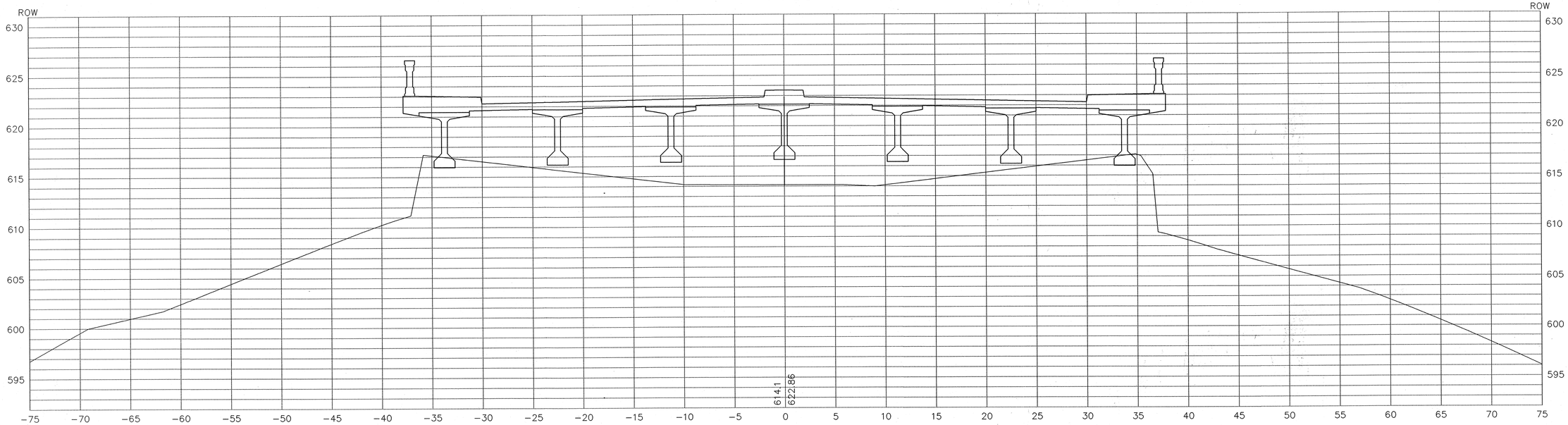

27+00

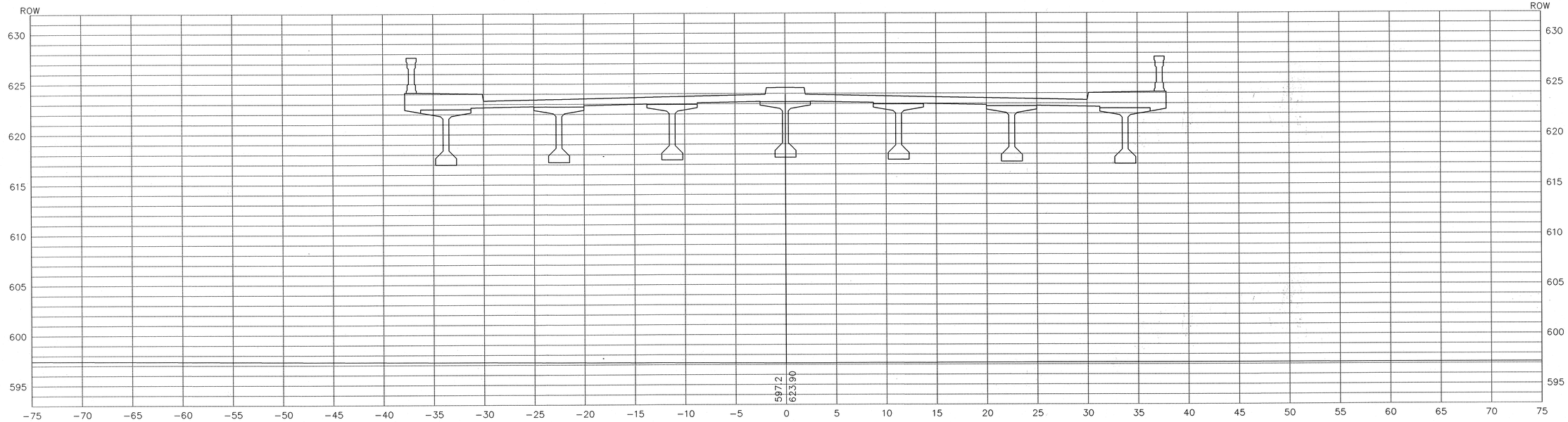

Time: 13:26:45
Date: 12/9/2002
Scale: 1=5(PS)
Drawing File: Land Projects R2\603020-1\CHASE\x-sec-rev.dwg DWG (sjones)

RECOMMENDED FOR APPROVAL _____ DESIGN ENGINEER DATE		INDIANA DEPARTMENT OF TRANSPORTATION	HORIZONTAL SCALE 1"=5' / BRIDGE FILE I-80-8-5467
DESIGNED: SCJ	DRAWN: SCJ	CROSS SECTIONS CHASE STREET OVER I-80/I-94	VERTICAL SCALE 1"=5' / DESIGNATION 9709110
CHECKED: DOC	CHECKED: DOC		SURVEY BOOK / SHEET 47 of 57
			CONTRACT B-26411 / PROJECT IM-80-1(163)

27+87.03

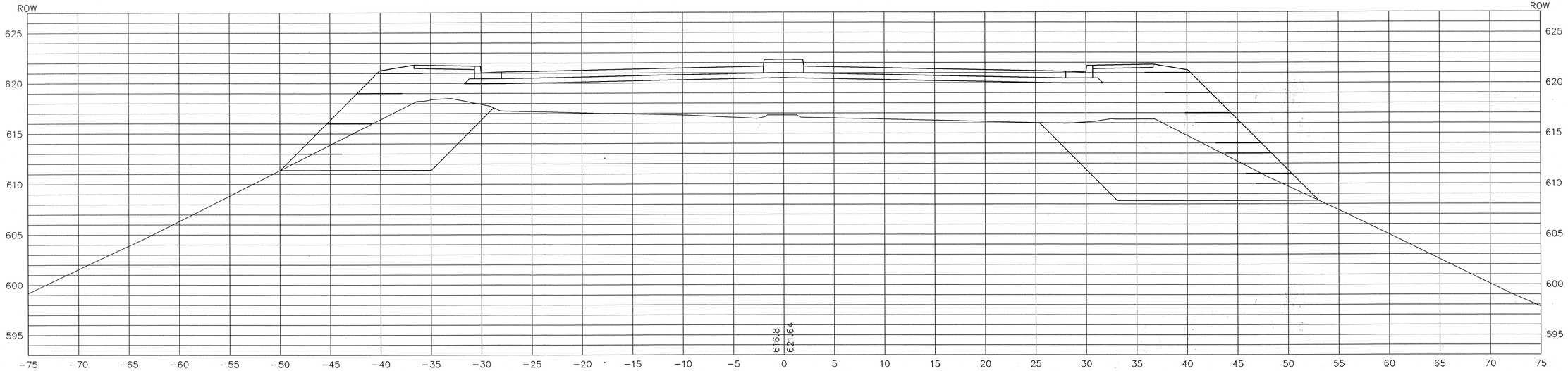

27+70

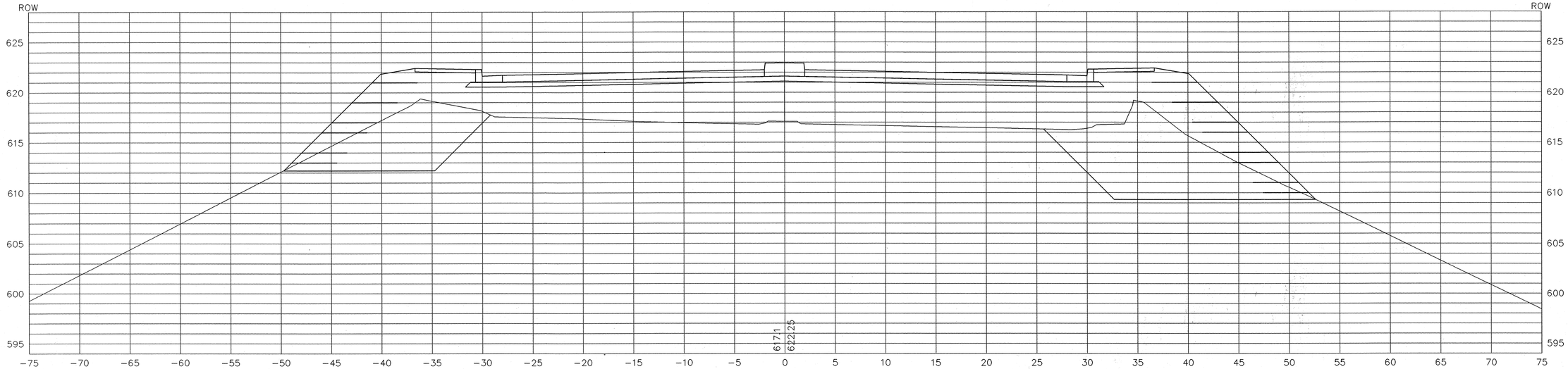

RECOMMENDED FOR APPROVAL _____ DESIGN ENGINEER DATE

DESIGNED: SCJ DRAWN: SCJ

CHECKED: DOC CHECKED: DOC

INDIANA DEPARTMENT OF TRANSPORTATION

CROSS SECTIONS
CHASE STREET OVER I-80/I-94

HORIZONTAL SCALE	BRIDGE FILE
1"=5'	I-80-8-5467
VERTICAL SCALE	DESIGNATION
1"=5'	9709110
SURVEY BOOK	SHEET
	48 of 57
CONTRACT	PROJECT
B-26411	IM-80-1(163)

Time: 13:26:45
Date: 11/21/2002
Scale: 1=2(PS)
Drawing File: Land Projects RZ\603020-1\CHASE\v-sec-rev.dwg DWG (sjones)

28+50

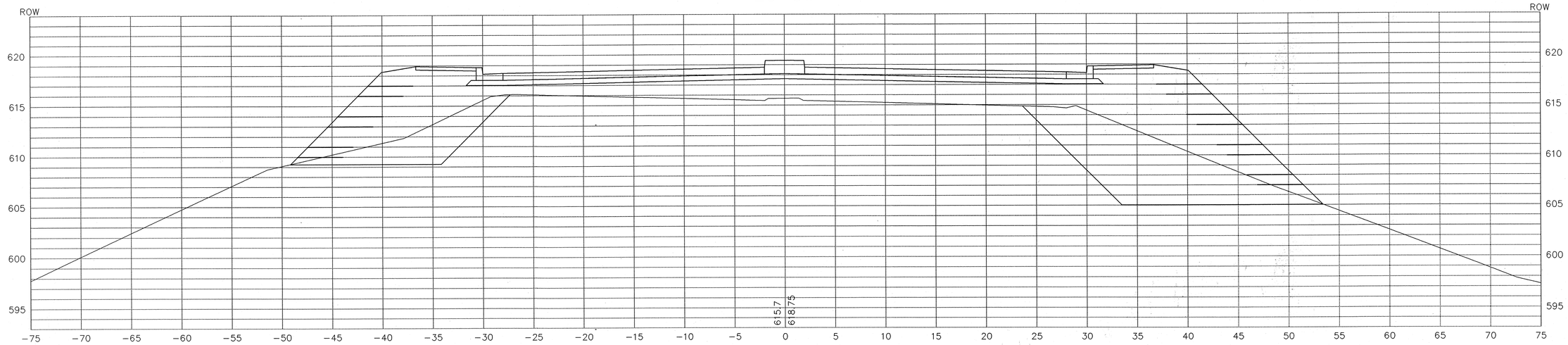

28+00

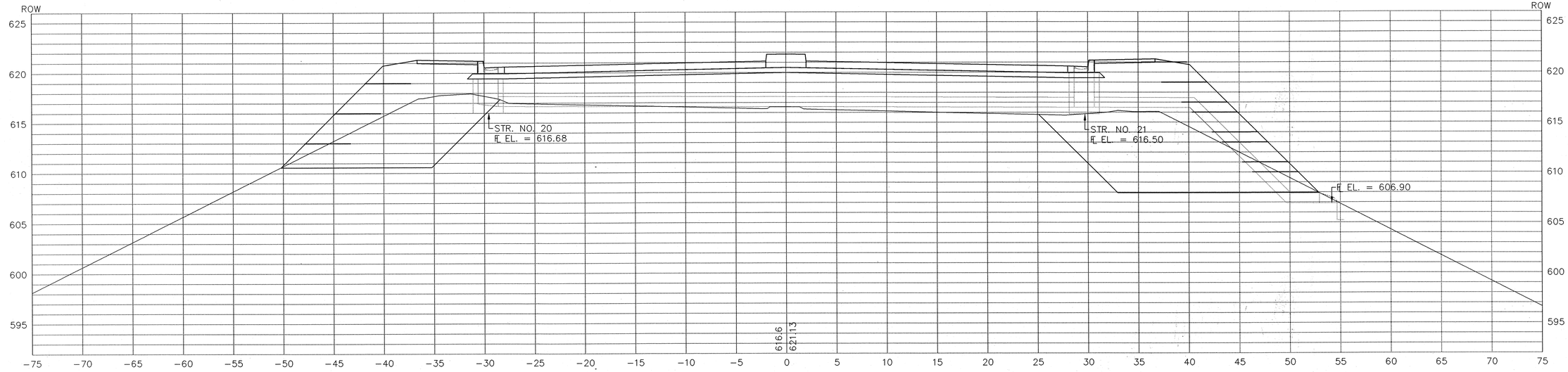

RECOMMENDED FOR APPROVAL _____ DESIGN ENGINEER DATE

DESIGNED: SCJ DRAWN: SCJ

CHECKED: DOC CHECKED: DOC

INDIANA DEPARTMENT OF TRANSPORTATION

CROSS SECTIONS
CHASE STREET OVER I-80/I-94

HORIZONTAL SCALE	BRIDGE FILE
1"=5'	I-80-8-5467
VERTICAL SCALE	DESIGNATION
1"=5'	9709110
SURVEY BOOK	SHEET
	49 of 57
CONTRACT	PROJECT
B-26411	IM-80-1(163)

Time: 13:26:45
Date: 1/9/2002
Scale: 1=5(PS)
Drawing File: Land Projects P2\603020-1\CHASE\v-sec-rev.dwg DWG (gjones)

29+50

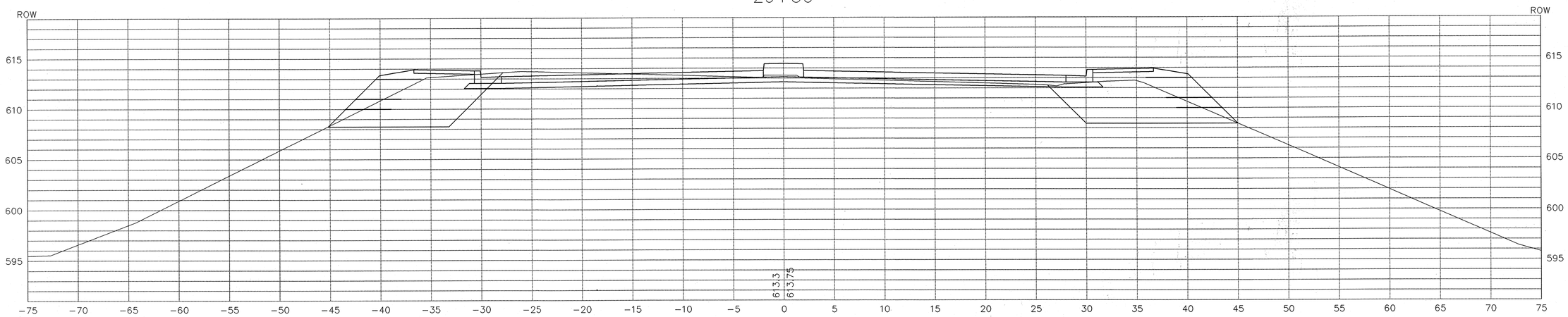

29+00

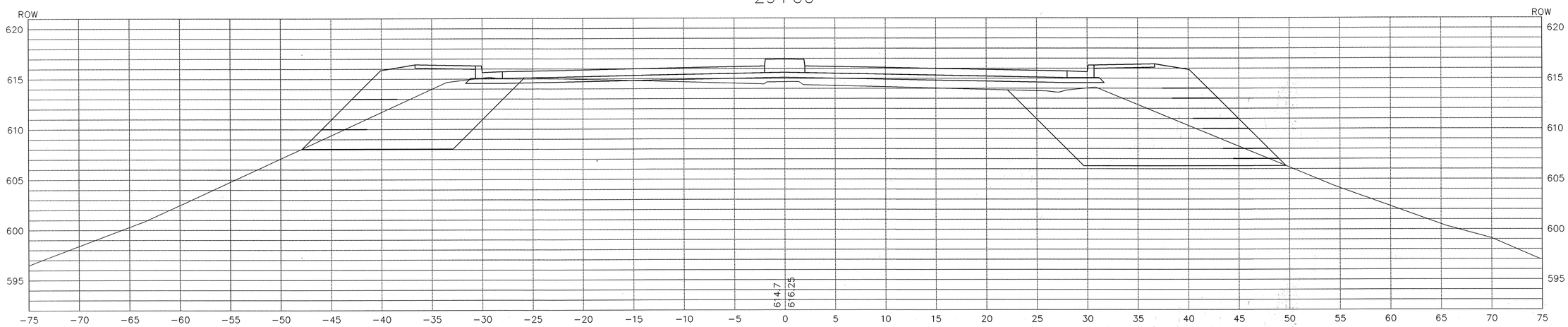

Time: 13:26:45
Date: 12/9/2002
Scale: 1=5(PS)
Drawing File: Land Projects R2\603020-1\CHASE\x-sec-rev.dwg DWG (gpines)

RECOMMENDED FOR APPROVAL _____ DESIGN ENGINEER DATE

DESIGNED: SCJ | DRAWN: SCJ

CHECKED: DOC | CHECKED: DOC

INDIANA DEPARTMENT OF TRANSPORTATION

CROSS SECTIONS
CHASE STREET OVER I-80/I-94

HORIZONTAL SCALE	BRIDGE FILE
1"=5'	I-80-8-5467
VERTICAL SCALE	DESIGNATION
1"=5'	9709110
SURVEY BOOK	SHEET
	50 of 57
CONTRACT	PROJECT
B-26411	IM-80-1(163)

31+00

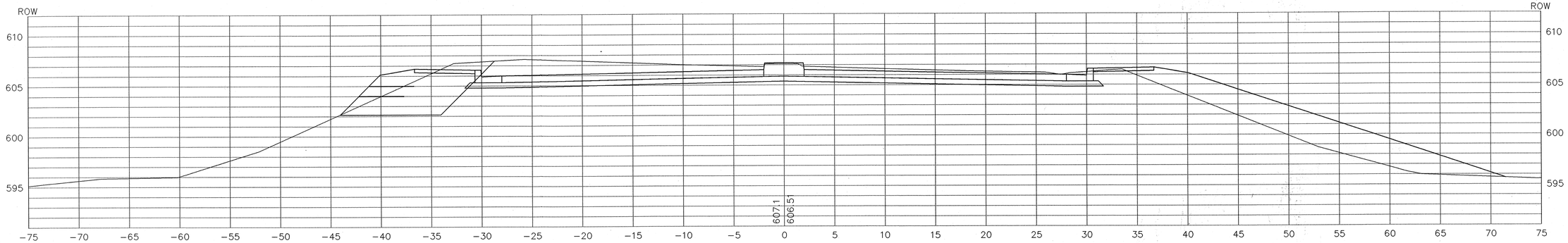

30+50

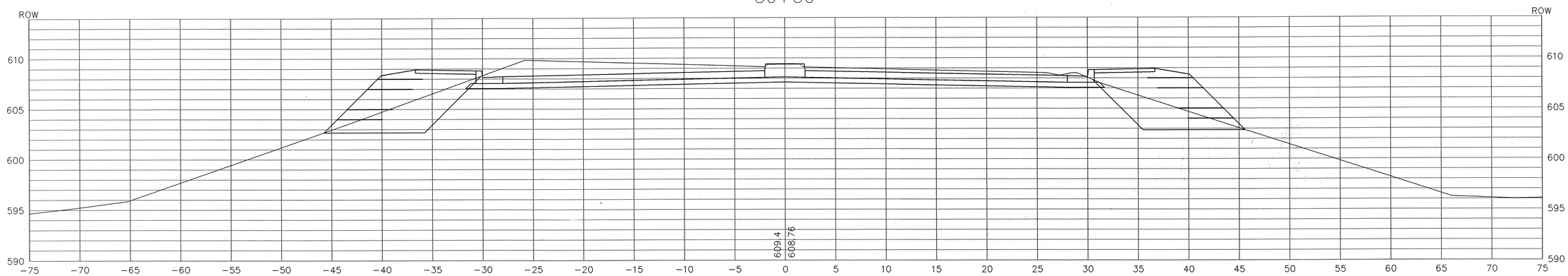

30+00

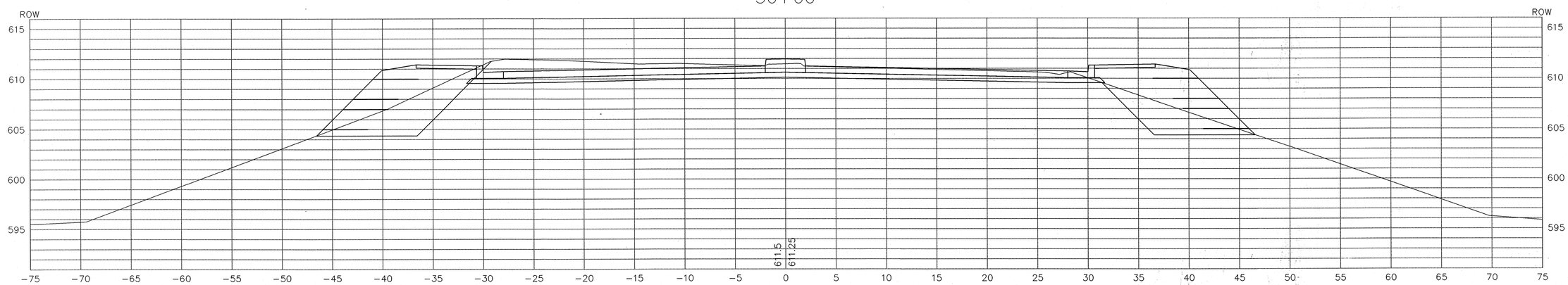

Time: 13:26:45
Date: 12/9/2002
Scale: 1=5(PS)
Drawing File: Land Projects R2\603020-1\CHASE\x-sec-rev.dwg DWG (sjones)

RECOMMENDED FOR APPROVAL _____ DESIGN ENGINEER DATE		INDIANA DEPARTMENT OF TRANSPORTATION	HORIZONTAL SCALE 1"=5' / BRIDGE FILE I-80-8-5467
DESIGNED: SCJ	DRAWN: SCJ	CROSS SECTIONS CHASE STREET OVER I-80/I-94	VERTICAL SCALE 1"=5' / DESIGNATION 9709110
CHECKED: DOC	CHECKED: DOC		SURVEY BOOK / SHEET 51 of 57
			CONTRACT B-26411 / PROJECT IM-80-1(163)

33+00

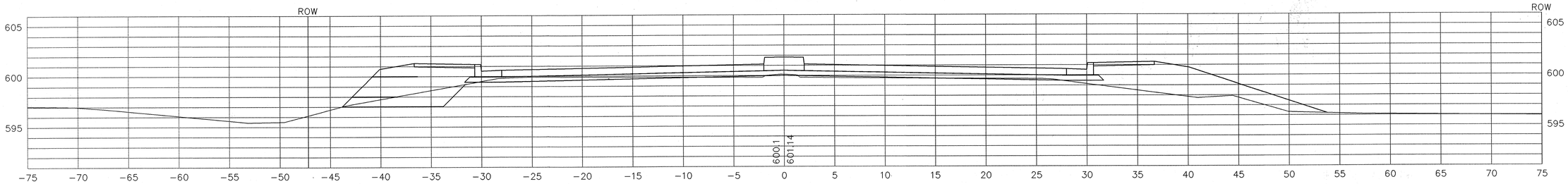

32+50

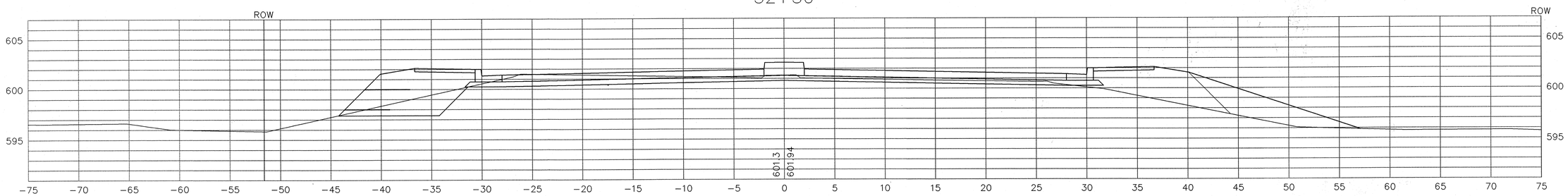

32+00

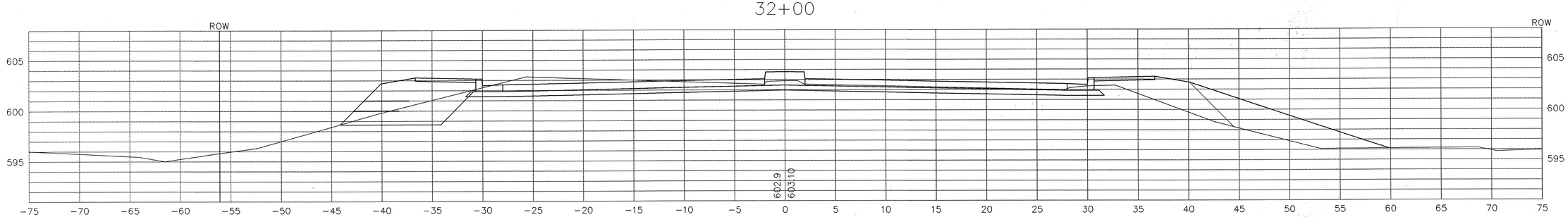

31+50

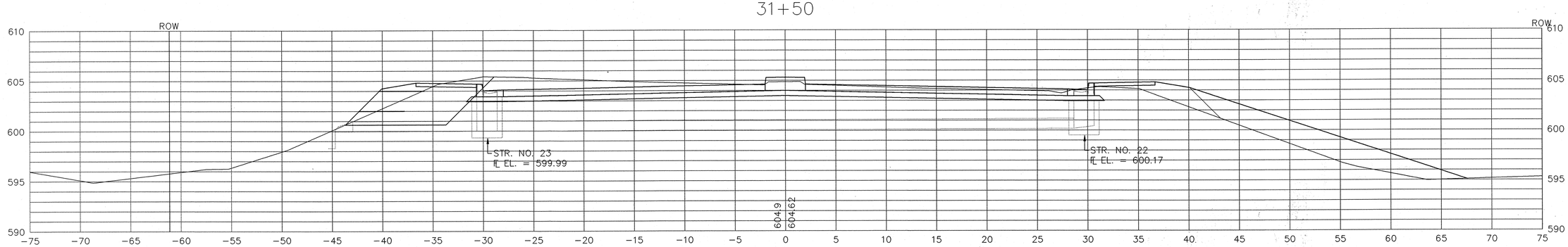

RECOMMENDED FOR APPROVAL _____ DESIGN ENGINEER DATE

DESIGNED: SCJ DRAWN: SCJ

CHECKED: DOC CHECKED: DOC

INDIANA DEPARTMENT OF TRANSPORTATION

CROSS SECTIONS
CHASE STREET OVER I-80/I-94

HORIZONTAL SCALE	BRIDGE FILE
1"=5'	I-80-8-5467
VERTICAL SCALE	DESIGNATION
1"=5'	9709110
SURVEY BOOK	SHEET
	52 of 57
CONTRACT	PROJECT
B-26411	IM-80-1(163)

Time: 13:26:45
Date: 11/06/2002
Scale: 1=5(PS)
Drawing File: Land Projects R2\60320-1\CHASE\x-sec-rev.dwg.DWG (gjones)

34+50

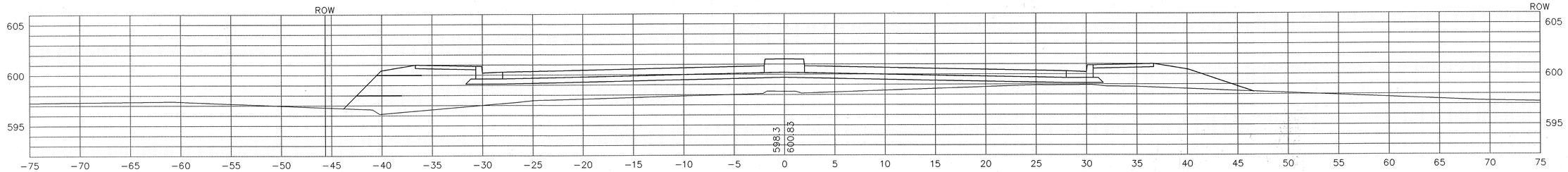

34+00

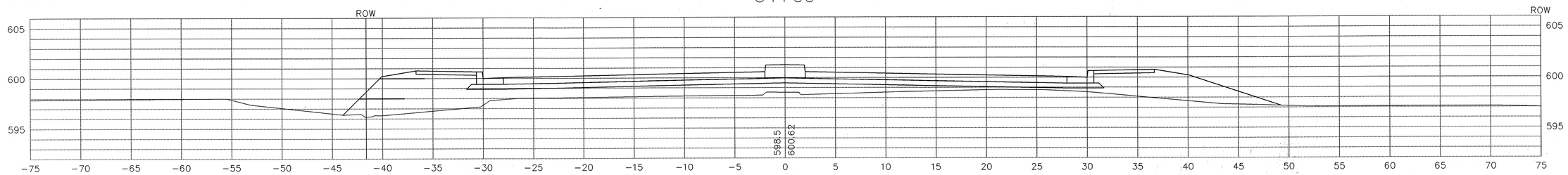

33+85.45

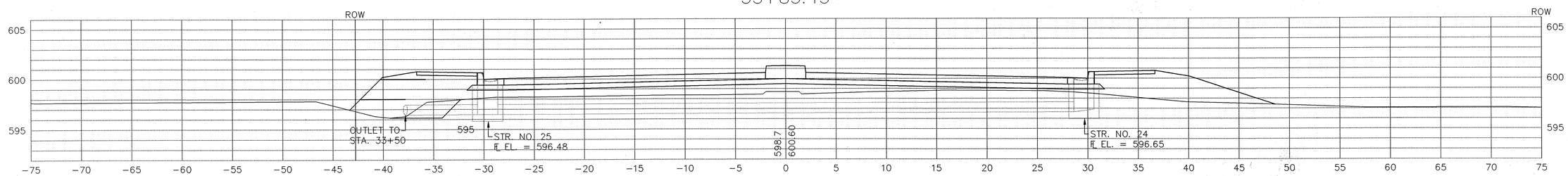

33+50

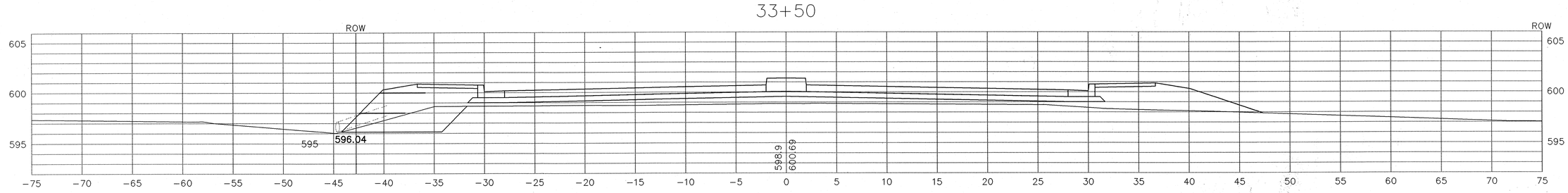

RECOMMENDED FOR APPROVAL _____ DESIGN ENGINEER DATE

DESIGNED: SCJ DRAWN: SCJ

CHECKED: DOC CHECKED: DOC

INDIANA DEPARTMENT OF TRANSPORTATION

CROSS SECTIONS
CHASE STREET OVER I-80/I-94

HORIZONTAL SCALE	BRIDGE FILE
1"=5'	I-80-8-5467
VERTICAL SCALE	DESIGNATION
1"=5'	9709110
SURVEY BOOK	SHEET
	53 of 57
CONTRACT	PROJECT
B-26411	IM-80-1(163)

Time: 13:26:45
Date: 12/8/2009
Scale: 1=5(PS)
Drawing File: Land Projects R2\603020-1\CHASE\x-sec-rev.dwg DWG (gjones)

36+50

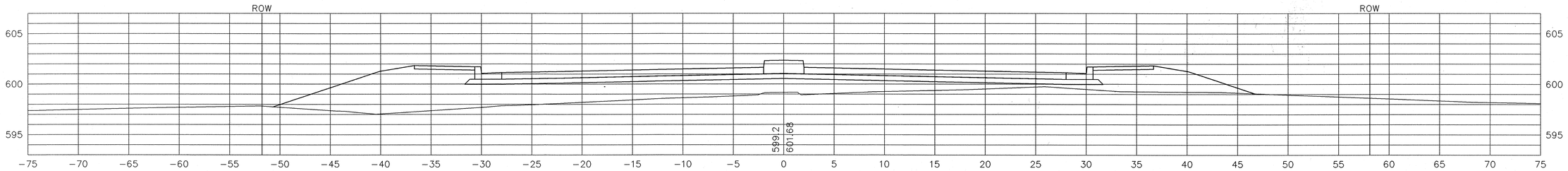

36+00

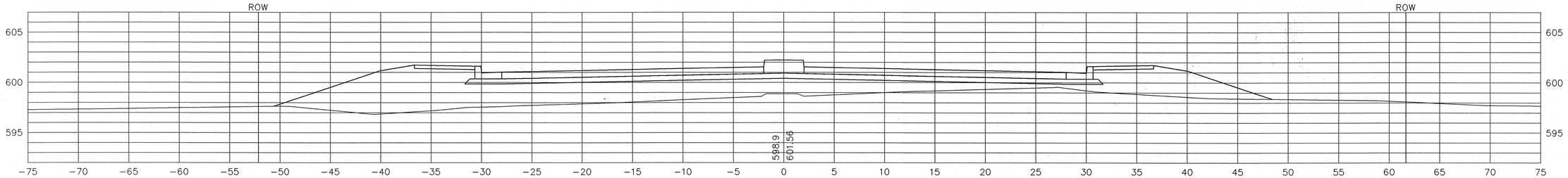

35+50

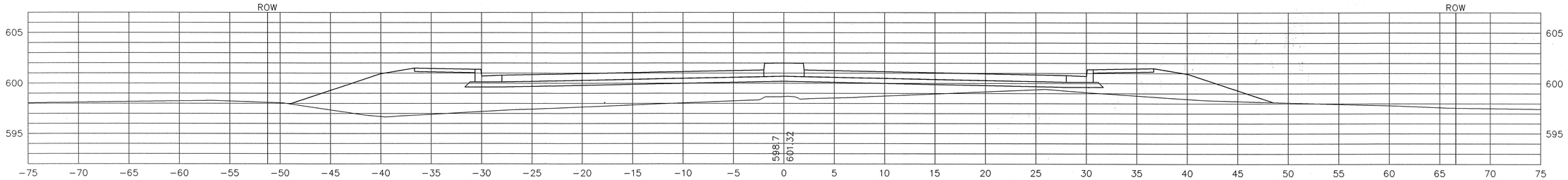

35+00

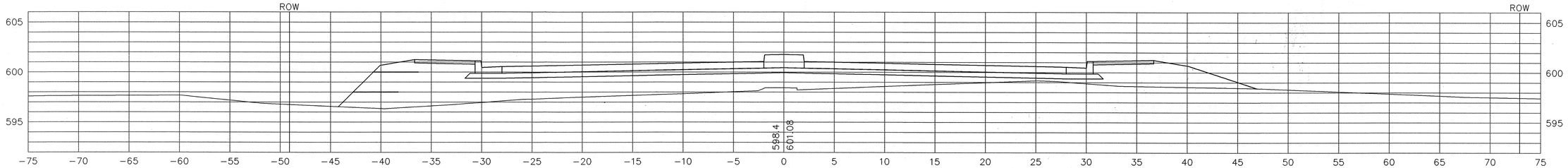

Time: 13:30:45
Date: 12/9/2002
Scale: 1=5(PS)
Drawing File: Land Projects R2\003020-1\CHASE\x-sec-rev.dwg.DWG (sjones)

RECOMMENDED FOR APPROVAL _____ DESIGN ENGINEER DATE

DESIGNED: SCJ
DRAWN: SCJ
CHECKED: DOC
CHECKED: DOC

INDIANA
DEPARTMENT OF TRANSPORTATION

CROSS SECTIONS
CHASE STREET OVER I-80/I-94

HORIZONTAL SCALE	BRIDGE FILE
1"=5'	I-80-8-5467
VERTICAL SCALE	DESIGNATION
1"=5'	9709110
SURVEY BOOK	SHEET
	54 of 57
CONTRACT	PROJECT
B-26411	IM-80-1(163)

38+50

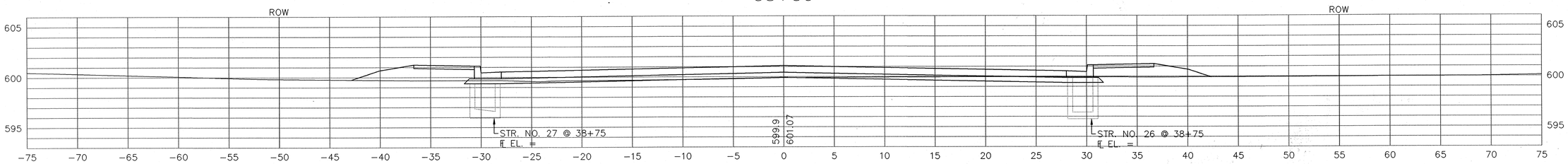

38+00

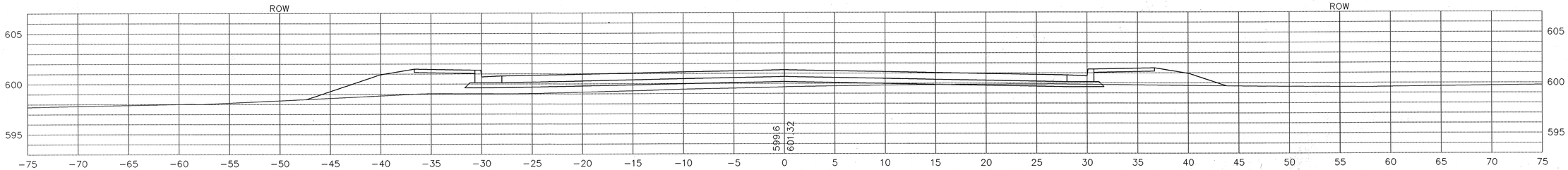

37+50

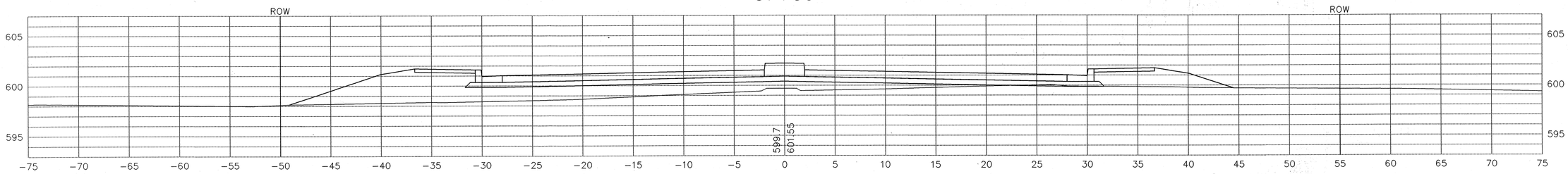

37+00

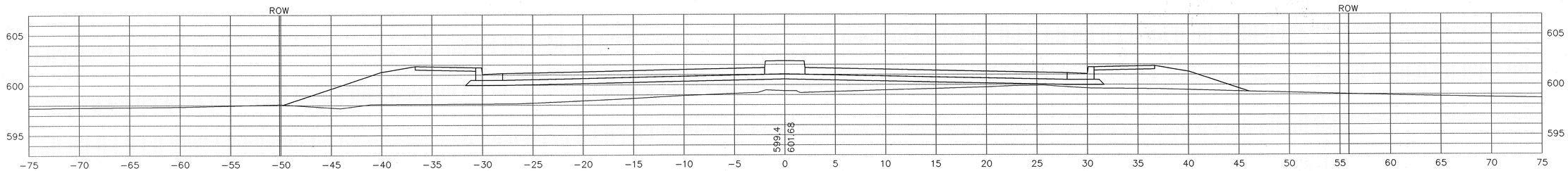

Time: 13:26:45
Date: 12/9/2009
Drawing File: Land Projects P2\603020-1\CHASE\x-sec-rev.dwg.DWG (jpones)
Scale: 1=5(PS)

RECOMMENDED FOR APPROVAL _____ DESIGN ENGINEER DATE

DESIGNED: SCJ | DRAWN: SCJ

CHECKED: DOC | CHECKED: DOC

INDIANA DEPARTMENT OF TRANSPORTATION

CROSS SECTIONS
CHASE STREET OVER I-80/I-94

HORIZONTAL SCALE	BRIDGE FILE
1"=5'	I-80-8-5467
VERTICAL SCALE	DESIGNATION
1"=5'	9709110
SURVEY BOOK	SHEET
	55 of 57
CONTRACT	PROJECT
B-26411	IM-80-1(163)

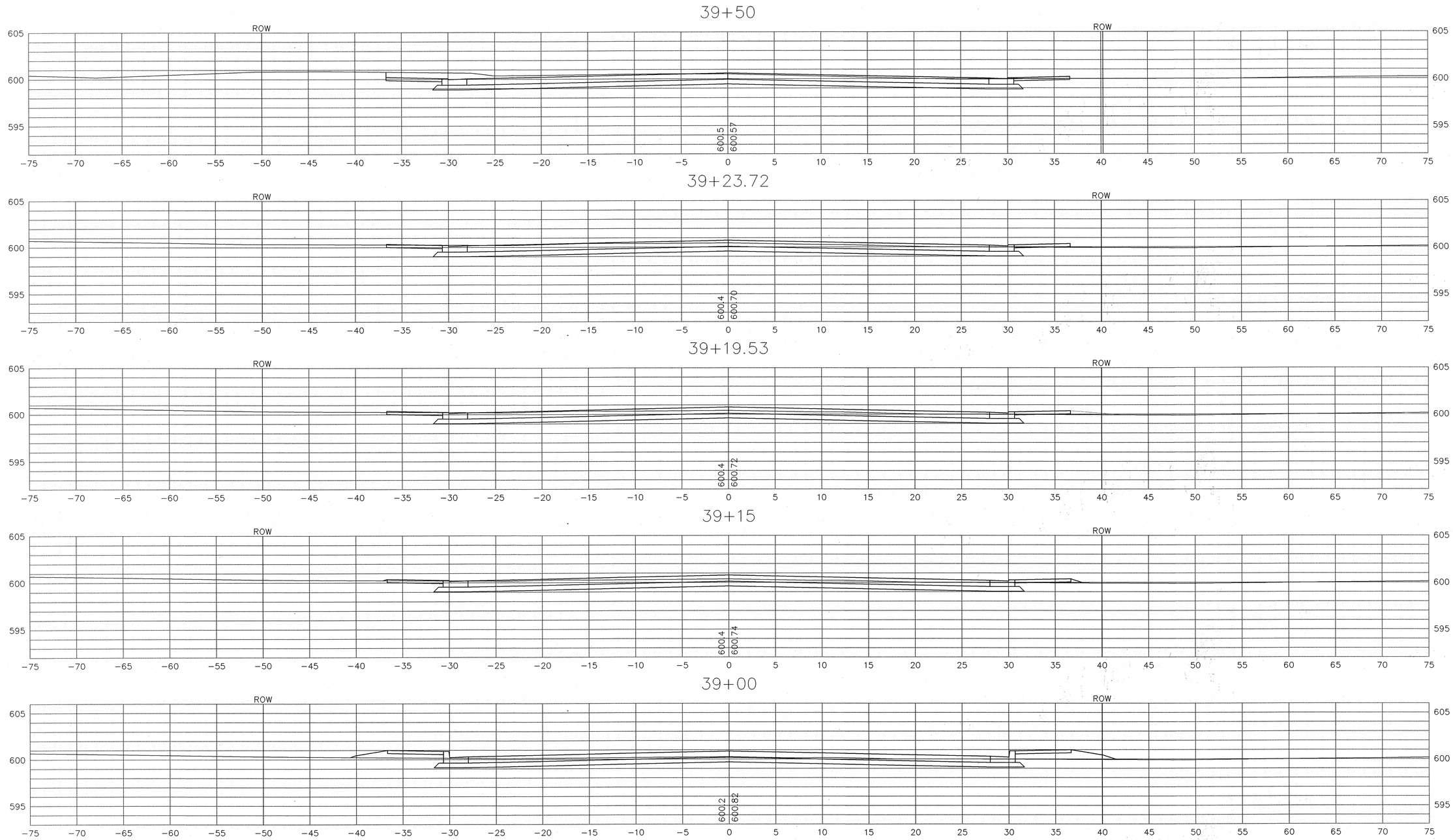

RECOMMENDED FOR APPROVAL _____ DESIGN ENGINEER DATE

DESIGNED: SCJ DRAWN: SCJ

CHECKED: DOC CHECKED: DOC

INDIANA DEPARTMENT OF TRANSPORTATION

CROSS SECTIONS
CHASE STREET OVER I-80/I-94

HORIZONTAL SCALE	BRIDGE FILE
1"=5'	I-80-8-5467
VERTICAL SCALE	DESIGNATION
1"=5'	9709110
SURVEY BOOK	SHEET
	56 of 57
CONTRACT	PROJECT
B-26411	IM-80-1(163)

Time: 13:28:45
Date: 12/8/2009
Scale: 1=5(PS)
Drawing File: Land Projects R2\603020-1\CHASE\x-sec-rev.dwg DWG (sjones)

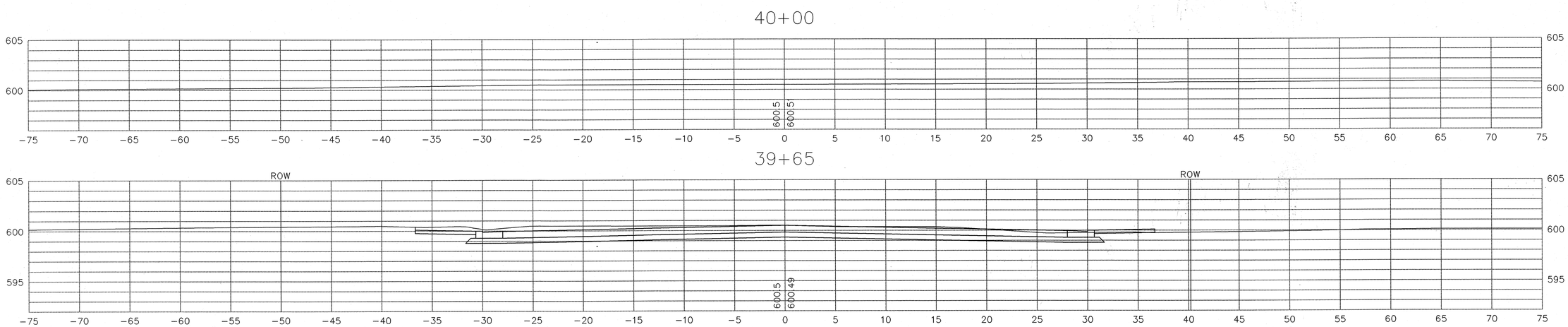

RECOMMENDED FOR APPROVAL _____ DESIGN ENGINEER DATE

DESIGNED: SCJ DRAWN: SCJ

CHECKED: DOC CHECKED: DOC

INDIANA DEPARTMENT OF TRANSPORTATION

CROSS SECTIONS
CHASE STREET OVER I-80/I-94

HORIZONTAL SCALE	BRIDGE FILE
1"=5'	I-80-8-5467
VERTICAL SCALE	DESIGNATION
1"=5'	9709110
SURVEY BOOK	SHEET
	57 of 57
CONTRACT	PROJECT
B-26411	IM-80-1(163)

Time: 13:28:45
Date: 12/6/2002
Scale: 1=5(PS)
Drawing File: Land Projects R2\603020-1\CHASE\x-sec-rev.dwg DWG (gjones)