ROAD CONTRACT NO. R-20622

FEDERAL ROAD REGION NO.	STATE	PROJECT NO.	FISCAL YEAR	SHEET NO.	TOTAL SHEETS
5	IND.	STPN-V510(3)	1990	1	78

DESIGN DATA		
A.D.T. (1989)	13,220	V.P.D.
A.D.T. (2009) PROJECTED	19,644	V.P.D.
D.H.V. (2009)	1,970	V.P.H.
DIRECTIONAL DISTRIBUTION	53	%
TRUCKS D.H.V. 9% A.D.T.	13	%
DESIGN SPEED	40	M.P.H.
ACCESS CONTROL	NONE	
FUNCTIONAL CLASSIFICATION: URBAN PRINCIPAL ARTERIAL		

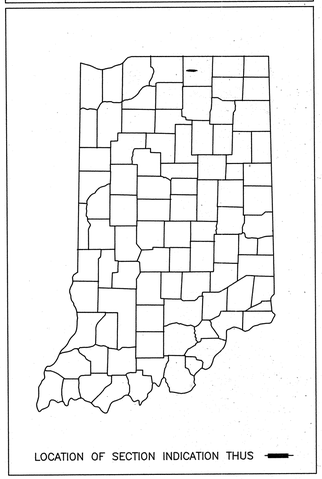

LOCATION OF SECTION INDICATION THUS

INDIANA
DEPARTMENT OF TRANSPORTATION

PLAN AND PROFILE OF PROPOSED

STATE HIGHWAY
ST-PROJECT V510
STPN-PROJECT V510

(D)P.E.
(D)R/W
(3)CONST.
( )UTIL.

BEGINNING AT A POINT ON S.R. 120 APPROXIMATELY 915 FT. SOUTHWEST OF THE INTERSECTION OF S.R. 120 AND COUNTY ROAD 17, THENCE IN A NORTHEASTERLY DIRECTION A DISTANCE OF 1,323.23 FT. TO A POINT APPROXIMATELY 798 FT. NORTHEAST OF THE INTERSECTION OF S.R. 120 AND COUNTY ROAD 17 IN SECTION 36, T-38-N, R-5-E AND SECTION 31, T-38-N, R-6-E, ALL IN CONCORD TOWNSHIP, ELKHART COUNTY, INDIANA.

ROUTE: SR 120 AT: RP 03 + 92

GROSS LENGTH:- 0.324 MI.
NET LENGTH:- 0.324 MI.

NOTE:
WHENEVER ST-V510(D)
APPEARS ON THESE PLANS OR CONTRACT DOCUMENTS
IT SHALL BE INTERPRETED AS STPN-V510(3)

SCALES:-
PLAN {LONG:- 1"= 20' TRANS:- 1"= 20'} PROFILE {HORIZ:- 1"= 20' VERT:- 1"= 5'}

MAX. GRADE 0.50%

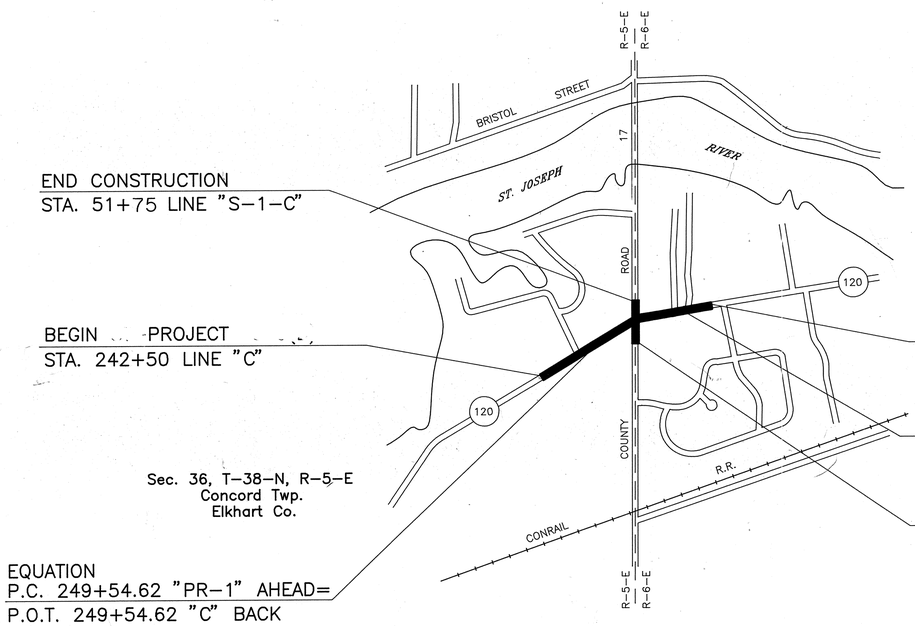

NO SCALE

ELKHART COUNTY

Recommended for Approval: 7-26-91
Date:
Richard Van Cleave
Road Engineer

RICHARD L. VanCLEAVE REGISTERED No. 9750 STATE OF INDIANA PROFESSIONAL ENGINEER

Recommended for Approval: 9-27-91
Date:
Design Consultant Services Manager

DAVID H. FLUCKEBAUM REGISTERED No. 20674 STATE OF INDIANA PROFESSIONAL ENGINEER

Approved: 10-4-91
Date:
Chief, Division of Design

THESE PLANS PREPARED BY:
FIRST GROUP ENGINEERING INC.
CONSULTING ENGINEERS

Lawrence C. Suhre 8/1/90
Lawrence C. Suhre

LAWRENCE C. SUHRE REGISTERED No. 18417 STATE OF INDIANA PROFESSIONAL ENGINEER

FEDERAL HIGHWAY ADMINISTRATION
DEPARTMENT OF TRANSPORTATION
APPROVED
DIVISION ADMINISTRATOR DATE

ROAD FILE:-

INDIANA DEPARTMENT OF HIGHWAYS
STANDARD SPECIFICATIONS DATED 1988
TO BE USED WITH THESE PLANS

DESCRIPTION CODE 8572070

PROJECT NO.	LINE	SHEET NO.	TOTAL SHEETS	FILE
STPN-V510(3)		1	78	

R 20622

UTILITIES

INDIANA & MICHIGAN ELEC. CO.
201 S. 2nd STREET
ELKHART, IN

N.I.P.S. CO.
232 S. MAIN
GOSHEN, IN

GTE
210 W. LEXINGTON AVE.
ELKHART, IN

SUBURBAN UTILITIES
OWNER: ROBERT MILLER (ATTORNEY)

REVISIONS

SHEET NO.	DATE	REVISED
2	11-12-90	GENERAL NOTES & INDEX
3	11-12-90	SUBGRADE DEPTH
4	11-12-90	LEGEND
5	11-12-90	PAVEMENT MARKINGS
7	11-12-90	DRIVEWAY MATERIALS
10	11-12-90	DRIVEWAY MATERIALS
11	11-12-90	ISLAND & SHOULDER ADDED
12	11-12-90	PROFILE ADDITION
14	11-12-90	SIGN & RAISED PAVEMENT MARKERS
15	11-12-90	TRAFFIC ITEMS & SHOULDER
29	11-12-90	STRUCTURE NOS. 27,28,55
30	11-12-90	APPROACHES & DRIVES
6, 7	6-17-91	ADDED SIGNS & LT. POLES & TANK CAPS &
		FLAG POLE.
10	2-25-92	ADDED NOTE NOT TO DISTURB LIGHT POLE
9, 11, 14, 30	1-25-93	WIDEN DR. TO 40' STA 48+50 RT. LINE "S-1-C"
6, 11, 29, 66 & 67	3-17-93	STRS. NO. 24,26, 27 & 31 REQUESTED BY UTILITIES
		TO AVOID GAS MAIN
5,6	3-17-93	Add EXIST. waterline 6"
3, 5, 30, 61, 62	3-31-93	Rev. Drs STA 244+30 LT & 245+10 LT

NOTE: THIS SET OF PLANS SHALL NOT BE CONSTRUED TO BE A PROPERTY RETRACEMENT SURVEY. WHERE PROPERTY LINES, CORNERS, SUBDIVISIONS OR SECTION CORNER INFORMATION IS SHOWN, IT IS BASED ON PHYSICAL EVIDENCE OR TESTAMONY.

GENERAL NOTES

	Standard divided lane sections for Federal Aid _____ Projects _____ as shown on Sheet No. ___ to be used on this project.
	Standard ramp section _____ to be used on this project. Pavement thickness shall be _____ inches.
	Standard single lane pavement sections _____ as shown on Sheet No ___ to be used on this project.
**	A 17 inch BIT. pavement shall be used.
**	Typical cross-section as shown on Sheets No. 3 to be used on this project.
**	Standards under dates as listed in the index on this sheet to be used on this project.
	All Ditches of 1% grade and over shall be sodded except where ditch is in rock cut or where Paved Side Ditch is to be constructed.
	Sodding shall be placed as shown on Standard and Typical Cross-Sections and on Miscellaneous Standard Sheet "MB."
	All Earth Shoulders, Median Area, Cut and Fill slopes shall be plain or mulched seeded except where Sodding is specified.
	Overhaul and Added Haul Quantities as shown in the Balances are for information only
**	Excavation Quantities as shown include estimated excavation for Public and Private Approaches. See Table on Sheet No. 30
	The final Cross-Sections of the "Grading Contract" shall be the original cross-sections of the "Paving Contract" except that partial or complete cross-sections shall be taken if necessary to determine the actual quantities of Excavation.
	Paper Relocation is to be cross-sectioned by the Project Engineer before construction.
	Where existing surface is located outside the limits of new construction between Station _____ and Station _____, the Contractor will be required to remove the present roadway surface and base as directed by the Engineer.
**	For Kinds of Pipe permitted for each size and classification as shown on the Structure Data Sheet, see Miscellaneous Standard Sheets "MP".
	Such part of existing downspout drains that are disturbed by either adding or replacing the curb, shall be replaced and connected as directed by the Engineer. Payment for this work shall be included in the Contract unit price for " _____ Curb."
	The Contractor must accept the plan quantities of Subbase as given on the Estimate of Quantities Sheet subject to the conditions as set out in 304.07 of the Standard Specifications.
**	The minimum grade for Underdrains shall be 0.20%. Where the profile grade is less than 0.20% special grades for Underdrains shall be established by the Engineer.
**	County Road 17 shall have 4 " Edge Lines" and "Skip Center Lines" as set out in "Special Provisions" and " Yellow Barrier Lines" shall be placed as shown on plans.
	All Limited Access R/W (L. A. R/W) to be fenced with Chain Line Type Fence (C.L.T.F.) or Farm Field Type Fence (F.F.T.F) as specified in the plans.
**	Curves shall be Superelevated according to the Standards of _____ (Except Special "Super-Transitions" shall be detailed on Sheet No. 12)
	A Keyway Joint is to be constructed on Median side of each pavement.
	Contraction Joints shall be placed at all manholes within pavement limits.
	Contraction Joints shall be placed at the beginning and end of all radii, at Street and alley intersections.
	All Highway Drainage Structures 42" dia. and over , have been designed on the basis of a 10 year storm frequency. (Except Structure Numbers _____, which have been designed for a _____ year storm frequency.) The elevations of the design headwater for each culvert having a design flood of more than 500 cubic feet per second, are shown on the Plan-Profile Sheets at the culvert locations.
	The quantity Crown-Vetch Seeding, shown on the Estimate of Quantities Sheet is to be used at those locations where the slopes are 3:1 or steeper or in an area requiring sand cut or sand fills or as directed by the Engineer.
	The quantity of Peat "Excavation" as shown the plans has been estimaited on the basis of theoretical cross-sections by using Method "A" where it applies and Method "B" where it applies.
**	Preformed Joint Material for Drives, will not be paid for directly, the cost thereof to be included in the contract unit price for the various items in the contract
**	For Paved side ditch and Sodding Quantities see table on Sheet No. 28
	When Guard Rail Type "A" is called for on this project the Contractor shall use the Steel Beam section only.
	When Guard Rail Type "B" is called for on this project the Contractor shall have the option of using either the Steel Beam Section, the Semi-Ellipse Aluminum Tubular Section or the Steel Tubular Section.
	When Guard Rail Type "C" is called for on this project the Contractor shall have the option of using either the Semi-Ellipse Aluminum Tubular Section or the Steel Tubular Section.
	When Guard Rail Type "D" is called for on this project the Contractor shall have the option of using either the Steel Beam Sections, or the Semi-Ellipse Aluminum Tubular Section.
	When Guard Rail Type "E" is called for on this project the Contractor shall have the option of using either the Steel Beam Section, the Semi-Ellipse Aluminum Tubular Section or the Steel Tubular Section.
	When Guard Rail Type "F" is called for on this project the Contractor shall have the option of using either the Steel Beam Section, the Semi-Ellipse Aluminum Tubular Section or the Steel Tubular Section
	When Guard Rail Type "G" is called for on this project the Contractor shall have the option of using either, the the Semi-Ellipse Aluminum Tubular Section or the Steel Tubular Section.
	The Engineer may Change the Type of Fence Shown on the Plans upon Receipt of Reasonable, Written Justification from the Property Owner.
	Prior to extending existing pipe structures, headwall in place on extended end shall be removed
**	Unless otherwise specified the contractor shall have the option of using either Hot Asphaltic Concrete (HAC) or Hot Asphaltic Emulsion (HAE) on all Bituminous items.
	Movement of excavation is shown on Mass Haul Diagram on Sheet No. _____, with the entire project being one balance.
**	All disturbed areas that are not paved shall be nursery sodded
**	For Location and Type of Erosion Control See Sheet No. 27

** REPRESENTS GENERAL NOTES REQUIRED

INDEX

FEDERAL ROAD REGION NO.	STATE	PROJECT NO.	FISCAL YEAR	SHEET NO.	TOTAL SHEETS
5	IND.	ST-V510(D)	1990	2	78

SHEET NO.	DESIGNATION	F.H.W.A APPROVAL	DATE ADOPTED "A" or LATEST REVISION "R"
1	TITLE SHEET		
2	INFORMATION SHEET		
3	TYPICAL CROSS SECTION		
4 - 10	PLAN AND PROFILE		
11	CONSTRUCTION DETAILS		
12	SUPERELEVATION TRANSITION DIAGRAM		
13	SPOT ELEVATION		
14	PAVEMENT MARKINGS AND SIGNS		
15	TRAFFIC SIGNAL MODERENIZATION		
16 - 18	MAINTENANCE OF TRAFFIC		
19 - 26	SIGNALS DETAILS		
27	EROSION CONTROL		
28	MISCELLANEOUS TABLES		
29	STRUCTURE DATA		
30, 30A	APPROACH TABLE, PLAT NO. 3		
	ST'D. RAMP SECTION		
31	ST'D. PAVEMENT JOINTS SHEET "A"	*	R 3-1-90
	ST'D. PAVEMENT JOINTS SHEET "B"		
32	MISCELLANEOUS STANDARDS, SHEET "MA"	*	R 3-1-90
	MISCELLANEOUS STANDARDS, SHEET "MA-1"		
	MISCELLANEOUS STANDARDS, SHEET "MA-2"		
	MISCELLANEOUS STANDARDS, SHEET "MB"		
	MISCELLANEOUS STANDARDS, SHEET "MB-1"		
33	MISCELLANEOUS STANDARDS, SHEET "MC"	1-11-89	R 9-1-88
34	MISCELLANEOUS STANDARDS, SHEET "MC-1"	1-11-89	R 9-1-88
35	MISCELLANEOUS STANDARDS, SHEET "MC-2"	1-11-89	R 9-1-88
36	MISCELLANEOUS STANDARDS, SHEET "MD"	12-27-82	R 10-1-82
37	MISCELLANEOUS STANDARDS, SHEET "MD-1"	12-27-82	R 10-1-82
38	MISCELLANEOUS STANDARDS, SHEET "MD-2"	5-5-87	R 4-1-87
39	MISCELLANEOUS STANDARDS, SHEET "MD-3"	12-27-82	R 10-1-82
	MISCELLANEOUS STANDARDS, SHEET "MD-4"		
40	MISCELLANEOUS STANDARDS, SHEET "ME"	5-19-88	R 4-4-88
	MISCELLANEOUS STANDARDS, SHEET "ME-1"		
41	MISCELLANEOUS STANDARDS, SHEET "ME-2"	6-27-85	R 9-4-84
42	MISCELLANEOUS STANDARDS, SHEET "MH"	*	R 3-1-90
43	MISCELLANEOUS STANDARDS, SHEET "MH-1"	2-3-87	R 2-2-87
44	MISCELLANEOUS STANDARDS, SHEET "MH -3"	5-19-88	R 4-4-88
45	MISCELLANEOUS STANDARDS, SHEET "MI"	5-19-88	R 4-4-88
46	MISCELLANEOUS STANDARDS, SHEET "MI-1"	7-13-88	R 6-1-88
	MISCELLANEOUS STANDARDS, SHEET "MI-2"		
	MISCELLANEOUS STANDARDS, SHEET "MJ"		
	MISCELLANEOUS STANDARDS, SHEET "MJ-1"		
	MISCELLANEOUS STANDARDS, SHEET "MJ-2"		
	MISCELLANEOUS STANDARDS, SHEET "MJ-2A"		
	MISCELLANEOUS STANDARDS, SHEET "MJ-3"		
47	MISCELLANEOUS STANDARDS, SHEET "MN"	9-24-85	R 6-3-85
48	MISCELLANEOUS STANDARDS, SHEET "MP"	9-24-85	R 6-3-85
	MISCELLANEOUS STANDARDS, SHEET "MP-1"		
	MISCELLANEOUS STANDARDS, SHEET "MQ"		
	MISCELLANEOUS STANDARDS, SHEET "MR"		
	MISCELLANEOUS STANDARDS, SHEET "S"		
	MISCELLANEOUS STANDARDS, SHEET "S-1"		
	MISCELLANEOUS STANDARDS, SHEET " "		
	MISCELLANEOUS STANDARDS, SHEET "MT-1"		
48A	MISCELLANEOUS STANDARDS, SHEET "MT-2"	6-28-89	R 5-1-89
49	MISCELLANEOUS STANDARDS, SHEET "MT-4"	12-1-88	R 9-1-88
50	MISCELLANEOUS STANDARDS, SHEET "MT-3"	8-5-88	R 8-1-88
	MISCELLANEOUS STANDARDS, SHEET " "		
51	MISCELLANEOUS STANDARDS, SHEET "MT-9E"	12-1-88	R 9-1-88
52	MISCELLANEOUS STANDARDS, SHEET "MT-9I"	8-5-88	A AUG. 1988
	MISCELLANEOUS STANDARDS, SHEET "MT-1I"		
53	MISCELLANEOUS STANDARDS, SHEET "MT-18"	1-6-88	A NOV. 1987
54	MISCELLANEOUS STANDARDS, SHEET "MT-19"	1-6-88	A NOV. 1987
54 A	MISCELLANEOUS STANDARDS, SHEET "MT-20"	7-13-88	R 6-1-88
	ST'D. R.C. CULV. W. O. F. SK.		
	ST'D. R.C. CULV. U. F. SK.		
	GUARD RAIL SHEET GR-1		
	GUARD RAIL SHEET GR-2		
	GUARD RAIL SHEET GR-3		
	GUARD RAIL SHEET GR-4A		
	GUARD RAIL SHEET GR-4		
	ALUMINUM GUARD RAIL DETAILS, SHEET GR-5		
	STEEL TUBE GUARD RAIL DETAILS, SHEET GR-6		
	GUARD RAIL PIER CONNECTION DETAILS, SHEET GR-7		
	GUARD RAIL SHEET GR-8		
	GUARD RAIL SHEET GR-9		
	GUARD RAIL - BURIED ENDS, SHEET, GR-10		
	GUARD RAIL - BREAKAWAY CABLE TERMINAL, SHEET GR 10A		
	GUARD RAIL - BREAKAWAY CABLE TERMINAL, SHEET GR 10B		
	GUARD RAIL - BREAKAWAY CABLE TERMINAL, SHEET GR 10C		
	CONCRETE MEDIAN BARRIER, SHEET CB-1		
	ST'D. FOR SUPERELEVATION SHEET 2		
	ST'D. DETOUR SIGNS, SHEET 1		
	ST'D. DETOUR SIGNS, SHEET 1A		
	ST'D. DETOUR SIGNS, SHEET 2		
55	ST'D. DETOUR SIGNS, SHEET 2A	*	A SEPT. 1988
56	ST'D. DETOUR SIGNS, SHEET 3	*	A 9-1-88
	ST'D. DETOUR SIGNS, SHEET 3A		
57	ST'D. DETOUR SIGNS, SHEET 4	1-11-89	R 9-1-88
58	ST'D. DETOUR SIGNS, SHEET 5	*	R 9-1-88
	TRAFFIC SIGN DETAILS, SHEET 9		
59 - 78	CROSS SECTIONS		

* F.H.W.A APPROVAL PENDING

R-20622

Rev 3-31-93 Underdrain

FEDERAL ROAD DIVISION NO.	STATE	PROJ. NO.	FISCAL YEAR	SHEET NO.	TOTAL SHEETS
5	IND.	ST-V510(D)	1990	3	78

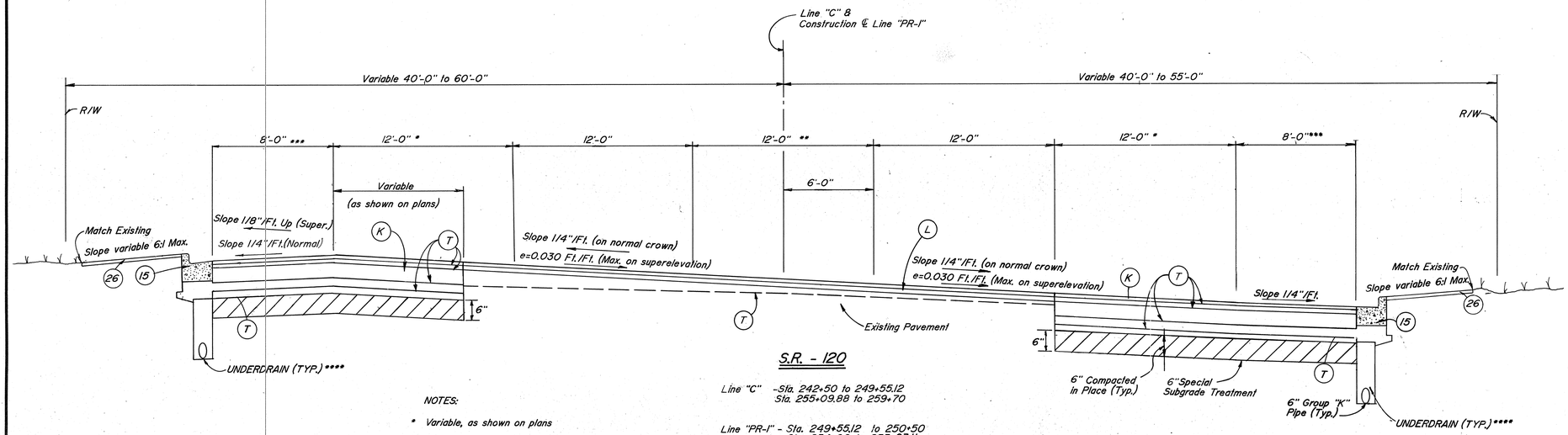

S.R. - 120

Line "C" -Sta. 242+50 to 249+55.12
Sta. 255+09.88 to 259+70

Line "PR-1" - Sta. 249+55.12 to 250+50
Sta. 254+00 to 255+03.11

NOTES:

* Variable, as shown on plans

** Variable from 0'-0" to 12'-0" from Sta. 244+40 to 246+00 & 12'-0" to 0'-0" from Sta. 256+50 to 257+10

*** For Actual Loction See Sheet No. 4-7

**** See Misc. Slds. Sheet MN for Details and Sheet No. 24 for Location

SEE SHEET 14 FOR PAVEMENT MARKING DETAIL

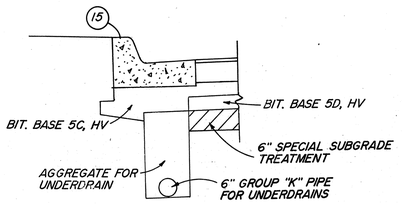

UNDERDAIN DETAIL

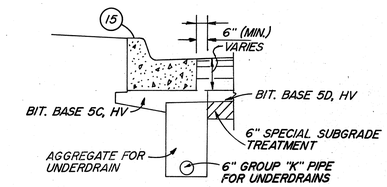

ALTERNATE UNDERDRAIN DETAIL

LEGEND

K	110#/SYD. BITUMINOUS SURFACE 11 HV ON 220#/SYD. BITUMINOUS BINDER 8 OR 9 HV ON 660#/SYD. BITUMINOUS BASE 5 HV ON 400#/SYD. BITUMINOUS BASE 5C HV ON 400#/SYD. BITUMINOUS BASE 5D HV
L	BITUMINOUS RESURFACE- 110#/SYD. BITUMINOUS SURFACE 11.HV ON 220#/SYD. BITUMINOUS BINDER, 8 OR 9 HV ON 0 to 440#/SYD. BITUMINOUS MIXTURE FOR WEDGE & LEVELING, HV
15	STANDARD CONCRETE CURB AND GUTTER
26	SODDING (NURSERY)
T	TACK COAT

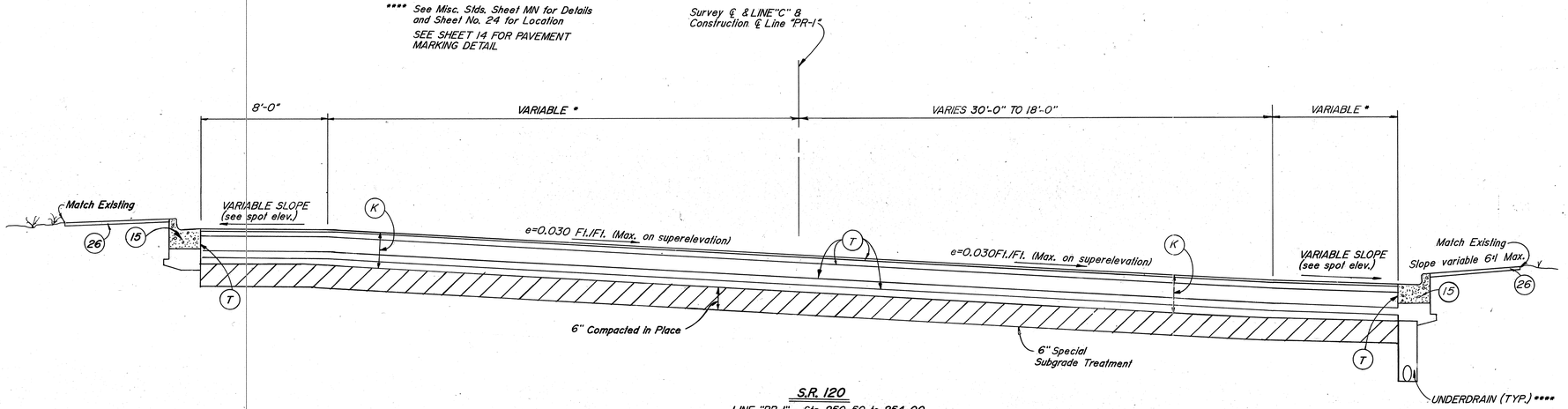

S.R. 120

LINE "PR-1" - Sta. 250+50 to 254+00

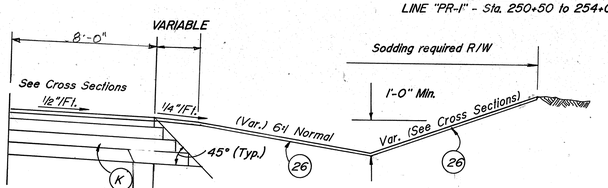

BITUMINOUS SHOULDER DETAIL

No Scale

Sta. 242+50 to Sta. 246+78 "C" Rt.
Sta. 242+50 to Sta. 246+60 "C" Lt.
Sta. 255+33 to Sta. 259+70 "C" Rt.
Sta. 255+09 to Sta. 259+70 "C" Lt.

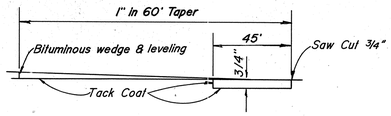

RESURFACE TERMINATION DETAIL

No Scale

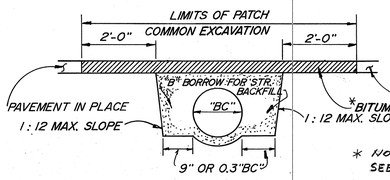

* NOT TO BE PAID FOR DIRECTLY. SEE SUPPLEMENTAL SPEC. 715.12

DETAIL FOR PLACING PIPE UNDER EXISTING ROADWAY

NOT TO SCALE

NOTE: *EL MODELLANEJUS STD. SHEET

INDIANA DEPARTMENT OF TRANSPORTATION
TYPICAL CROSS SECTIONS

SCALE:- HORIZ. - 1/4" = 1'-0"
VERT. - 1/2" = 1'-0"

LAWRENCE C. SUHRE REGISTERED No. 18417 STATE OF INDIANA PROFESSIONAL ENGINEER

R-20622

SF-22397

TP110

FEDERAL ROAD REGION NO.	STATE	PROJECT NO.	FISCAL YEAR	SHEET NO.	TOTAL SHEETS
5	IND.	ST-V510(D)	1990	4	78

LEGEND

(C)	CEMENT CONCRETE PAVEMENT FOR DRIVEWAYS 6"
(K)	110#/SYD. BITUMINOUS SURFACE 11, HV ON 220#/SYD. BITUMINOUS BINDER 8 OR 9, HV ON 660#/SYD. BITUMINOUS BASE, 5 HV ON 400#/SYD. BITUMINOUS BASE, 5C HV ON 400#/SYD. BITUMINOUS BASE 5D HV
(L)	BITUMINOUS RESURFACE : 110#/SYD. BITUMINOUS SURFACE 11, HV ON 220#/SYD. BITUMINOUS BINDER 8 OR 9, HV ON 0 TO 440#/SYD. BITUMINOUS MIXTURE FOR WEDGE AND LEVELING, HV
(D)	330#/SYD. BITUMINOUS MIXTURE FOR APPROACHES, HV ON 3" TYPE "O" COMPACTED AGGREGATE BASE 53
(13)	CONCRETE CURB
(15)	STANDARD CONCRETE CURB & GUTTER
(16)	MONOLITHIC CURB (COST TO BE INCLUDED IN CEMENT CONC. PV'MT. FOR DRIVEWAYS)
	SURFACE MILLING BITUMINOUS
	PAVEMENT PATCHING. HV SEE DETAIL SHEET NO.3

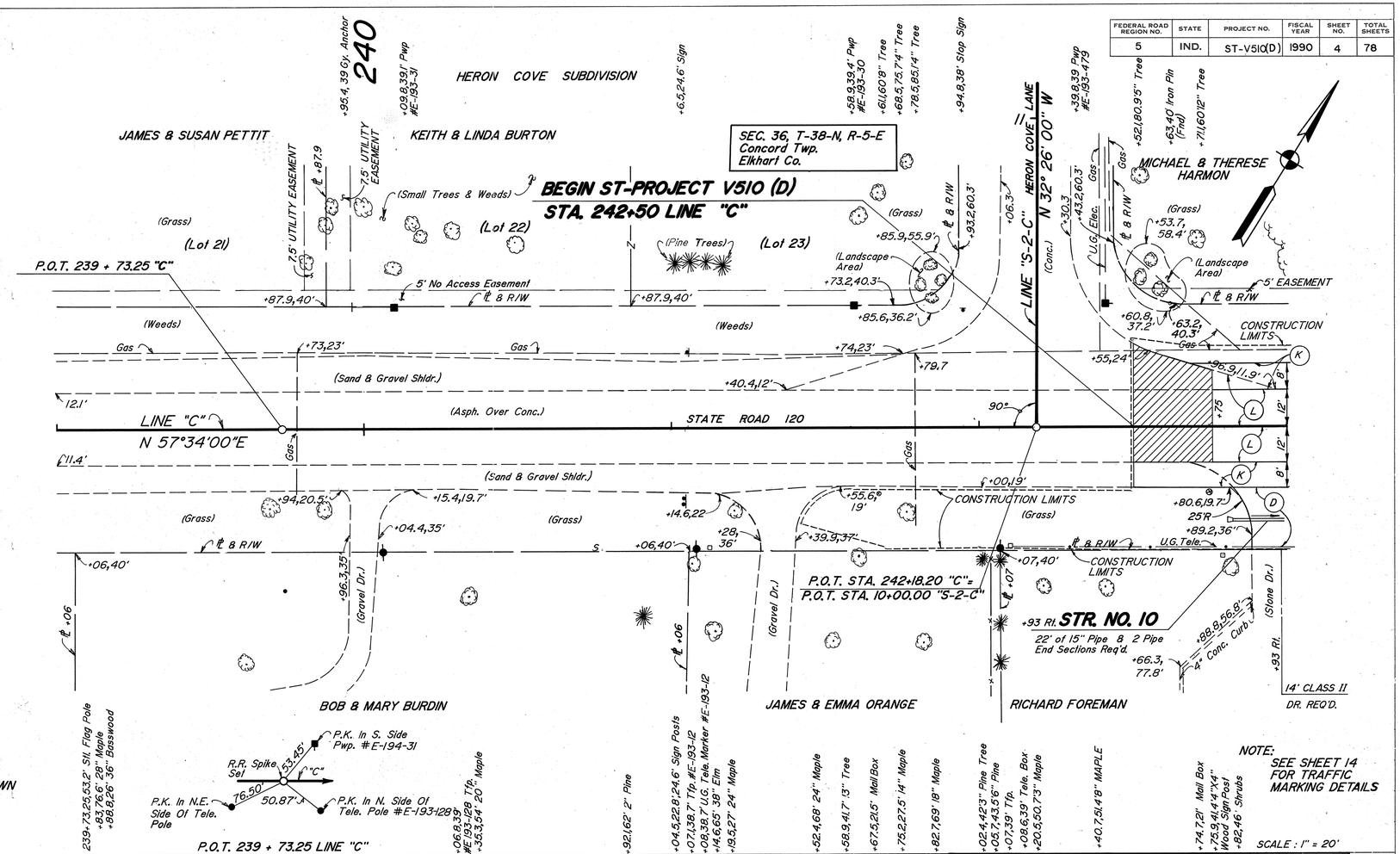

NOTE: SEE SHEET 14 FOR TRAFFIC MARKING DETAILS

SCALE : 1" = 20'

B.M. ELK 7- In Elkhart County, At The Bridge On C.R. 17 & The St. Joe River, Standard Bronze Disc. In The N.E. Corner Of The Bridge. Stamped Elk #7(Reset In 1983) El. 754.957

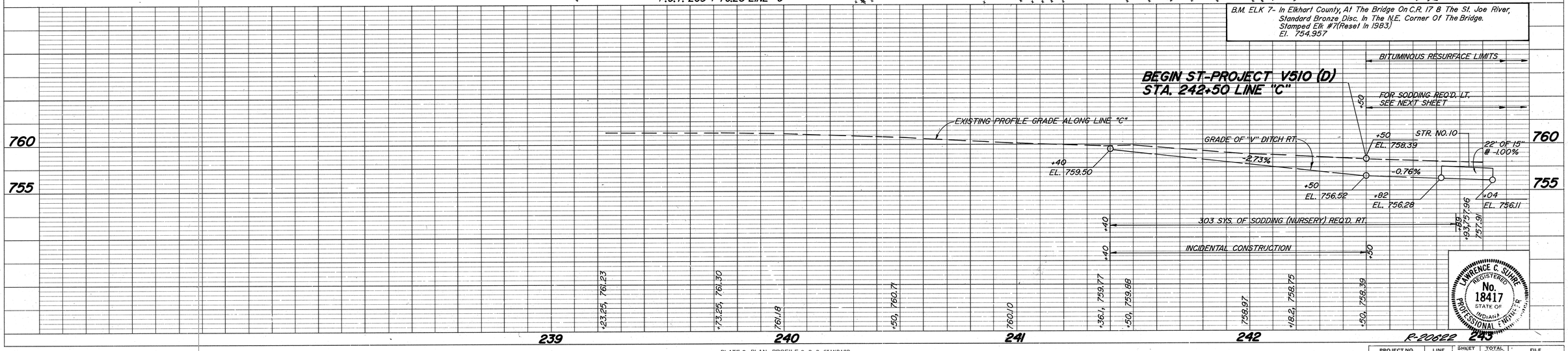

LAWRENCE C. SHIRE REGISTERED No. 18417 STATE OF INDIANA PROFESSIONAL ENGINEER

R-20622

PLATE 3 - PLAN - PROFILE B. R. R. STANDARD
1975

PROJECT NO.	LINE	SHEET NO.	TOTAL SHEETS	FILE
ST-V510(D)	"C"	4	78	

PLAN		BY	DATE
SURVEYED		S. WILLIAMS	6-89
PLOTTED		R. WILLING	10-89
NOTE BOOK	ALIGNMENT CHECKED	L. SUHRE	10-89
No. 8034TL	R/W OF WAY CHECKED	R. WILLING	2-90
		R. THOMPSON	

PROFILE		BY	DATE
SURVEYED		S. WILLIAMS	6-89
PLOTTED		R. WILLING	10-89
NOTE BOOK	GRADES CHECKED	L. SUHRE	10-89
No. 8034TL	B.M.'S NOTED	R. WILLING	10-89
	STRUCTURE NOTATIONS CHECKED	R. THOMPSON	9-89

TP116

REV. 5-22-91 ADDED SIGN AT STA. 246+56 TO 246+70 PER.
Rev 3-31-93 Drs 244+30 Lt & 245+10 Lt.
Rev 3-16-93 6" Waterline Top

FEDERAL ROAD REGION NO.	STATE	PROJECT NO.	FISCAL YEAR	SHEET NO.	TOTAL SHEETS
5	IND.	ST-V510(D)	1990	5	78

STA. 246+45.80 "C" LT. 22' MODIFIED STREET APPROACH REQ'D. P.O.T. 246+45.80 MONUMENT TYPE "A" REQ'D.

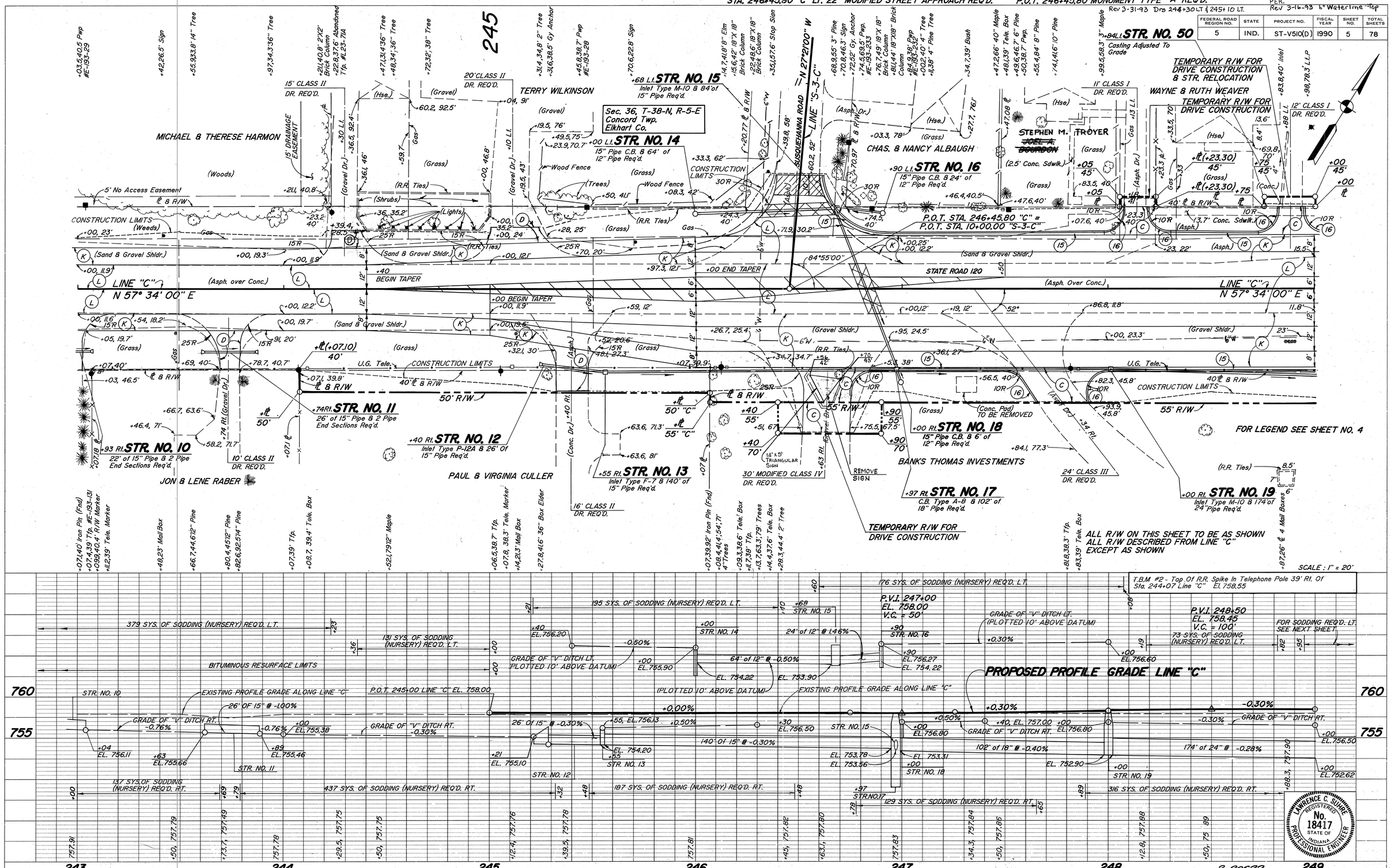

PLAN — SURVEYED: S. WILLIAMS; PLOTTED: R. WELLING; ALIGNMENT CHECKED: L. SHARE; R/W CHECKED: R. THOMPSON; NOTE BOOK: No. 1503/T2

PROFILE — SURVEYED: S. WILLIAMS; PLOTTED: R. WELLING; GRADES CHECKED: L. SHARE; R/W CHECKED: R. THOMPSON; NOTE BOOK: No. 1503/T2; LENGTHS & ELEVATIONS CHECKED: J. BIRD

LAWRENCE C. SHARE REGISTERED No. 18417 STATE OF INDIANA PROFESSIONAL ENGINEER

R-20622

PLATE 3 - PLAN - PROFILE B. R. R. STANDARD
1975

PROJECT NO.	LINE	SHEET NO.	TOTAL SHEETS	FILE
ST-V510(D)	"C"	5	78	

TP116

REV.: 3-16-93 STRS. NO. 24, 26, 27 & 31 REQUESTED BY UTILITIES TO AVOID GAS MAIN. Add 6" water line on zero

REV. 6-17-91 ADDED SIGNS & LT. POLES & FILLER CAPS & FLAG POLES BETWEEN STA. 251+97 AND 253+85

FEDERAL ROAD REGION NO.	STATE	PROJECT NO.	FISCAL YEAR	SHEET NO.	TOTAL SHEETS
5	IND.	ST-V510(D)	1990	6	78

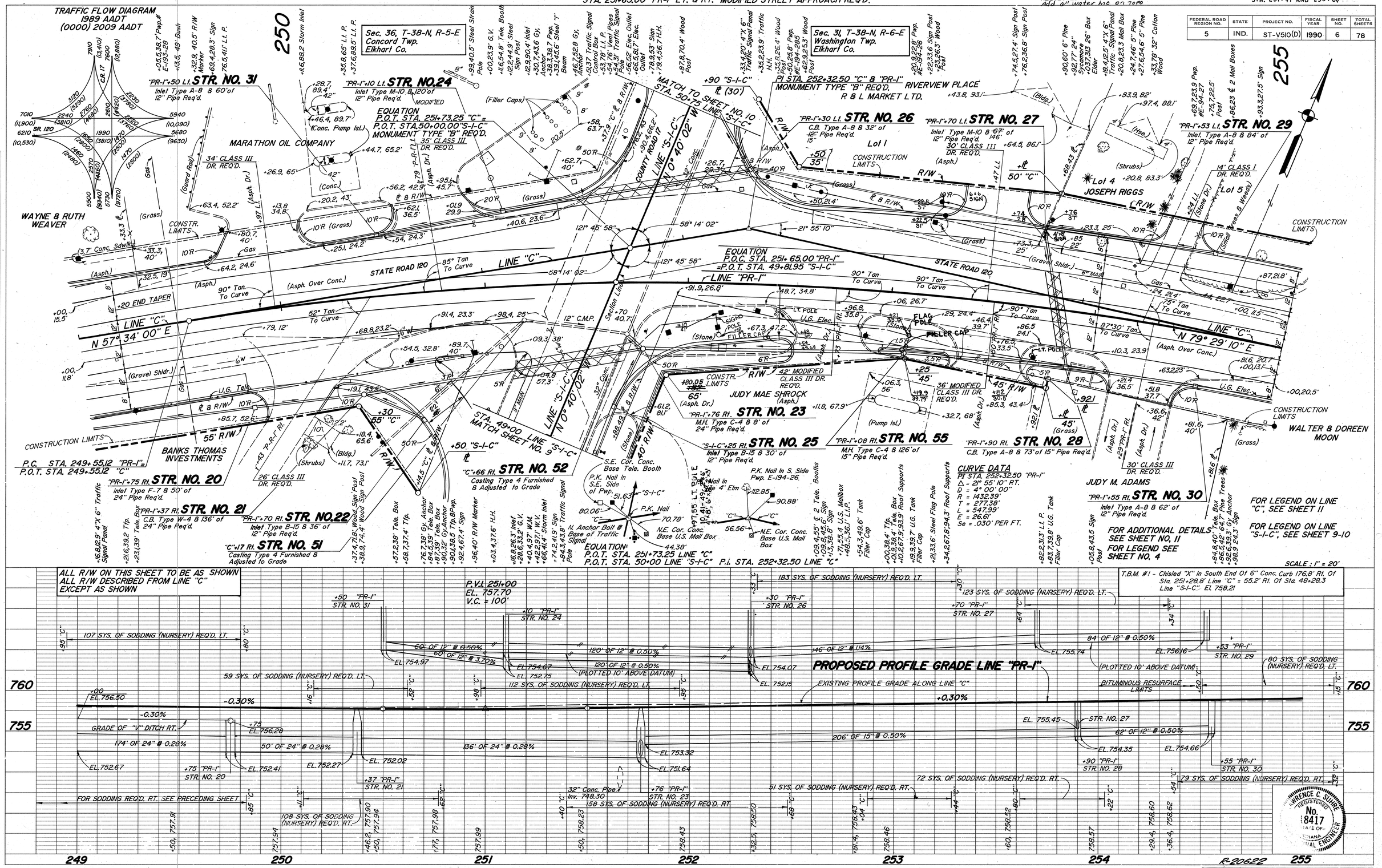

PLATE 3 - PLAN - PROFILE B. R. R. STANDARD
1975

PROJECT NO.	LINE	SHEET NO.	TOTAL SHEETS	FILE
ST-V510(D)	"C"	6	78	

TP116

STA. 259+37 RT. - STREET APPROACH REQ'D.

FEDERAL ROAD REGION NO.	STATE	PROJECT NO.	FISCAL YEAR	SHEET NO.	TOTAL SHEETS
5	IND.	ST-V510(D)	1990	7	78

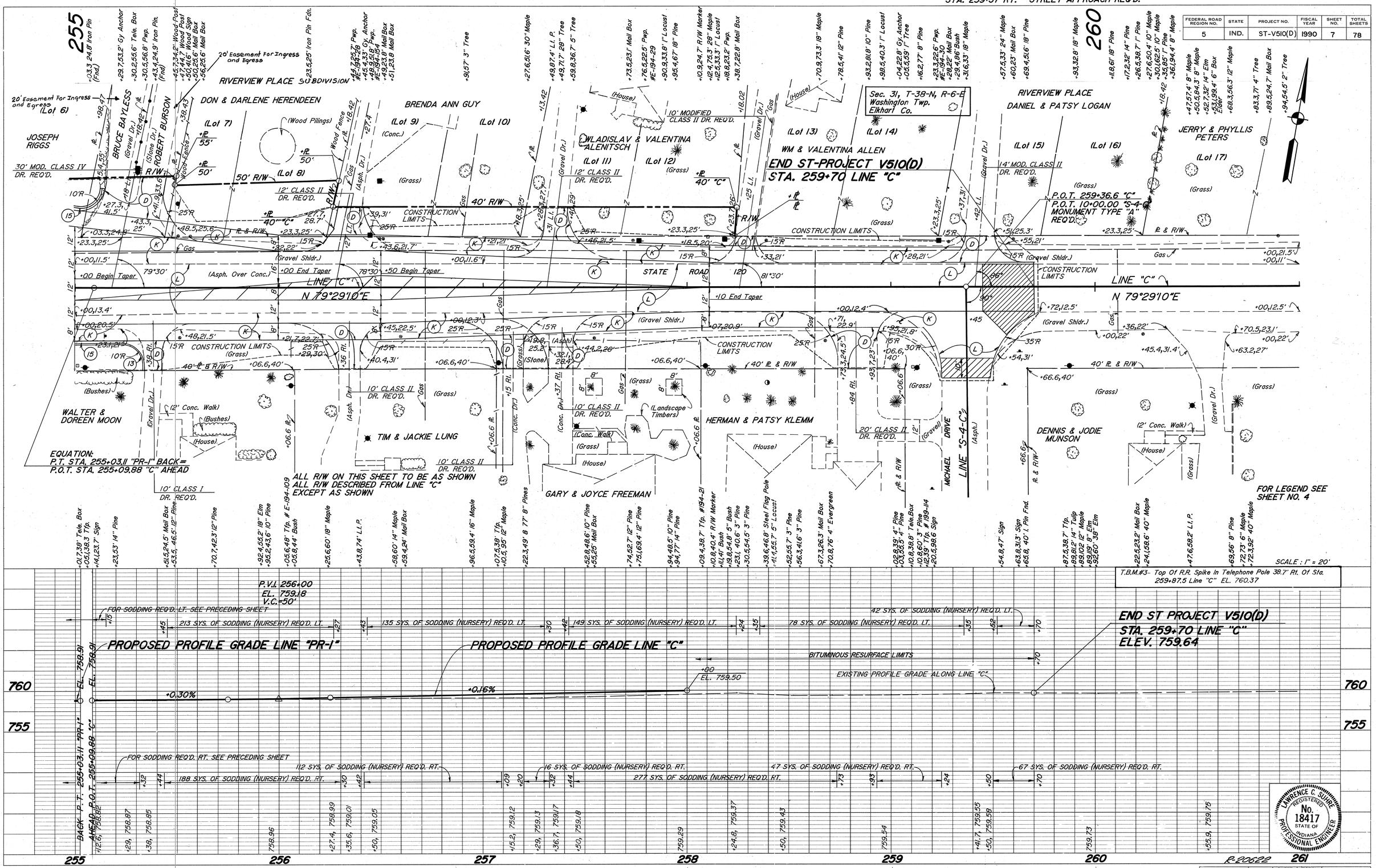

DATE	BY	REVISIONS
2-89	S. WILLIAMS	
10-89	R. WILLING	
10-89	L. SUYRE	
10-89	S. WILLIAMS	
9-89	R. THOMPSON	

PLAN — SURVEYED: S. WILLIAMS; PLOTTED: R. WILLING; ALIGNMENT CHECKED: L. SUYRE; R/W CHECKED: S. WILLIAMS; R/W MAP CHECKED: R. THOMPSON; NOTE BOOK No. 805-472

PROFILE — SURVEYED: S. WILLIAMS; PLOTTED: R. WILLING; GRADES CHECKED: L. SUYRE; R.R.X. CHECKED: S. WILLIAMS; STRUCTURE NOTATIONS CHECKED: R. THOMPSON; NOTE BOOK No. 805-472

PLATE 3 - PLAN - PROFILE B. R. R. STANDARD
1975

PROJECT NO.	LINE	SHEET NO.	TOTAL SHEETS	FILE
ST-V510(D)	"C"	7	78	

TP116

FEDERAL ROAD REGION NO.	STATE	PROJECT NO.	FISCAL YEAR	SHEET NO.	TOTAL SHEETS
5	IND.	ST-V510(D)	1990	8	78

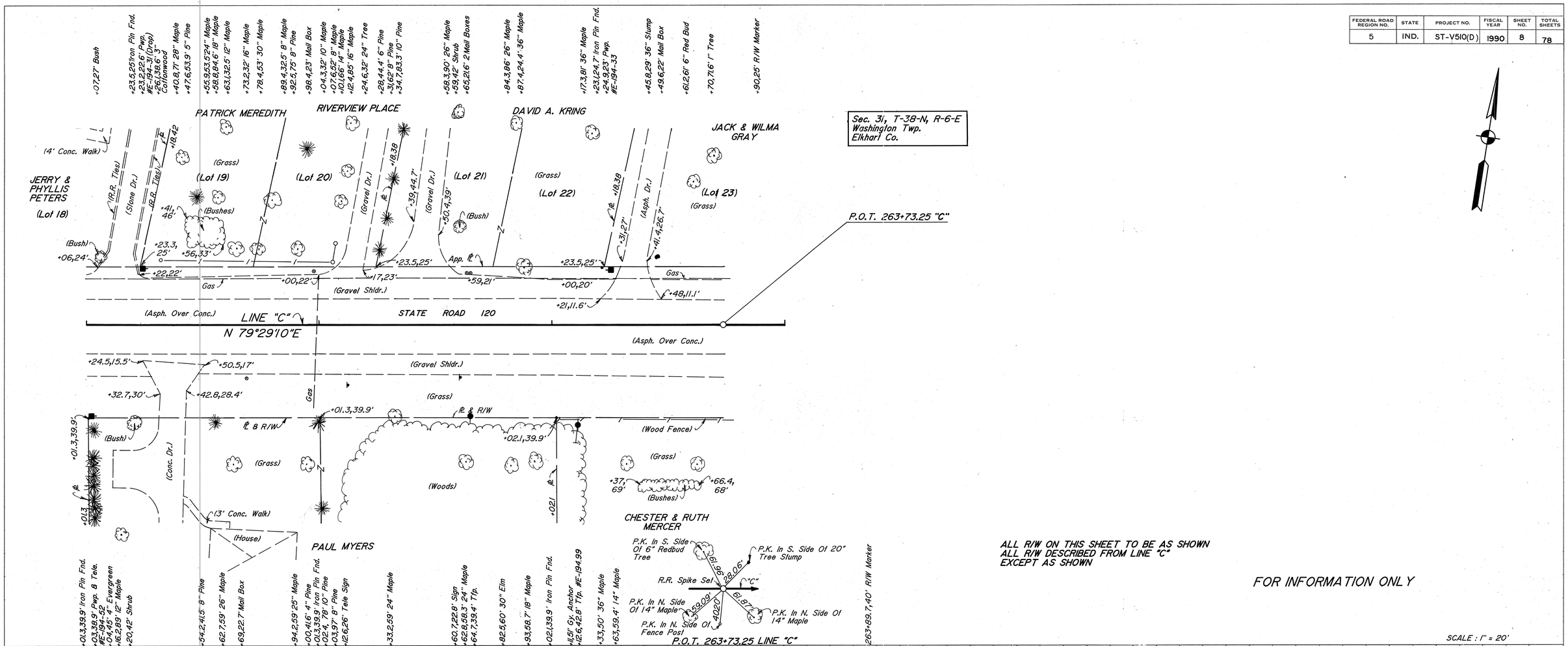

PLAN		BY
	SURVEYED	S. WILLIAMS
	PLOTTED	R. WILLING
	ALIGNMENT CHECKED	L. SUHRE
	RT. OF WAY CHECKED	R. THOMPSON
NOTE BOOK		DATE
No. 609472		6-89
		10-89
		10-89
		2-90

PROFILE		BY
	SURVEYED	S. WILLIAMS
	PLOTTED	R. WILLING
	GRADES CHECKED	L. SUHRE
	B.M. & STATIONING	S. WILLIAMS
	STRUCTURE NOTATIONS CHECKED	R. THOMPSON
NOTE BOOK		DATE
No. 609472		6-89
		10-89
		10-89
		9-89

LAWRENCE C. SUHRE REGISTERED No. 18417 STATE OF INDIANA PROFESSIONAL ENGINEER

PLATE 3 - PLAN - PROFILE B. R. R. STANDARD
1975

PROJECT NO.	LINE	SHEET NO.	TOTAL SHEETS	FILE
ST-V510(D)	"C"	8	78	

TP116

REV. 1-25-93 REV. DR. @ 48+50 RT TO 48+55 RT., W=40'

FEDERAL ROAD REGION NO.	STATE	PROJECT NO.	FISCAL YEAR	SHEET NO.	TOTAL SHEETS
5	IND.	ST-V510(D)	1990	9	78

PLAN			
NOTE BOOK No. R2094TL	SURVEYED	S. WILLIAMS	E-88
	PLOTTED	R. WILLING	E-89
	ALIGNMENT CHECKED	L. SUHRE	10-89
	RT. OF WAY CHECKED	R. THOMPSON	10-89
			2-90

PROFILE			
NOTE BOOK No. R2094TL	SURVEYED	S. WILLIAMS	E-88
	PLOTTED	R. WILLING	10-89
	GRADES CHECKED	L. SUHRE	10-89
	B.M. NOTED	S. WILLIAMS	10-89
	STRUCTURE NOTATIONS CHECKED	R. THOMPSON	9-89

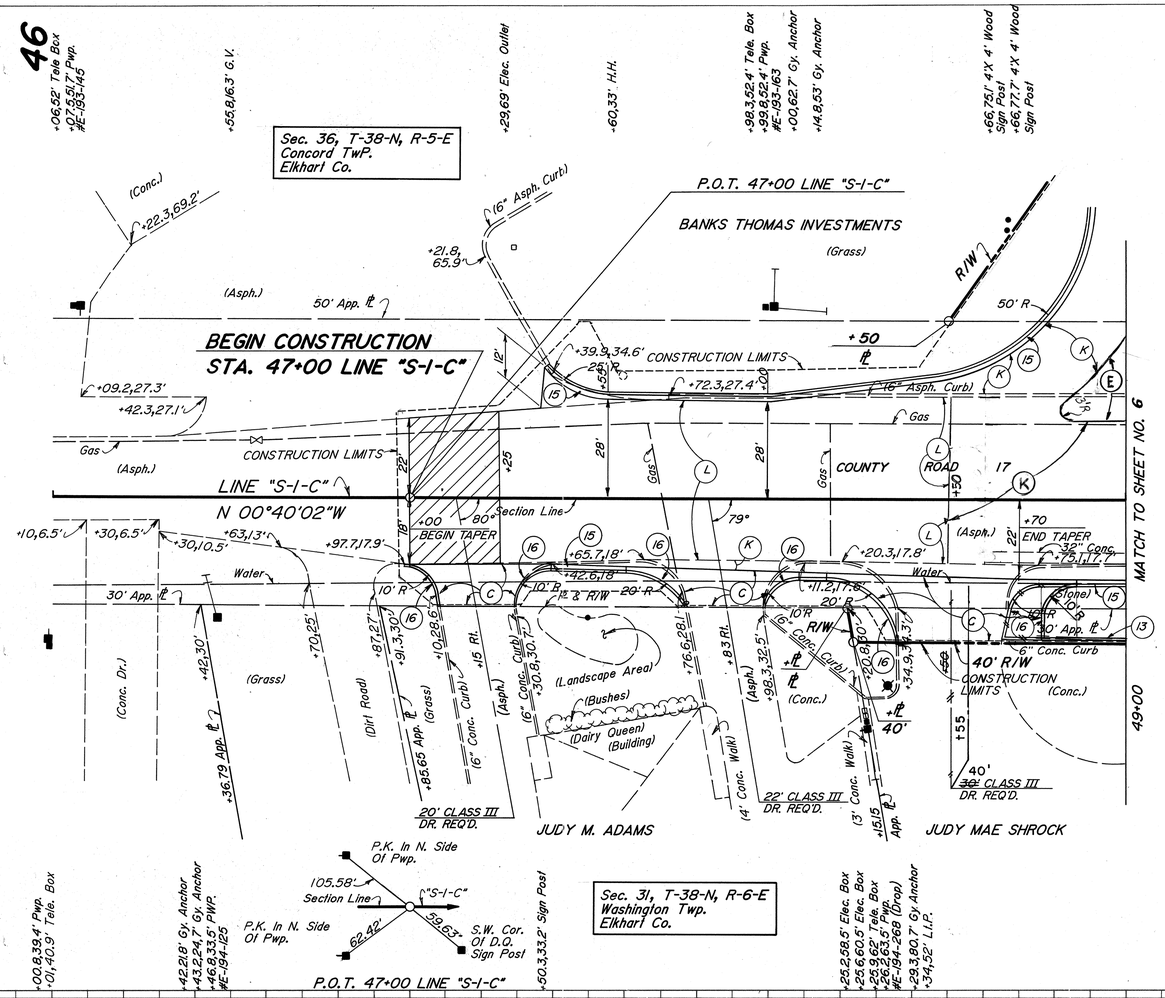

FOR LEGEND SEE SHEET NO. 4
FOR ADDITIONAL DETAILS SEE SHEET NO. 11

"ALL R/W ON THIS SHEET TO BE AS SHOWN"
"ALL R/W DESCRIBED FROM LINE "S-I-C" EXCEPT AS SHOWN"

SCALE : 1" = 20'

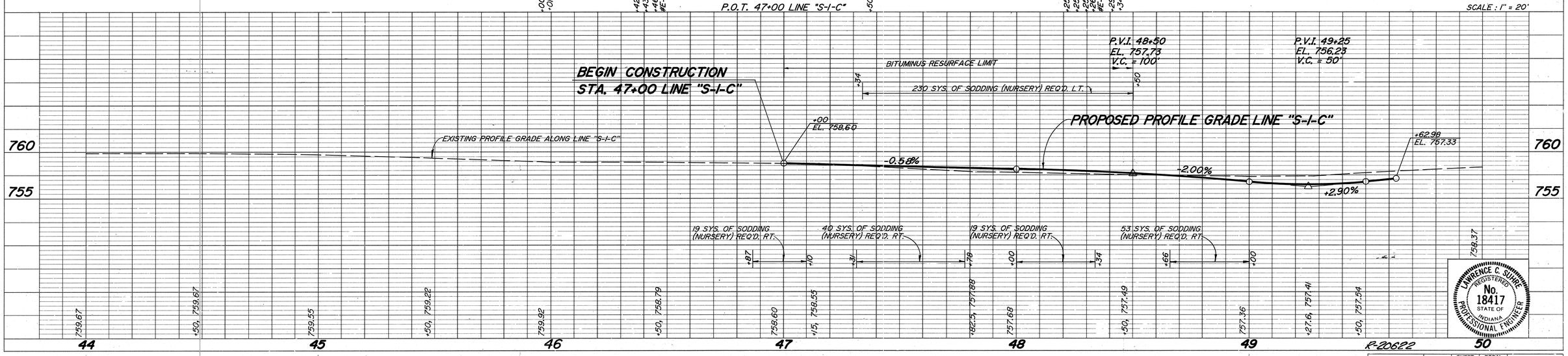

LAWRENCE C. SUHRE REGISTERED No. 18417 STATE OF INDIANA PROFESSIONAL ENGINEER

R-20622

PLATE 3 - PLAN - PROFILE B. R. R. STANDARD
1975

PROJECT NO.	LINE	SHEET NO.	TOTAL SHEETS	FILE
ST-V510(D)	"S-I-C"	9	78	

TP116

Rev 8-25-92 Added Note Not to disturb Light Pole

FEDERAL ROAD REGION NO.	STATE	PROJECT NO.	FISCAL YEAR	SHEET NO.	TOTAL SHEETS
5	IND.	ST-V510 (D)	1990	10	78

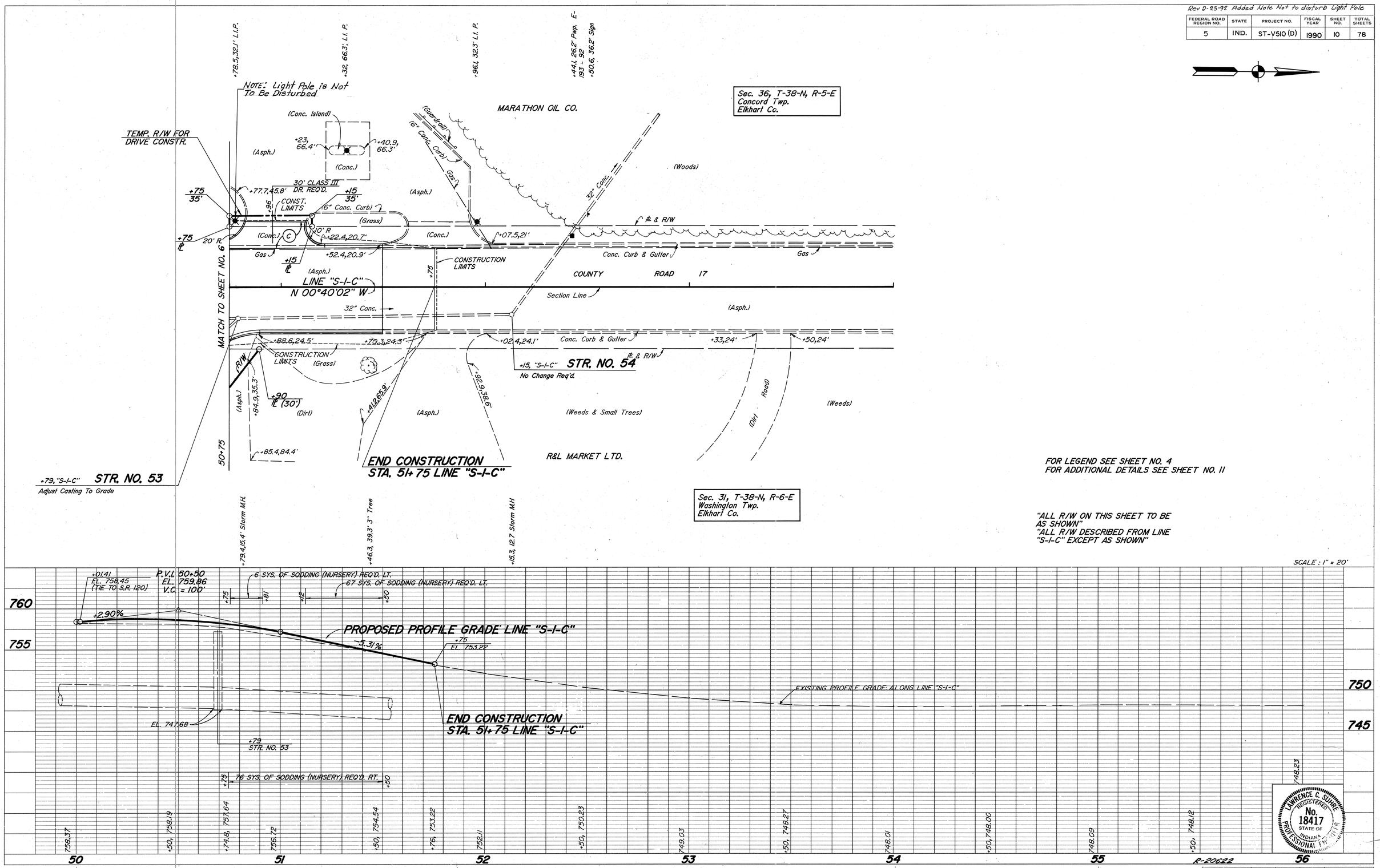

PLATE 3 - PLAN - PROFILE B. R. R. STANDARD
1975

PROJECT NO.	LINE	SHEET NO.	TOTAL SHEETS	FILE
ST-V510(D)	"S-I-C"	10	78	

TP116

REV. 3-16-93: STRS. NO. 24, 26, 27 & 31
REQUESTED BY UTILITIES TO AVOID GAS MAIN REV. 1-25-93 REV. DR. @ 48+50 RT TO 48+55 RT. W=40'

FEDERAL ROAD REGION NO.	STATE	PROJECT NO.	FISCAL YEAR	SHEET NO.	TOTAL SHEETS
5	IND.	ST-V5101(D)	1990	11	78

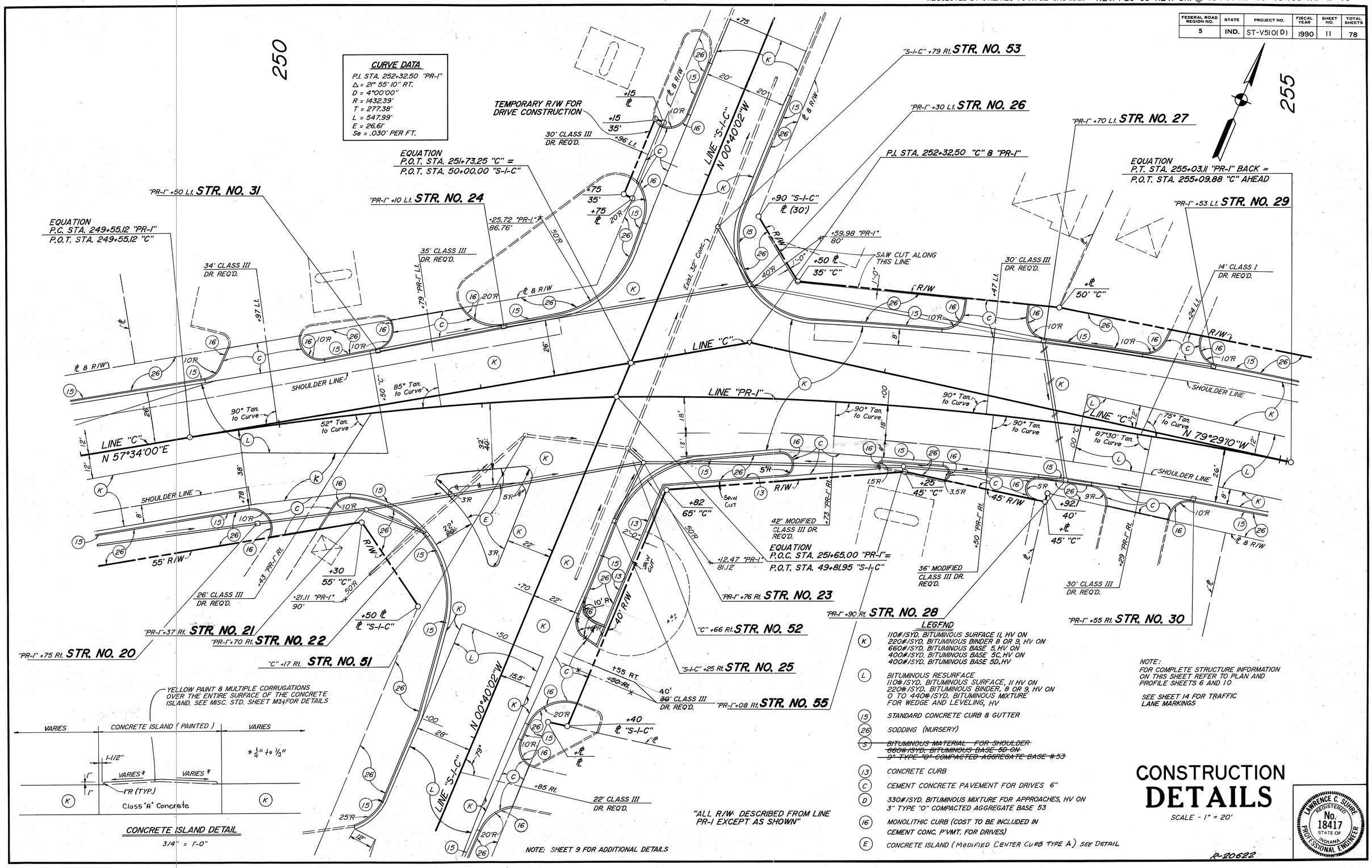

1976

SHEET 11 OF 78

TP107

CROSS SECTIONS
Scale 1 inch = 10 feet

CUT ℄ FILL

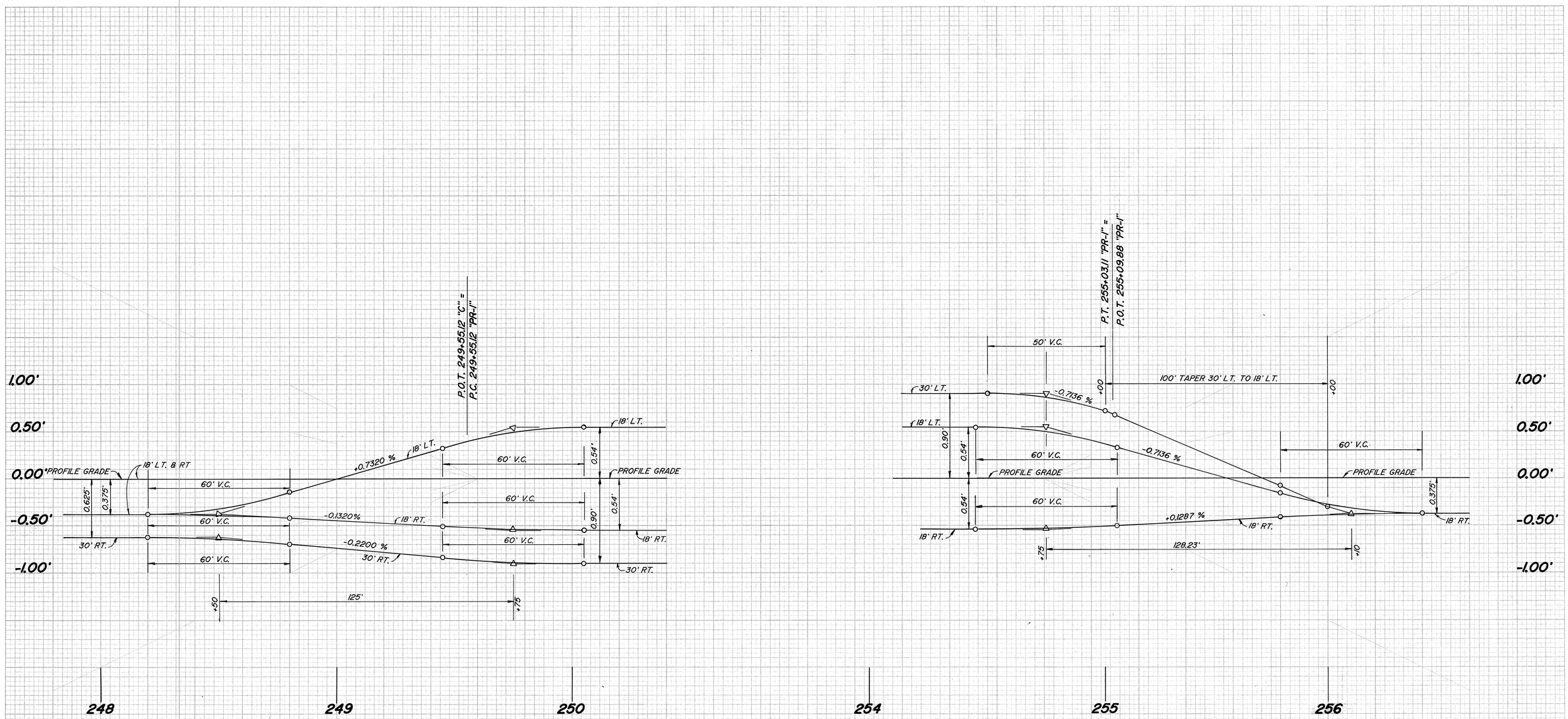

P.I. 252+32.50 "PR-1"
Degree of Curve = 4° Rt.
Se = 0.30'

SUPERELEVATION TRANSITION DIAGRAM

SCALE : HORIZ. 1" = 20'
VERT. 1" = 0.50'

R-20622

PLATE 3

September, 1973

LEVEL BOOK NO.				FILE	
FEDERAL ROAD REGION NO.	STATE	PROJECT NO.	FISCAL YEAR	SHEET NO.	TOTAL SHEETS
5	IND.	ST-V510(D)	1990	12	78
			LINE		

TP122

FEDERAL ROAD REGION NO.	STATE	PROJECT NO.	FISCAL YEAR	SHEET NO.	TOTAL SHEETS
5	IND.	ST-V510(D)	1990	13	78

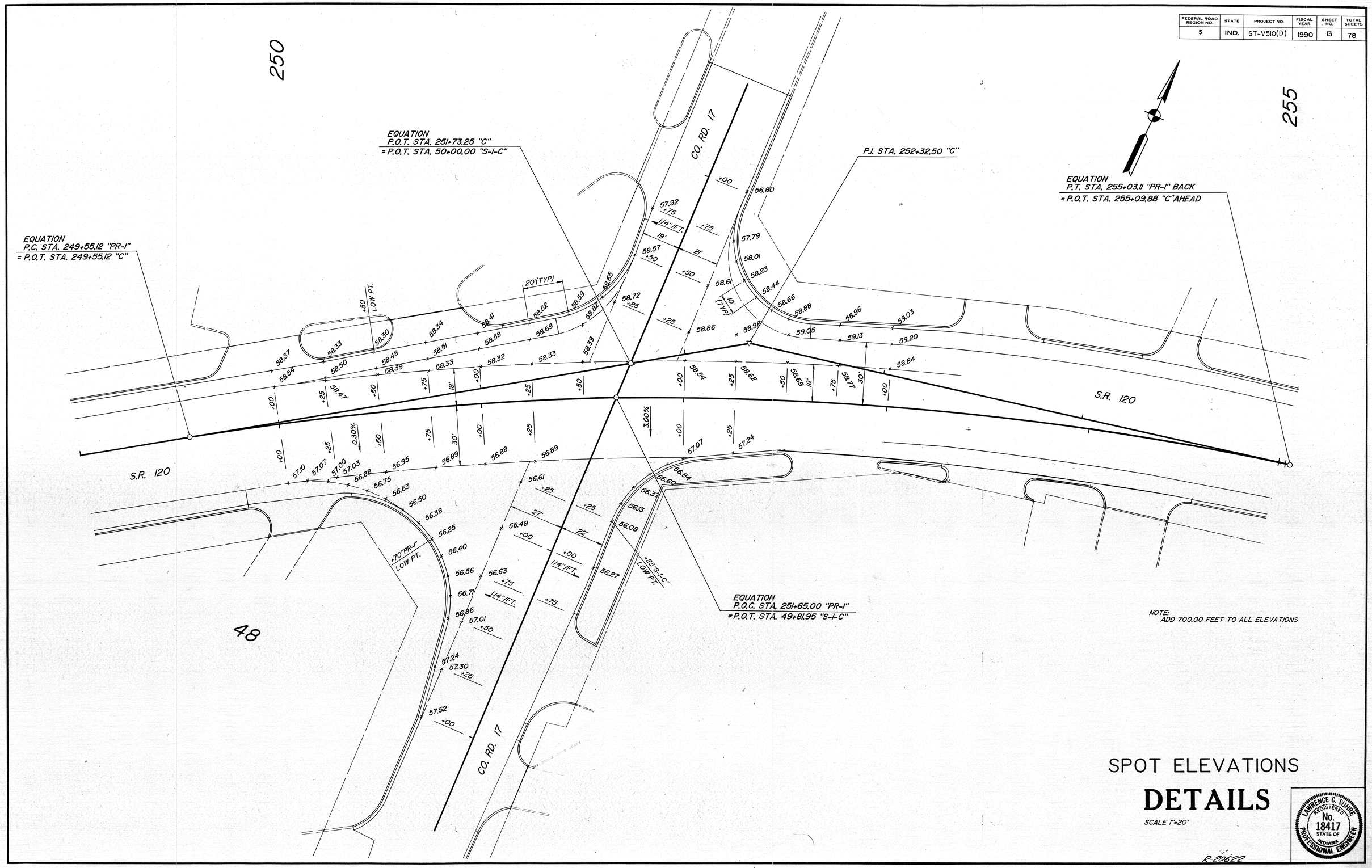

NOTE:
ADD 700.00 FEET TO ALL ELEVATIONS

SPOT ELEVATIONS

DETAILS

SCALE 1"=20'

LAWRENCE C. SUHRE
REGISTERED
No. 18417
STATE OF INDIANA
PROFESSIONAL ENGINEER

R-20622

FEDERAL ROAD REGION NO.	STATE	PROJECT NO.	FISCAL YEAR	SHEET NO.	TOTAL SHEETS
5	IND.	ST-V510(D)	1990	14	78

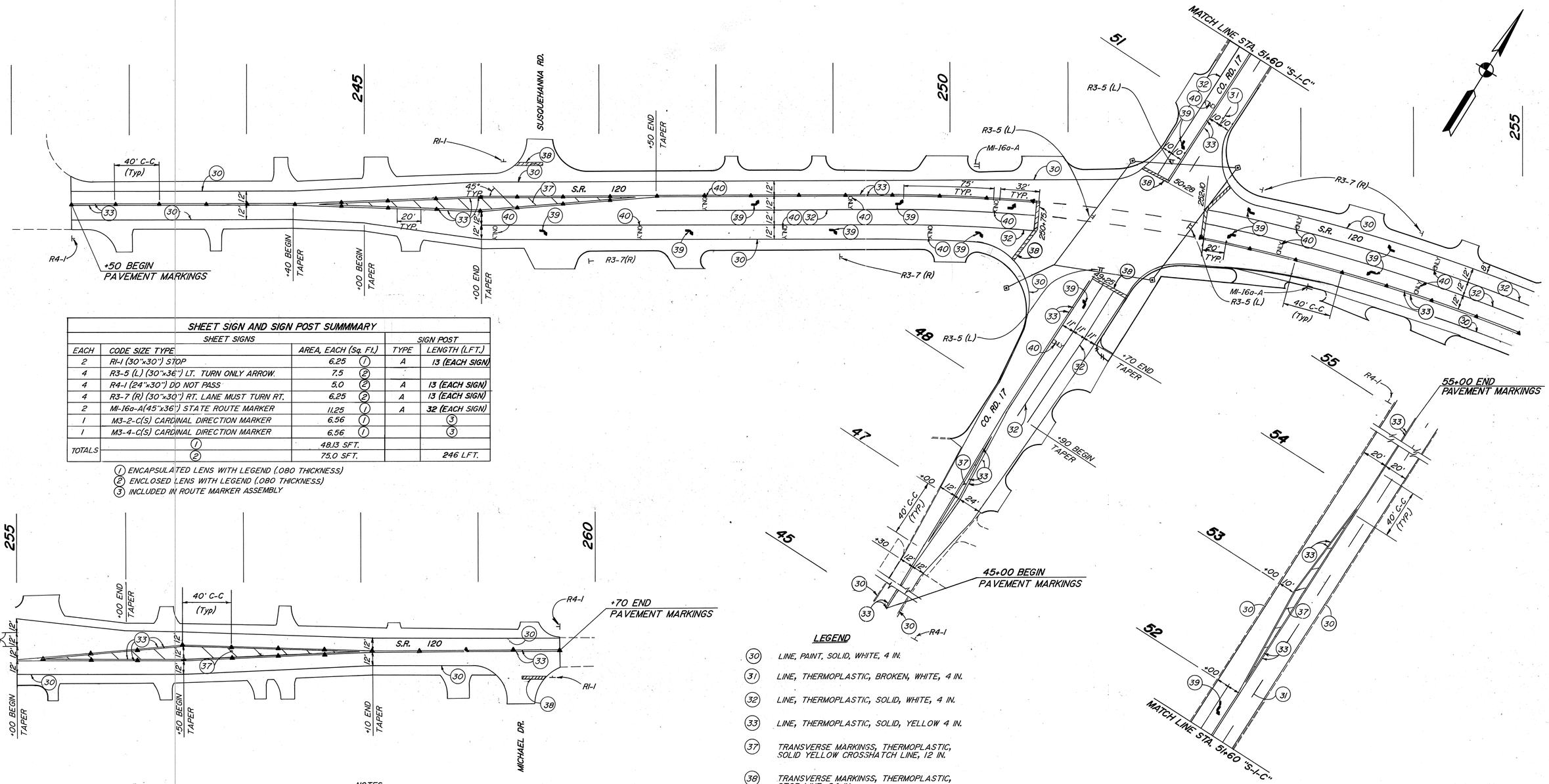

SHEET SIGN AND SIGN POST SUMMARY

SHEET SIGNS				SIGN POST	
EACH	CODE SIZE TYPE	AREA, EACH (Sq. Ft.)		TYPE	LENGTH (L.F.T.)
2	R1-1 (30"x30") STOP	6.25	1	A	13 (EACH SIGN)
4	R3-5 (L) (30"x36") LT. TURN ONLY ARROW.	7.5	2		
4	R4-1 (24"x30") DO NOT PASS	5.0	2	A	13 (EACH SIGN)
4	R3-7 (R) (30"x30") RT. LANE MUST TURN RT.	6.25	2	A	13 (EACH SIGN)
2	M1-16a-A(45"x36") STATE ROUTE MARKER	11.25	1	A	32 (EACH SIGN)
1	M3-2-C(S) CARDINAL DIRECTION MARKER	6.56	1		3
1	M3-4-C(S) CARDINAL DIRECTION MARKER	6.56	1		3
TOTALS		48.13 SFT.	1		
		75.0 SFT.	2		246 LFT.

1 ENCAPSULATED LENS WITH LEGEND (.080 THICKNESS)
2 ENCLOSED LENS WITH LEGEND (.080 THICKNESS)
3 INCLUDED IN ROUTE MARKER ASSEMBLY

NOTES:

1. REMOVAL OF SNOWPLOWABLE RAISED PAVEMENT MARKERS SHALL BE AS DIRECTED BY THE ENGINEER. SNOWPLOWABLE RAISED PAVEMENT MARKERS TO BECOME PROPERTY OF THE STATE AFTER REMOVAL. ITEM TO BE PAID FOR AS "REMOVAL OF SNOWPLOWABLE RAISED PAVEMENT MARKERS".

2. FOR ADDITIONAL INFORMATION SEE SPECIAL PROVISIONS.

LEGEND

- 30 LINE, PAINT, SOLID, WHITE, 4 IN.
- 31 LINE, THERMOPLASTIC, BROKEN, WHITE, 4 IN.
- 32 LINE, THERMOPLASTIC, SOLID, WHITE, 4 IN.
- 33 LINE, THERMOPLASTIC, SOLID, YELLOW 4 IN.
- 37 TRANSVERSE MARKINGS, THERMOPLASTIC, SOLID YELLOW CROSSHATCH LINE, 12 IN.
- 38 TRANSVERSE MARKINGS, THERMOPLASTIC, STOP LINE, 24 IN.
- 39 TRANSVERSE MARKINGS, THERMOPLASTIC, LANE INDICATION ARROW
- 40 TRANSVERSE MARKINGS, THERMOPLASTIC, WORD (ONLY)
- ▲ SNOWPLOWABLE RAISED PAVEMENT MARKERS, YELLOW, TWO-DIRECTIONAL
- ⊢ GROUND MOUNTED SIGN
- ⊨ OVERHEAD MOUNTED SIGN

PAVEMENT MARKINGS & SIGNS

DETAILS

SCALE 1" = 40'.

LAWRENCE C. SUHRE REGISTERED No. 18417 STATE OF INDIANA PROFESSIONAL ENGINEER

P-20622

FEDERAL ROAD REGION NO.	STATE	PROJECT NO.	FISCAL YEAR	SHEET NO.	TOTAL SHEETS
5	IND.	ST-V510(D)	1990	15	78

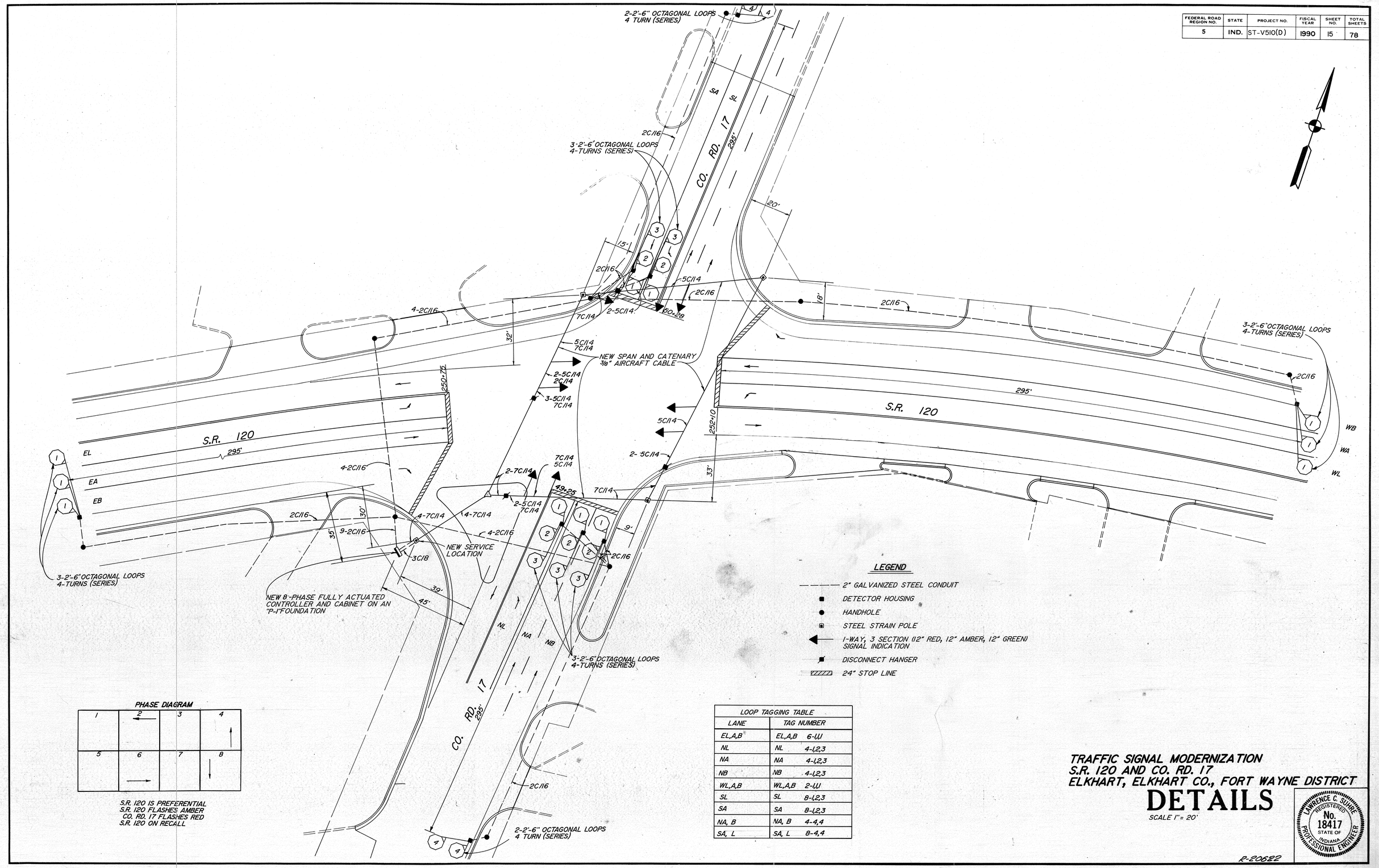

LOOP TAGGING TABLE		
LANE	TAG NUMBER	
EL,A,B	EL,A,B	6-1,1,1
NL	NL	4-1,2,3
NA	NA	4-1,2,3
NB	NB	4-1,2,3
WL,A,B	WL,A,B	2-1,1,1
SL	SL	8-1,2,3
SA	SA	8-1,2,3
NA, B	NA, B	4-4,4
SA, L	SA, L	8-4,4

TRAFFIC SIGNAL MODERNIZATION
S.R. 120 AND CO. RD. 17
ELKHART, ELKHART CO., FORT WAYNE DISTRICT

DETAILS

SCALE 1" = 20'

LAWRENCE C. SCHREE
REGISTERED
No. 18417
STATE OF INDIANA
PROFESSIONAL ENGINEER

R-20622

1976

SHEET 15 OF 78

TP107

FEDERAL ROAD REGION NO.	STATE	PROJECT NO.	FISCAL YEAR	SHEET NO.	TOTAL SHEETS
5	IND.	ST-V510(D)	1990	16	78

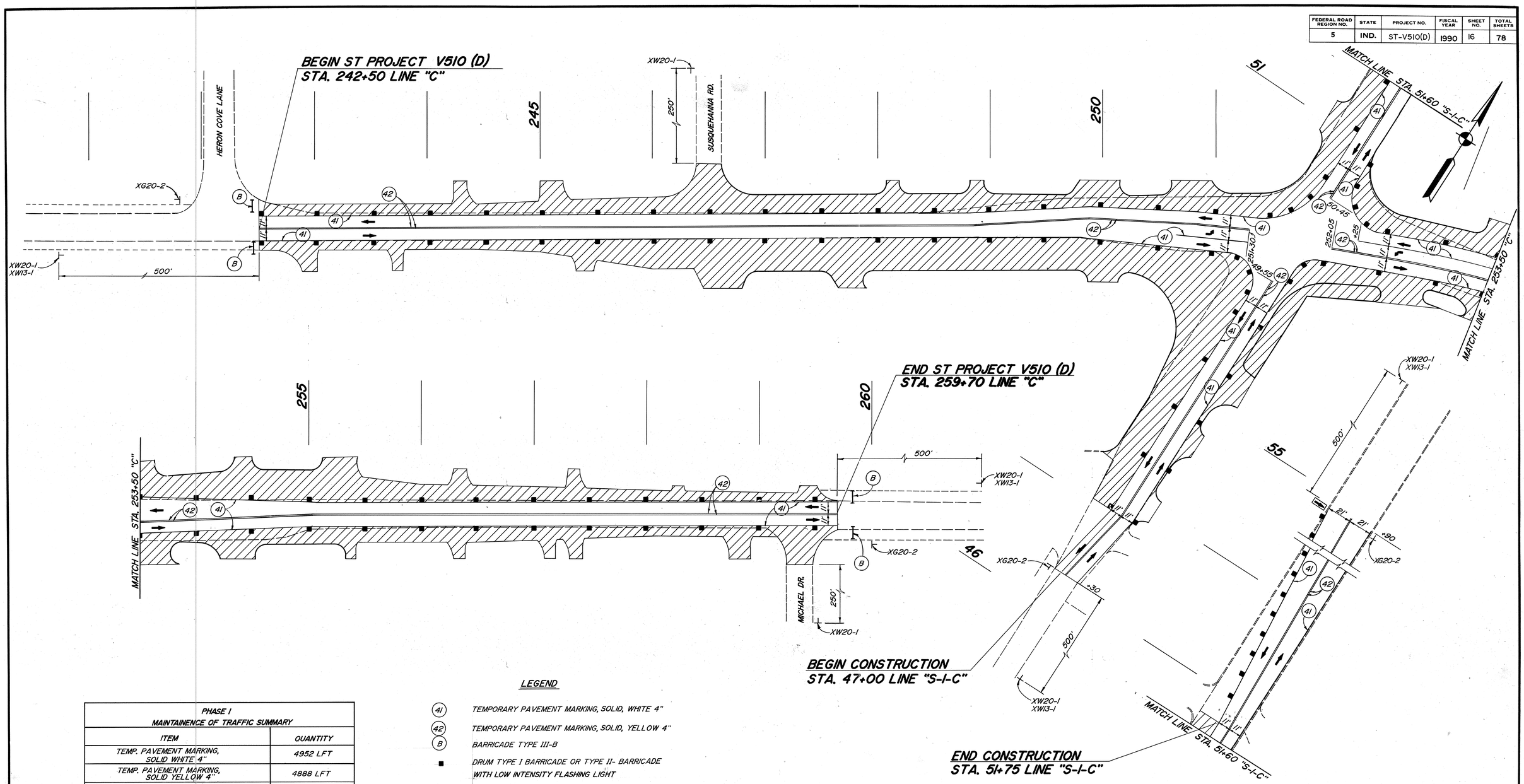

PHASE I MAINTAINENCE OF TRAFFIC SUMMARY	
ITEM	QUANTITY
TEMP. PAVEMENT MARKING, SOLID WHITE 4"	4952 LFT
TEMP. PAVEMENT MARKING, SOLID YELLOW 4"	4888 LFT
BARRICADE TYPE III-B	4 EA.
ROAD CONSTRUCTION AHEAD SIGN	6 EA.
SPEED REGULATORY SIGN	4 EA.
END CONSTRUCTION SIGN	4 EA.

LEGEND

- (41) TEMPORARY PAVEMENT MARKING, SOLID, WHITE 4"
- (42) TEMPORARY PAVEMENT MARKING, SOLID, YELLOW 4"
- (B) BARRICADE TYPE III-B
- ■ DRUM TYPE I BARRICADE OR TYPE II- BARRICADE WITH LOW INTENSITY FLASHING LIGHT
- FLASHING ARROW SIGN
- XW20-1 ROAD CONSTRUCTION AHEAD 48"x48"
- XW13-1 SPEED REGULATORY SIGN 18"x18"
- XG20-2 END CONSTRUCTION
- TO BE CONSTRUCTED DURING THIS PHASE

NOTE:
FOR ADDITIONAL INFORMATION
SEE SPECIAL PROVISIONS

PHASE I
TRAFFIC MAINTENANCE
DETAILS

SCALE 1" = 40'

LAWRENCE C. SUHRE REGISTERED No. 18417 STATE OF INDIANA PROFESSIONAL ENGINEER

R-20622

FEDERAL ROAD REGION NO.	STATE	PROJECT NO.	FISCAL YEAR	SHEET NO.	TOTAL SHEETS
5	IND.	ST-V510(D)	1990	17	78

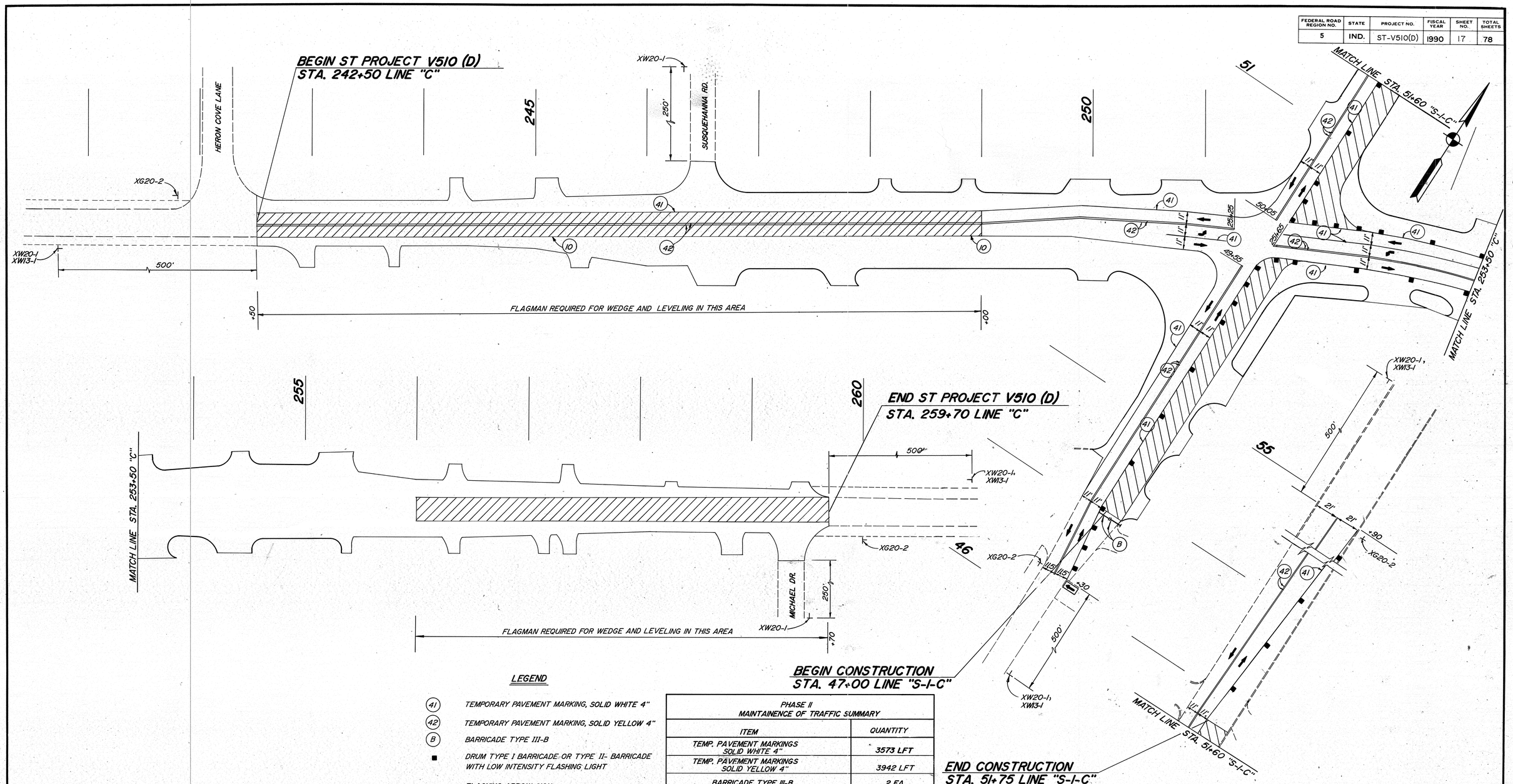

LEGEND

41	TEMPORARY PAVEMENT MARKING, SOLID WHITE 4"
42	TEMPORARY PAVEMENT MARKING, SOLID YELLOW 4"
B	BARRICADE TYPE III-B
■	DRUM TYPE I BARRICADE OR TYPE II- BARRICADE WITH LOW INTENSITY FLASHING LIGHT
▭	FLASHING ARROW SIGN
XW20-1	ROAD CONSTRUCTION AHEAD 48"x48"
XW13-1	SPEED REGULATORY SIGN 18"x18"
XG20-2	END CONSTRUCTION
▨	TO BE CONSTRUCTED DURING THIS PHASE

PHASE II MAINTAINENCE OF TRAFFIC SUMMARY	
ITEM	QUANTITY
TEMP. PAVEMENT MARKINGS SOLID WHITE 4"	3573 LFT
TEMP. PAVEMENT MARKINGS SOLID YELLOW 4"	3942 LFT
BARRICADE TYPE III-B	2 EA.
FLASHING ARROW SIGN	60 DAYS
ROAD CONSTRUCTION AHEAD SIGN	6 EA.
SPEED REGULATORY SIGN	4 EA.
END CONSTRUCTION SIGN	4 EA.

NOTE: FOR ADDITIONAL INFORMATION, SEE SPECIAL PROVISIONS

PHASE II TRAFFIC MAINTENANCE DETAILS

SCALE 1" = 40'

LAWRENCE C. SUHRE REGISTERED No. 18417 STATE OF INDIANA PROFESSIONAL ENGINEER

R-20622

FEDERAL ROAD REGION NO.	STATE	PROJECT NO.	FISCAL YEAR	SHEET NO.	TOTAL SHEETS
5	IND.	ST-V510(D)	1990	18	78

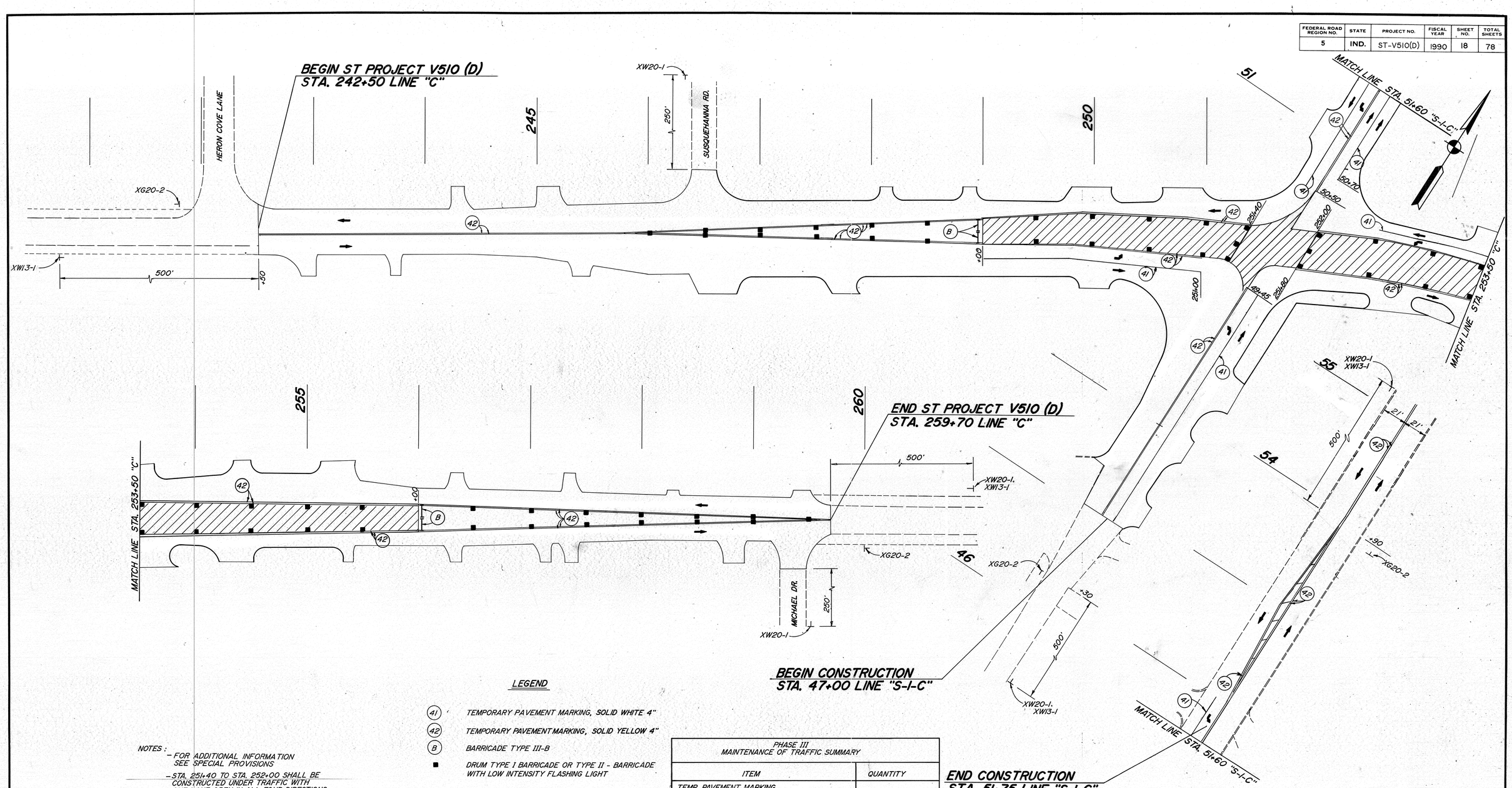

LEGEND

41	TEMPORARY PAVEMENT MARKING, SOLID WHITE 4"
42	TEMPORARY PAVEMENT MARKING, SOLID YELLOW 4"
B	BARRICADE TYPE III-B
■	DRUM TYPE I BARRICADE OR TYPE II - BARRICADE WITH LOW INTENSITY FLASHING LIGHT
⇨	FLASHING ARROW SIGN
XW20-1	ROAD CONSTRUCTION AHEAD 48 x 48"
XW13-1	SPEED REGULATORY SIGN 18" x 18"
XG20-2	END CONSTRUCTION
▨	TO BE CONSTRUCTED DURING THIS PHASE

NOTES:
- FOR ADDITIONAL INFORMATION SEE SPECIAL PROVISIONS
- STA. 251+40 TO STA. 252+00 SHALL BE CONSTRUCTED UNDER TRAFFIC WITH ONE LANE OPEN IN ALL FOUR DIRECTIONS AT ALL TIMES

PHASE III
MAINTENANCE OF TRAFFIC SUMMARY

ITEM	QUANTITY
TEMP. PAVEMENT MARKING SOLID WHITE 4"	785 LFT.
TEMP. PAVEMENT MARKING SOLID YELLOW 4"	8760 LFT.
BARRICADE TYPE III-B	4 EA.
ROAD CONSTRUCTION AHEAD SIGN	5 EA.
SPEED REGULATORY SIGN	4 EA.
END CONSTRUCTION	4 EA.

PHASE III
TRAFFIC MAINTENANCE
DETAILS

SCALE 1" = 40'

LAWRENCE C. SUHR REGISTERED No 18417 STATE OF INDIANA PROFESSIONAL ENGINEER

R-20622

FEDERAL RD. REGION NO.	STATE	PROJECT NO.	FISCAL YEAR	SHEET NO.	TOTAL SHEETS
5	IND.	ST-V5 10(D)	1990	19	78

TYPICAL SLOT PLAN (TWO LANES)

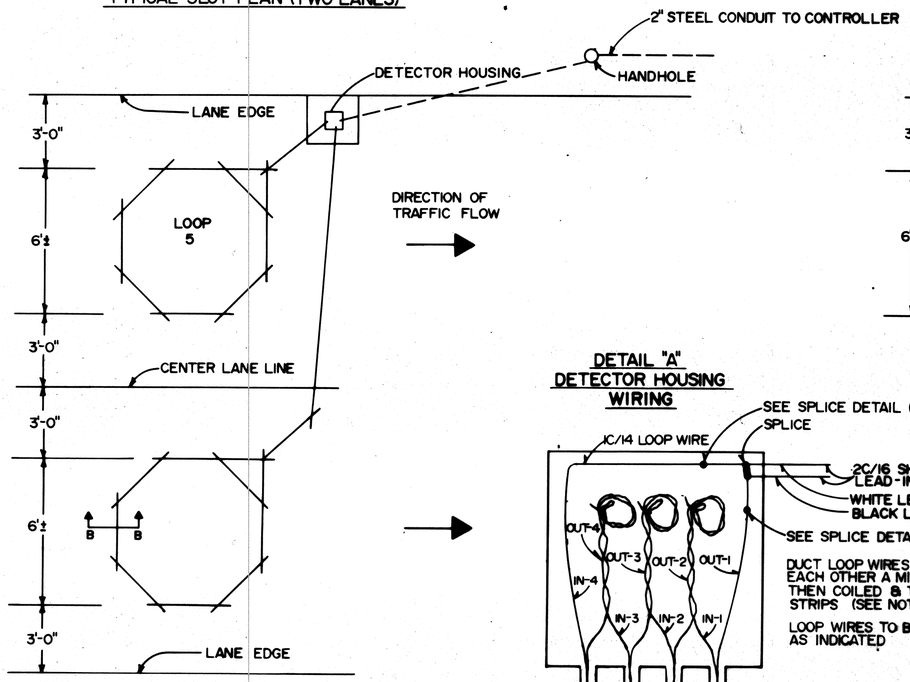

TYPICAL SLOT PLAN (ONE LANE)

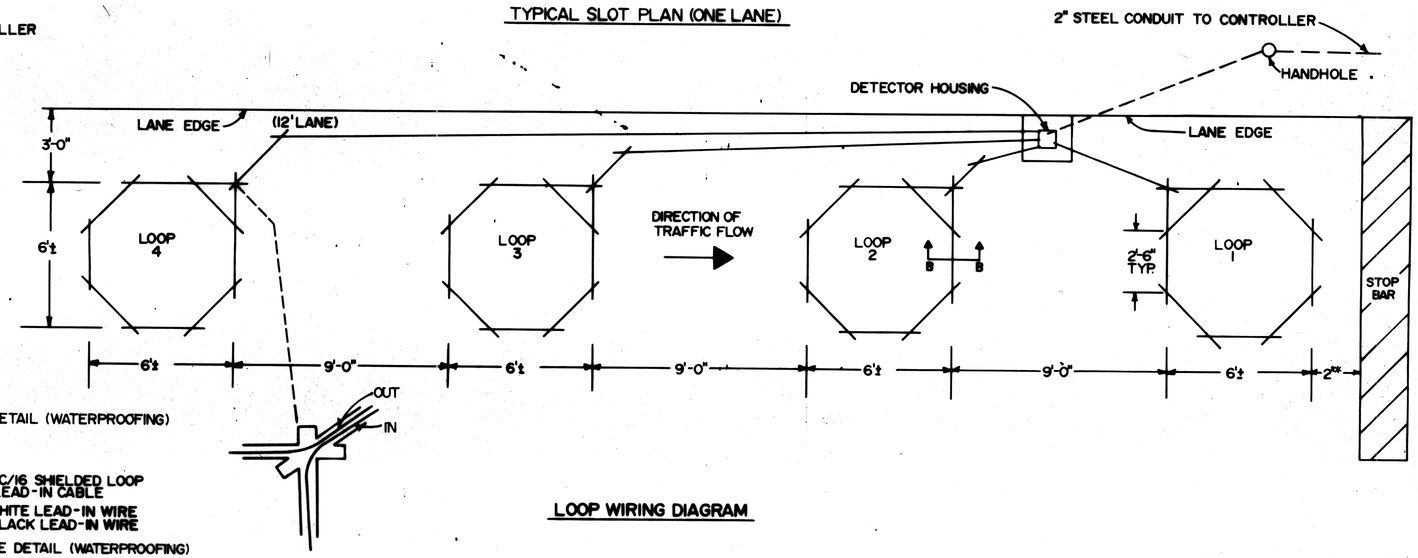

DETAIL "A" DETECTOR HOUSING WIRING

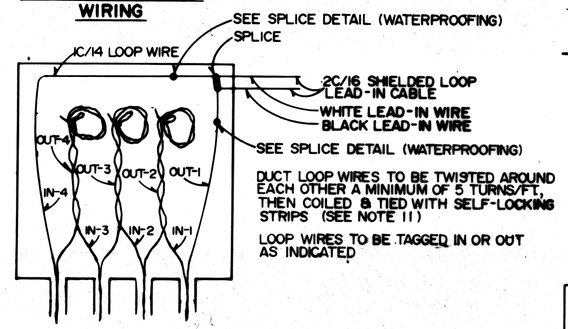

LOOP WIRING DIAGRAM

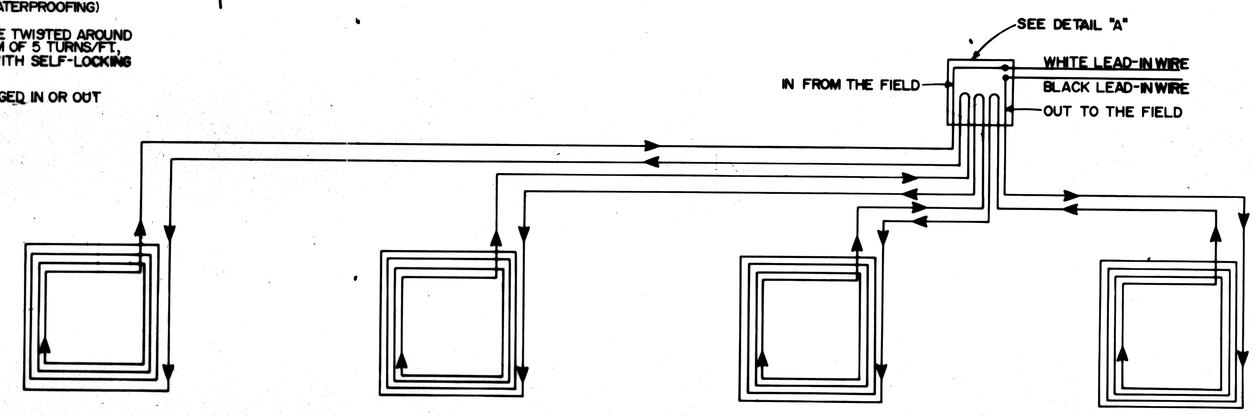

LOOP SAW SLOT DETAIL
SECTION "B-B"

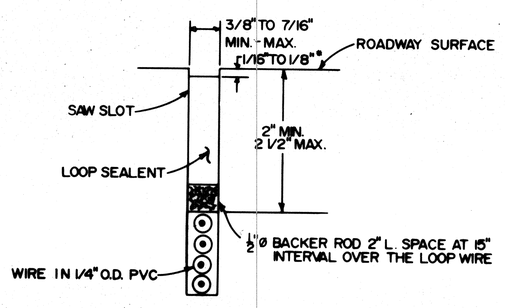

* FOR ONE PART SEALANT.
FLUSH FOR TWO PART SEALANT.

1. LOOP SAW-CUTS AS SHOWN ON PLAN SHEETS ARE TO BE CONSIDERED AS SCHEMATIC ONLY. IN THE EVENT OF DISCREPANCIES THIS DETAIL SHALL GOVERN.
2. AT NO TIME SHALL THE LOOP WIRE BE BENT AT ANGLES LESS THAN 120°.
3. LOOP SPACING SHOULD BE ADJUSTED TO AVOID PAVEMENT JOINTS.
4. OVERLAP CUTS SO THAT SAW-SLOT AT CORNER HAS FULL DEPTH.
5. ALL LOOPS ARE TO BE WIRED CLOCKWISE. (VIEWED FROM ABOVE)
6. PRESS LOOP WIRE INTO LOOP SAW SLOT WITH NON-METALLIC OBJECT.
7. SEE PLAN SHEETS FOR NUMBER, SIZE, ARRANGEMENT AND LOCATION OF LOOPS.
8. LOOPS ARE TO BE WIRED WITH 4 TURNS UNLESS OTHERWISE NOTED.
9. LOOPS ARE TO BE WIRED IN SERIES UNLESS OTHERWISE NOTED.
10. BLACK LEAD IN WIRE TO BE SPLICED TO LOOP WIRE GOING TO THE FIELD (TAGGED OUT/LOOP #). WHITE LEAD IN WIRE TO BE SPLICED TO LOOP WIRE COMING FROM THE FIELD (TAGGED IN/LOOP #).
11. A MAXIMUM OF 18" & MINIMUM OF 12" OF LOOP WIRE DUCT WILL BE ALLOWED IN THE DETECTOR HOUSING FOR EACH LOOP LEAD.

*12. THIS DISTANCE IS TYPICAL. DEPENDING ON THE INTERSECTION GEOMETRICS, A LOOP CAN BE SAWED IN FRONT OF THE STOP BAR.

13. THE SAW-CUT FROM THE DETECTOR HOUSING TO THE LOOP WINDING IS NOT TO CROSS ANY OTHER SAW-CUT.

STATE OF INDIANA

TRAFFIC SIGNAL DETAILS

LOOP INSTALLATION 1 OF 2

ENGINEER OF SIGNAL DESIGN DATE

ALFREDO E. HANZI REGISTERED No. 20657 STATE OF INDIANA PROFESSIONAL ENGINEER

R-20622

FEDERAL ROAD REGION NO.	STATE	PROJECT NO.	FISCAL YEAR	SHEET NO.	TOTAL SHEETS
5	IND.	ST-V5 10(D)	1990	20	78

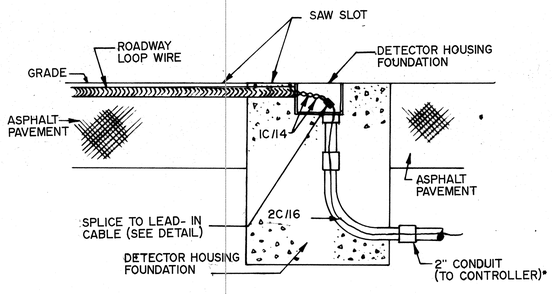

CROSS SECTION FOR NON-CURBED SECTIONS WITH ASPHALT PAVEMENT

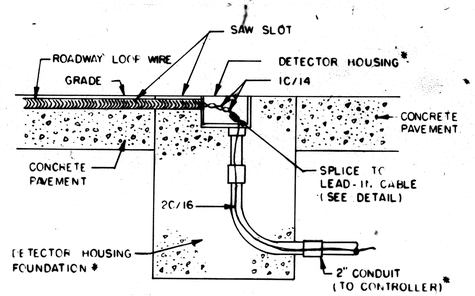

CROSS SECTION FOR NON-CURBED SECTIONS WITH CONCRETE PAVEMENT

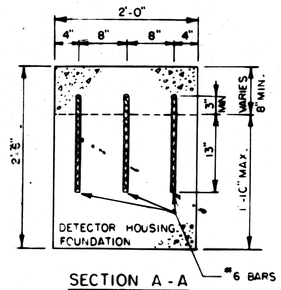

SECTION A - A

NOTE: DO NOT USE TIED-JOINT CONSTRUCTION FOR CONCRETE PAVEMENTS LESS THAN "8" THICK.

NO SEPARATE PAYMENT TO BE MADE FOR REINFORCING STEEL.

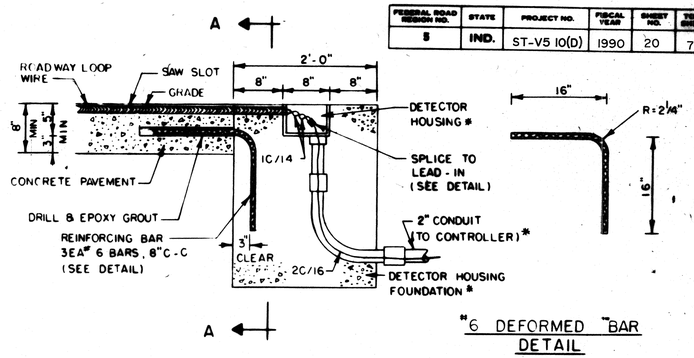

#6 DEFORMED BAR DETAIL

CONSTRUCTION DETAIL: TIED-JOINT ABUTTING CONCRETE PAVEMENT

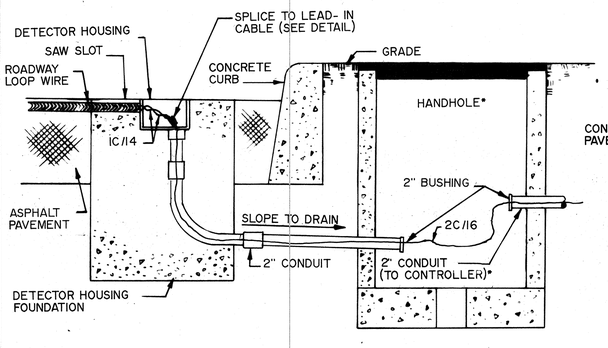

CROSS SECTION FOR CONCRETE CURB SECTIONS WITH ASPHALT PAVEMENT

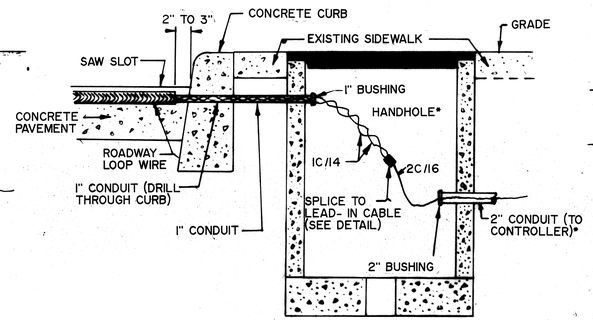

CROSS SECTION FOR CONCRETE CURB SECTIONS WITH CONCRETE PAVEMENT

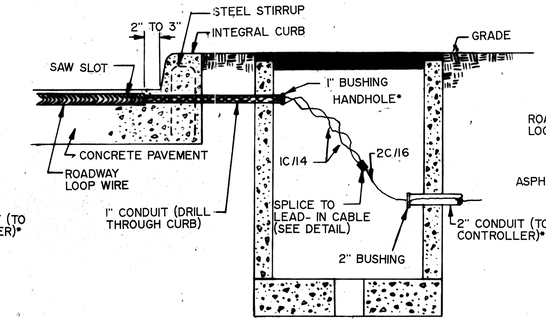

CROSS SECTION FOR INTEGRAL CURB SECTIONS

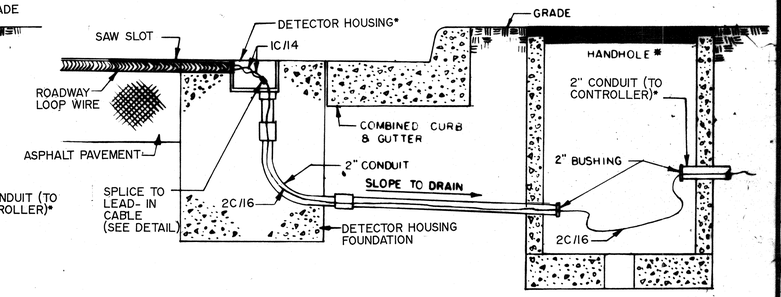

CROSS SECTION FOR COMBINED CURB & GUTTER SECTIONS

SPLICE DETAIL

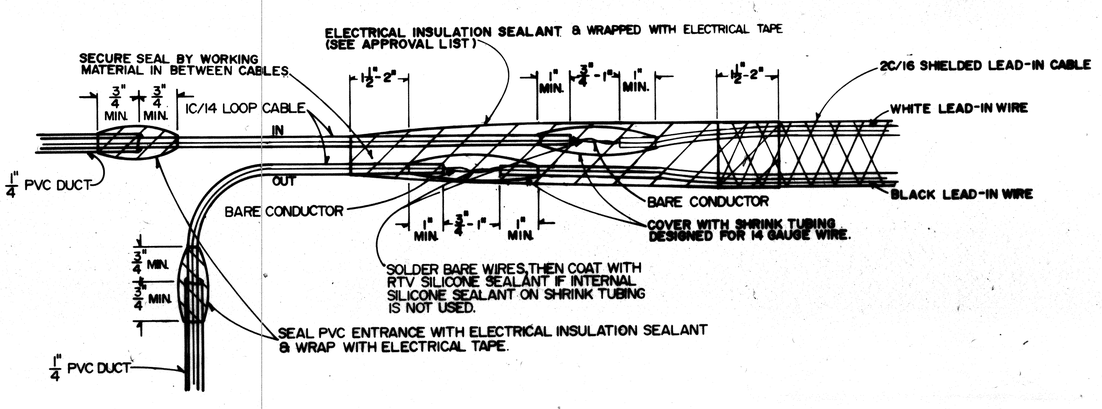

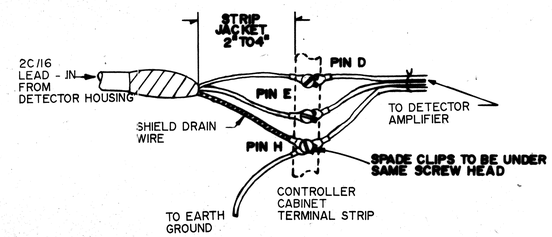

LOOP LEAD - IN CONTROLLER CABINET CONNECTION DETAIL

GENERAL NOTES:

(1) INDUCTANCE LOOPS ARE TO BE WIRED IN SERIES AT DETECTOR HOUSING UNLESS SHOWN OTHERWISE ON PLANS.

(2) SEE PLANS FOR NUMBER OF TURNS OF WIRE REQUIRED FOR EACH INDUCTANCE LOOP.

(3) SEE PLANS FOR NUMBER, SIZE, ARRANGEMENT, AND LOCATION OF INDUCTANCE LOOP DETECTORS.

(4) SEE LOOP INSTALLATION DETAILS SHEET 1 FOR ADDITIONAL DETAILS

* TO BE PLACED AS SHOWN ON THE PLANS.

STATE OF INDIANA

TRAFFIC SIGNAL DETAILS

LOOP INSTALLATION 2 OF 2

Alfredo Franco

ENGINEER OF SIGNAL DESIGN DATE

ALFREDO G. FRANCO REGISTERED No 20657 STATE OF INDIANA PROFESSIONAL ENGINEER

FEDERAL ROAD REGION NO.	STATE	PROJECT NO.	FISCAL YEAR	SHEET NO.	TOTAL SHEETS
5	IND.	ST-510(D)	1991	20A	78

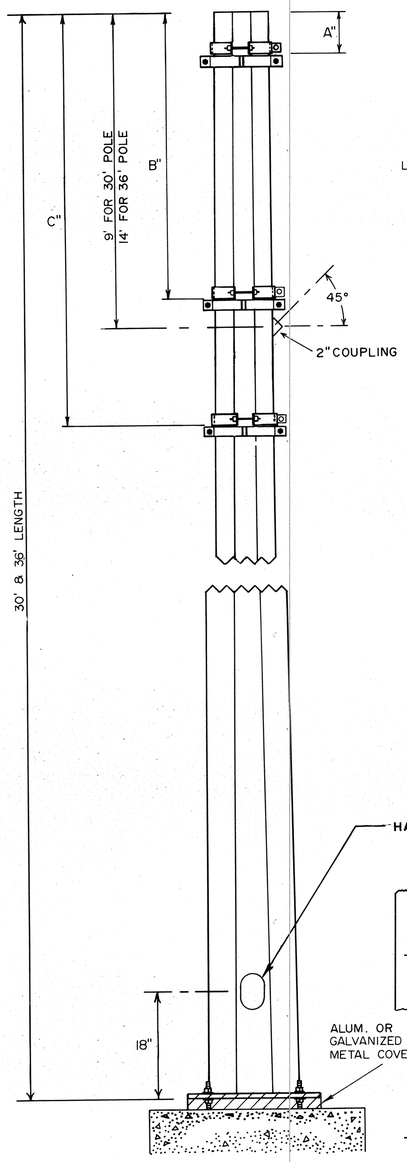

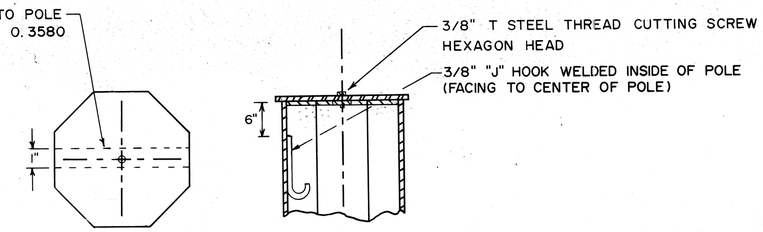

TOP OF STEEL STRAIN POLE

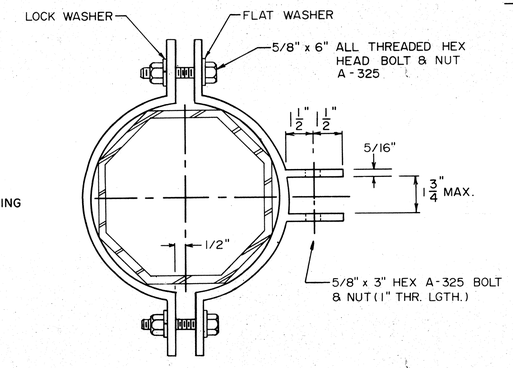

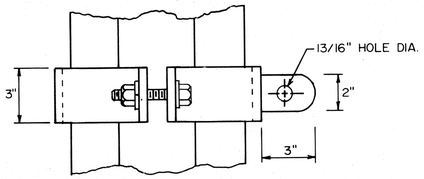

POLE BAND

REQ'S 2 POLE BANDS AT EACH POSITION ON POLE (6 BANDS PER POLE)

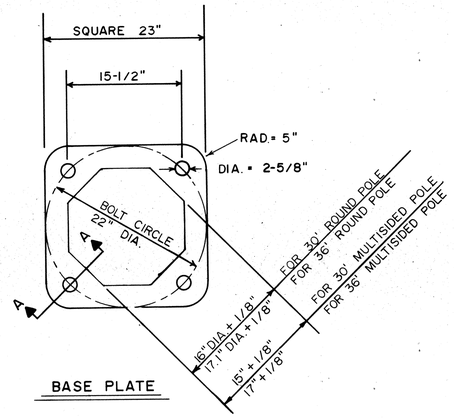

BASE PLATE

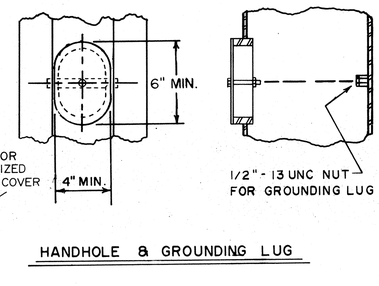

HANDHOLE & GROUNDING LUG

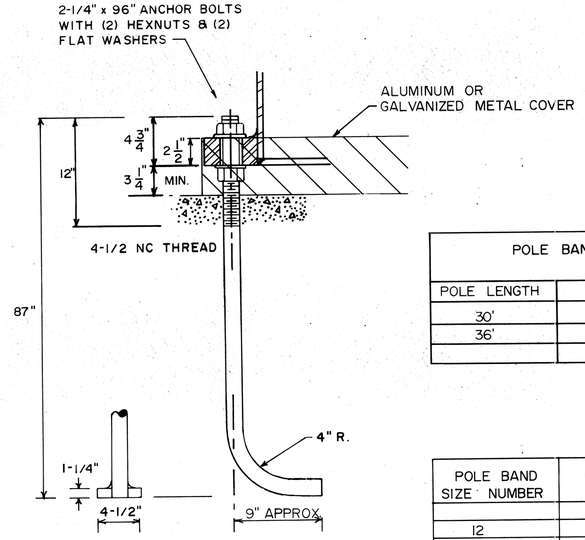

ALTERNATIVE

1-1/4" x 4-1/2" SQ. PL. TAPPED & WELDED TO ANCHOR BOLT

SECTION A-A

SPECIFICATIONS

POLE:

TAPERED POLE 0.14" PER FOOT OF LENGTH
LOAD DESIGN 8000 lbs. APPLIED VERTICAL TO POLE AXIS 18" BELOW TOP OF POLE
MAXIMUM DEFLECTION 0.16 OF AN INCH PER 100 lbs OF LOAD
MATERIALS ASTM 572 OR ASTM A 595 (ROUND POLE) MINIMUM YIELD STRENGTH 50 ksi GALVANIZING AFTER FABRICATED ACCORDING WITH ASTM-A 123

BASE PLATE:

SHALL DEVELOP FULL STRENGTH OF POLE
MATERIALS ASTM A 36, ASTM A 572 OR ASTM A 588

POLE BANDS:

SHALL WITHSTAND POLE LOAD DESIGN.
EACH HALF OF BAND SHALL BE STAMPED W/ CORRE. SIZE NUMBER.
MATERIALS ASTM A 572 OR ASTM A 606 MINIMUM YIELD STRENGTH 50 ksi

HARDWARE:

MATERIALS SHALL CONFORM TO ASTM A 307 GALVANIZING ACCORDING TO ASTM A 153 OR MECHANICAL GALVANIZED

ANCHOR BOLTS:

MATERIAL SHALL CONFORM TO ASTM A 576, ASTM A 675 MINIMUM YIELD 55 ksi OR ASTM A 36 SPECIAL QUALITY MODIFIED TO 55 ksi. THE THREADED END OF THE ANCHOR SHALL HAVE 12" INCHES OF 4 1/2 NC THREADS AND SHALL BE GALVANIZED ACCORDING WITH ASTM A 153 ALL ITS LENGTH PLUS 3 INCHES.

ALL WELDING SHALL CONFORM TO AWS 01.1 ON SHAFT TO BASE PLATE CONNECTIONS. WELD SHALL GENERATE THE FULL STRENGTH OF THE SHAFT. CONTACTING JOINT SURFACES SHALL BE THOROUGHLY CLEANED BEFORE FABRICATION AND THEN COMPLETELY SEALED BY WELDING.
ONLY LONGITUDINAL CONTINUOUS **WELDING IS PERMITTED ON POLE SHAFT.**

POLE BAND POSITION

POLE LENGTH	A	B	C
30'	6"	8'	12'
36'	1'	13'	17'

POLE BAND SIZE NUMBER	O.D. OF POLE ROUND OR MULTISIDED	
	MIN.	MAX.
12	11.6"	13.0"
13	12.9"	14.1"
14	14.0"	15.1"
15	15.0"	16.0"

STATE OF INDIANA

TRAFFIC SIGNAL DETAILS

30' & 36' STEEL STRAIN POLE

ENGINEER OF SIGNAL DESIGN

DATE

ALFREDO G. HANZA REGISTERED No. 20657 STATE OF INDIANA PROFESSIONAL ENGINEER

P-20622

TELEPHONE POST N27550

FEDERAL ROAD / REGION NO.	STATE	PROJECT NO.	FISCAL YEAR	SHEET NO.	TOTAL SHEETS
5	IND.	ST-V5 10(D)	1990	21	78

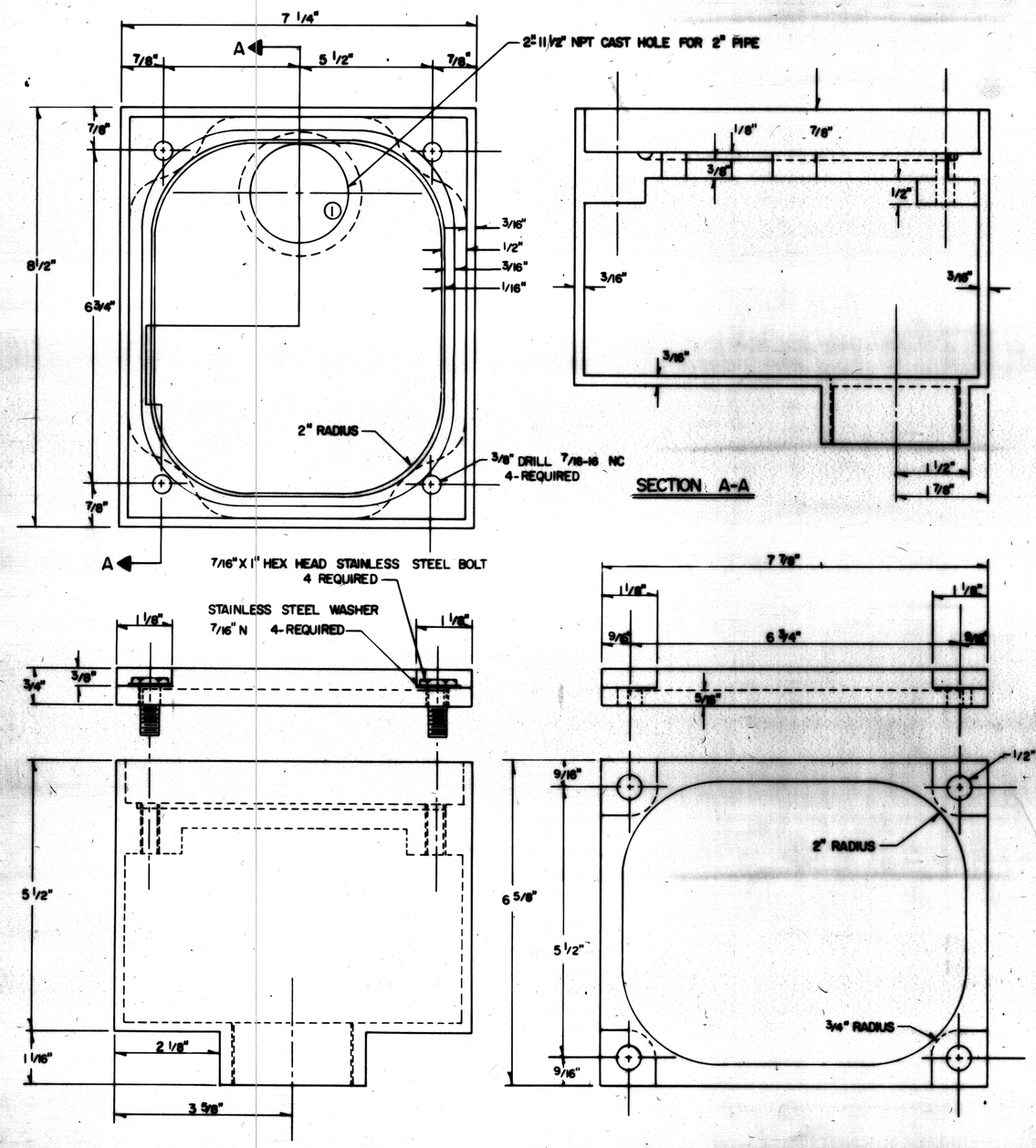

DETAIL OF DETECTOR HOUSING

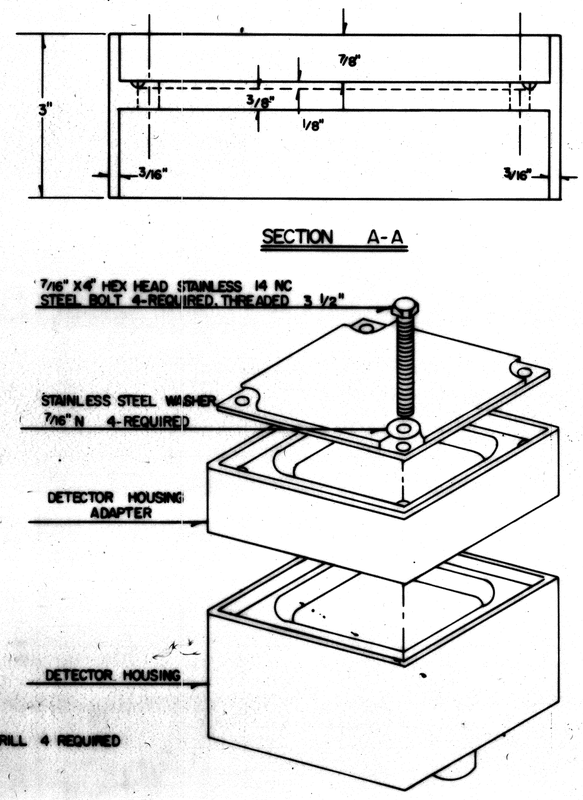

DETAILS OF DETECTOR HOUSING ADAPTER

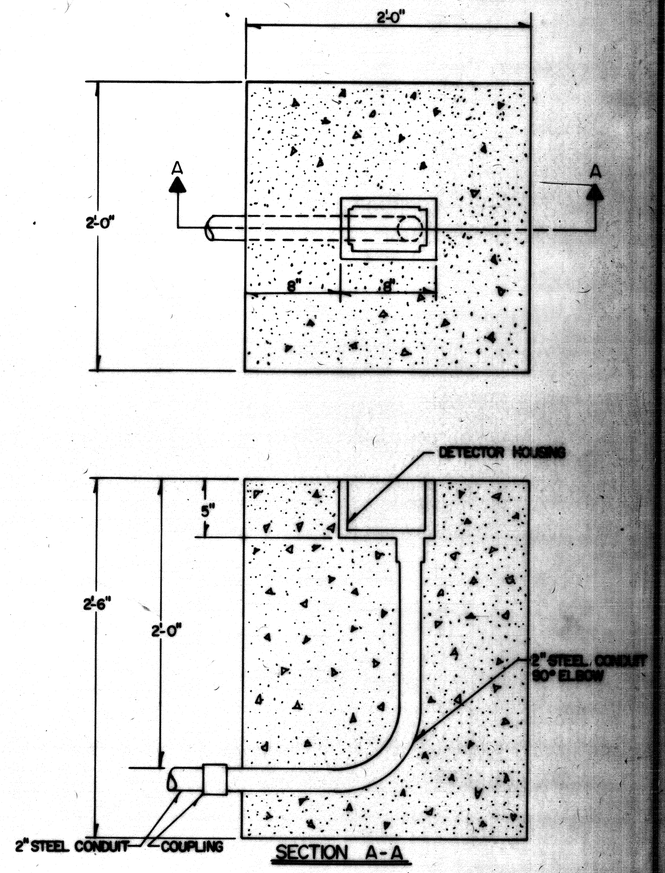

INSTALLATION DETAILS
DETECTOR HOUSING

NOTES

1. FIRST THREAD OF HOLE IS TO BE SAME AS THE FIRST THREAD DIAMETER OF PIPE
2. ENTIRE CASTING TO BE MADE FROM ALUMINUM ALLOY ANSI 319.1 OR 319.2
3. CONCRETE FOR DETECTOR HOUSING'S SHALL BE HIGH EARLY STRENGTH IN ACCORDANCE WITH THE STANDARD SPECIFICATIONS.

STATE OF INDIANA

TRAFFIC SIGNAL DETAILS

DETECTOR HOUSING

Alfred Glass

ENGINEER OF SIGNAL DESIGN DATE

R-20622

FEDERAL ROAD REGION NO.	STATE	PROJECT NO.	FISCAL YEAR	SHEET NO.	TOTAL SHEETS
5	IND.	ST-V5 10(D)	1990	22	78.

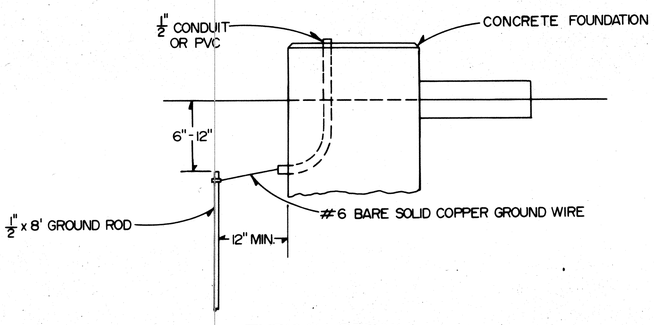

TYPICAL DETAIL
GROUND ROD IN EARTH

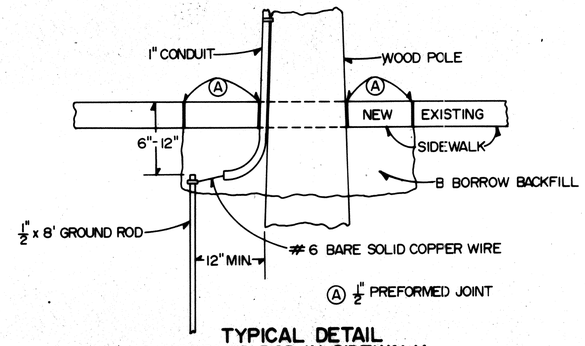

TYPICAL DETAIL
GROUND ROD IN SIDEWALK

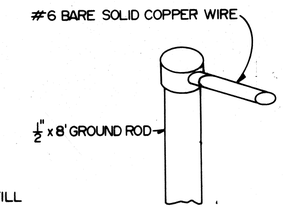

TOP
CONNECTION

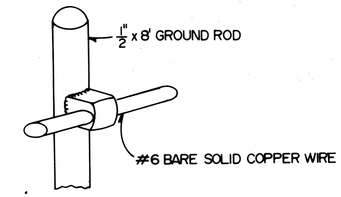

SIDE
CONNECTION

THERMO WELD

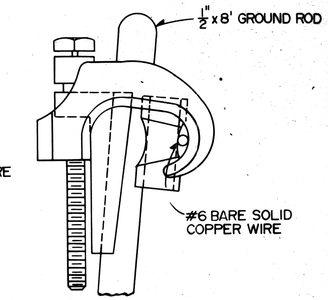

GROUNDING GRID

GROUND ROD CONNECTIONS

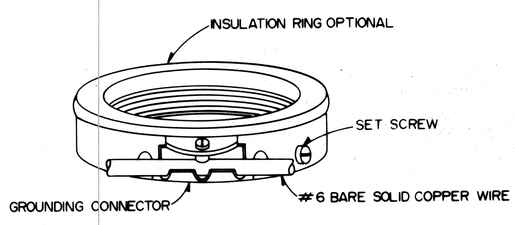

GROUNDING BUSHING
(THREADED)

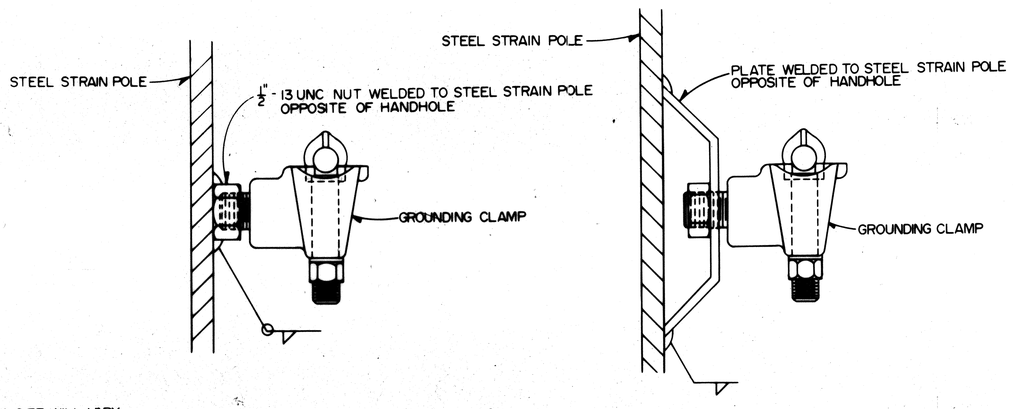

GROUNDING POST DETAIL

NOTES

1. IF ROCK IS ENCOUNTERED, ATTEMPT TO DRIVE GROUND ROD AT 30° FROM VERTICAL. IF REFUSED, ATTEMPT TO DRIVE AT 45° FROM VERTICAL. IF REFUSED, BURY IN A TRENCH AT LEAST 2 1/2' DEEP.
2. SET SCREW IS TO ALIGN CONNECTOR IN RELATION WITH OTHER GROUNDING BUSHINGS REQUIRING A COMMON GROUNDING CONDUCTOR AND TO ASSURE POSITIVE GROUND CONTINUITY BETWEEN BUSHING & CONDUIT.
3. OXIDATION INHIBITOR SHALL BE LIBERALLY APPLIED TO ALL SURFACES THAT MATE WITH A DISSIMILAR MATERIAL.

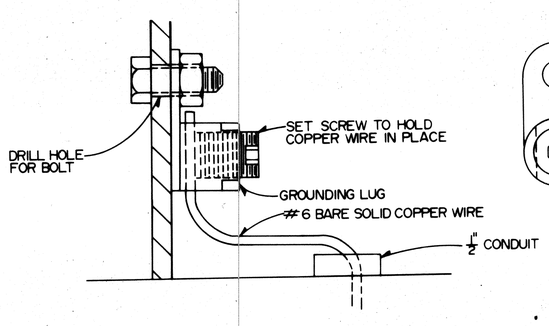

GROUNDING LUG DETAIL
(FIELD CONNECTION)

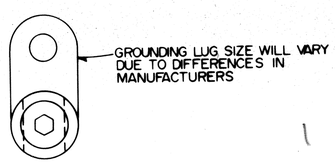

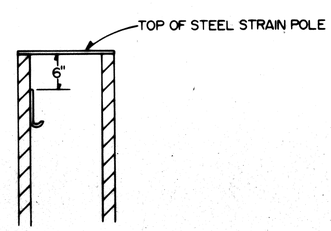

HOOK PLACEMENT

STATE OF INDIANA

TRAFFIC SIGNAL DETAILS

GROUNDING

ENGINEER OF SIGNAL DESIGN DATE

ALFREDO G. SANCHEZ REGISTERED No. 20657 STATE OF INDIANA PROFESSIONAL ENGINEER

R-20622

FEDERAL ROAD REGION NO	STATE	PROJECT NO	FISCAL YEAR	SHEET NO	TOTAL SHEETS
5	IND.	ST-V5 10(D)	1990	23	78

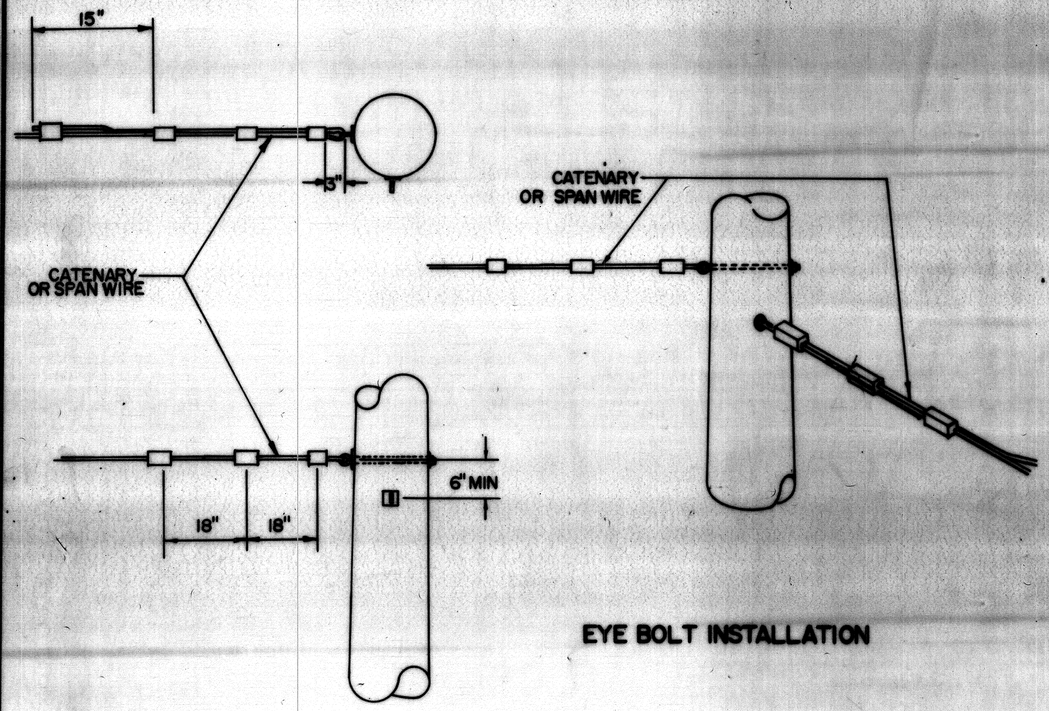

EYE BOLT INSTALLATION

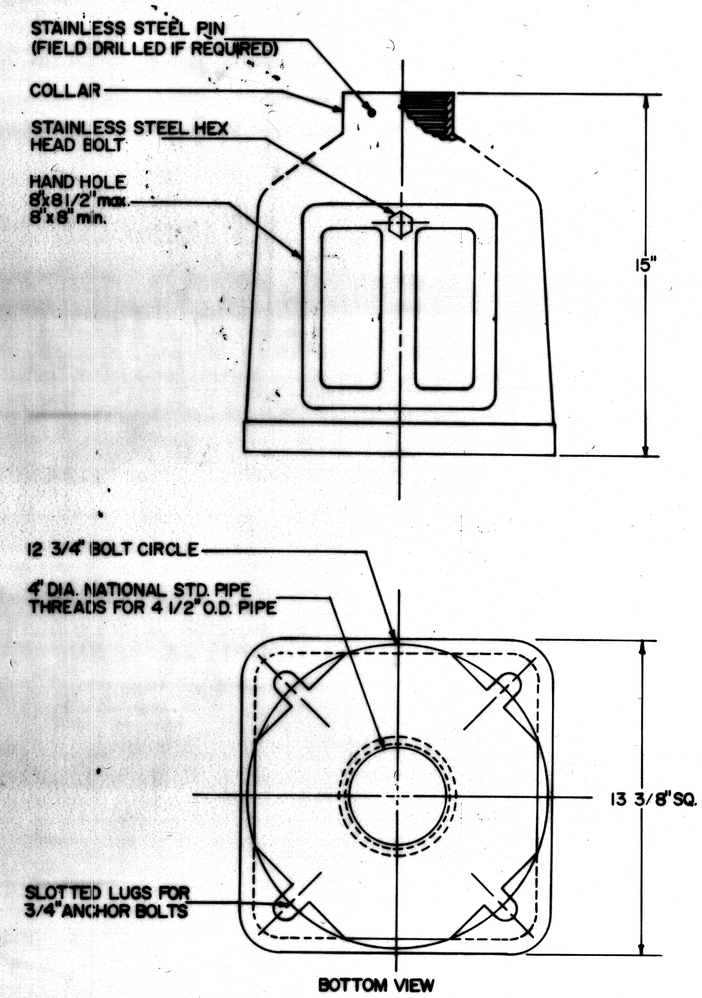

NOTE:
1. INSTALLATION IS THE SAME FOR STEEL STRAIN POLES EXCEPT POLE BANDS WILL BE USED.
2. THE DISTANCES SHOWN ARE LENGTHS WITH THE EXCEPTION OF THE DISTANCE BETWEEN THE "EYE" BOLT AND THE FIRST CLAMP. IN THIS INSTANCE THE 3" LENGTH IS A MAXIMUM.

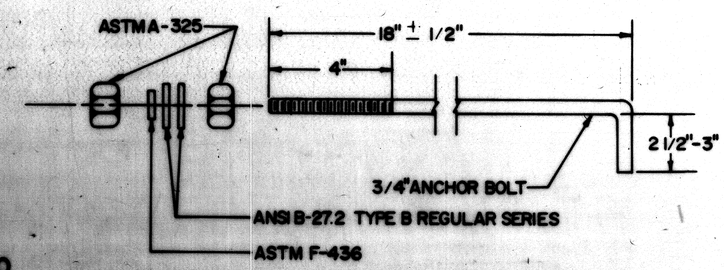

THIS DRAWING IS NOT TO SCALE

STATE OF INDIANA

TRAFFIC SIGNAL DETAILS

PEDESTAL BASE & EYE BOLT

ENGINEER OF SIGNAL DESIGN — DATE

ALFREDO G. FANZA REGISTERED No. 20657 STATE OF INDIANA PROFESSIONAL ENGINEER

FEDERAL ROAD REGION NO.	STATE	PROJECT NO.	FISCAL YEAR	SHEET NO.	TOTAL SHEETS
5	IND.	ST-V5 10(D)	1990	24	78

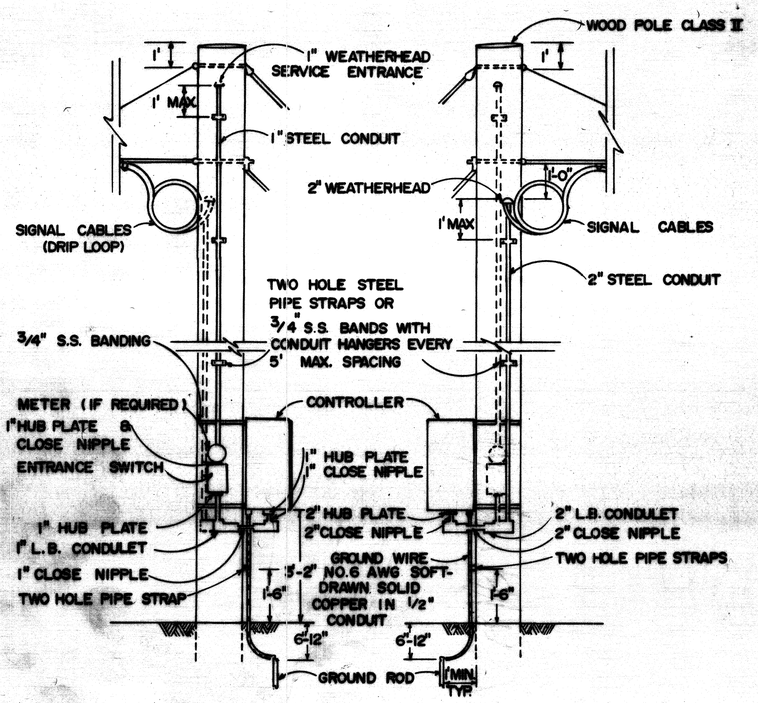

SERVICE & CONTROLLER MOUNTED ON WOOD POLE

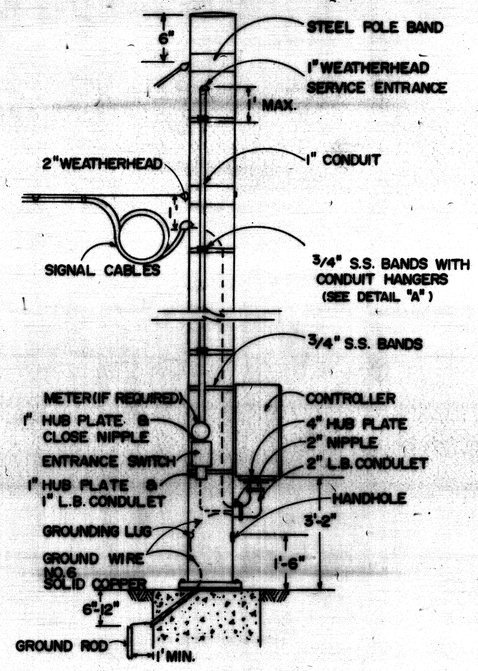

SERVICE & CONTROLLER MOUNTED ON STEEL POLE

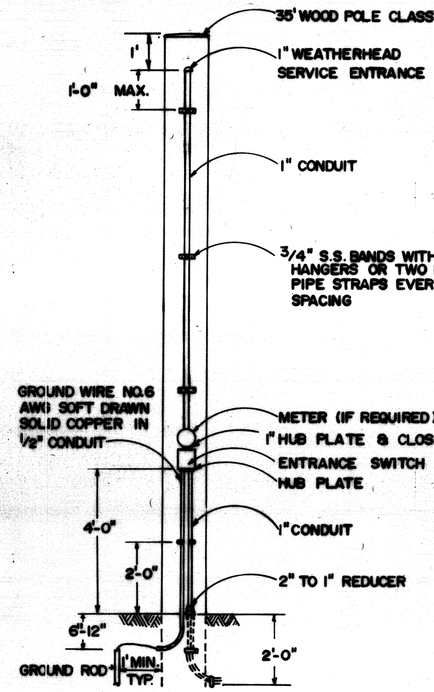

SERVICE ON WOOD POLE

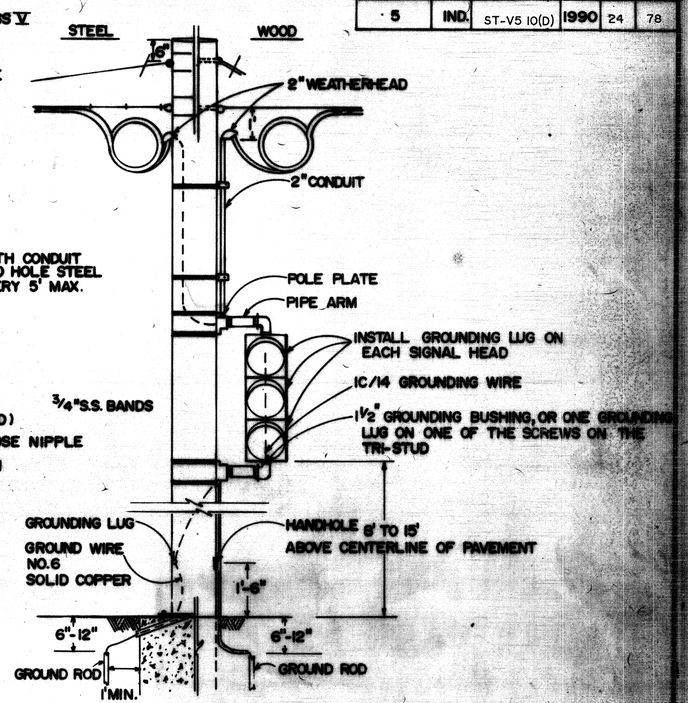

SIGNAL INDICATION MOUNTED ON STEEL OR WOOD POLES

NOTES

1. ON METAL SIGNAL HEADS GROUNDING WIRE SHALL CONNECT EACH SIGNAL HEAD AND THE BOTTOM GROUNDING BUSHING OF THE ASSEMBLY TO THE GROUNDING LUG
2. ON PLASTIC SIGNAL HEADS GROUNDING WIRE SHALL CONNECT THE GROUNDING BUSHES OF TOP AND BOTTOM OF THE ASSEMBLY TO THE GROUNDING LUG
3. ON EACH PEDESTAL BASE SHALL BE INSTALLED A GROUNDING LUG

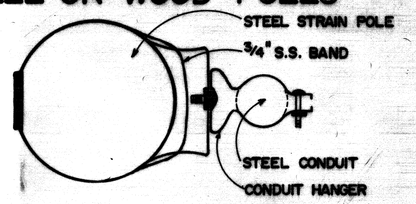

DETAIL "A"

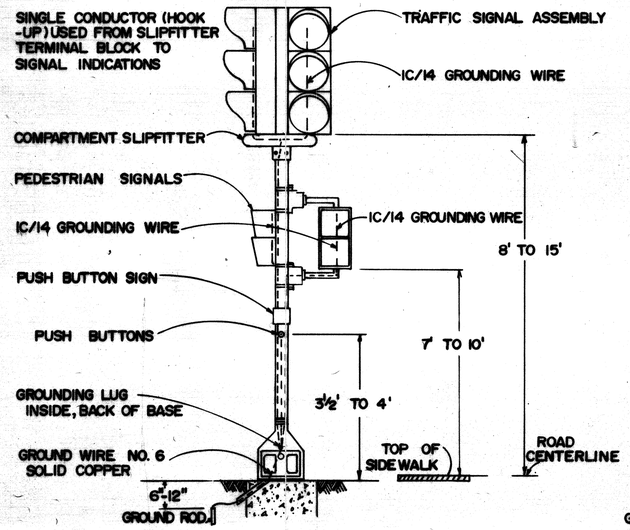

PEDESTAL MOUNTED SIGNAL INDICATION

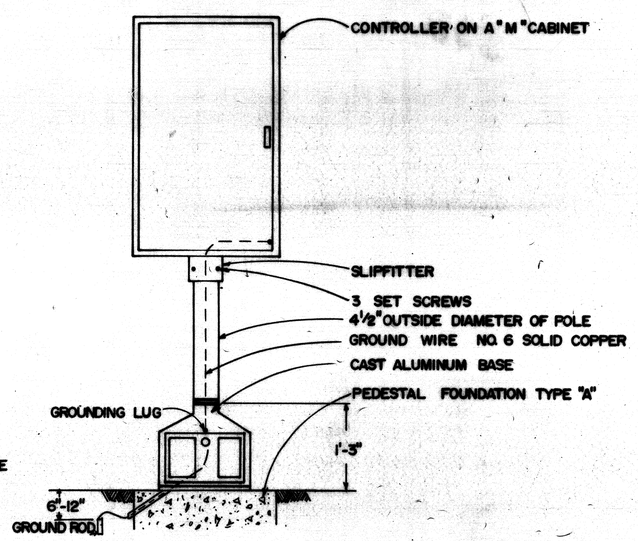

CONTROLLER ON PEDESTAL

STATE OF INDIANA

TRAFFIC SIGNAL DETAILS

SERVICES & CONTROLLERS

ENGINEER OF SIGNAL DESIGN — DATE

R-20622

FEDERAL ROAD REGION NO.	STATE	PROJECT NO.	FISCAL YEAR	SHEET NO.	TOTAL SHEETS
5	IND.	ST-V5 10(D)	1990	25	78

SPAN & CATENARY DETAILS

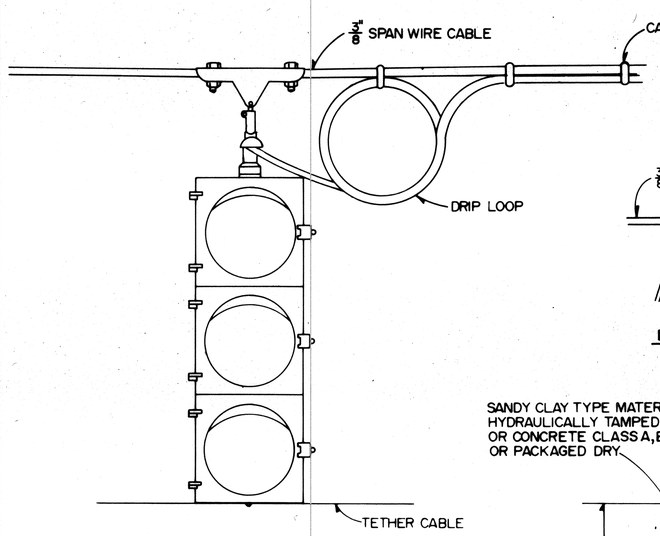

INSTALLED SPAN WIRE SIGNAL

DETAIL "A"

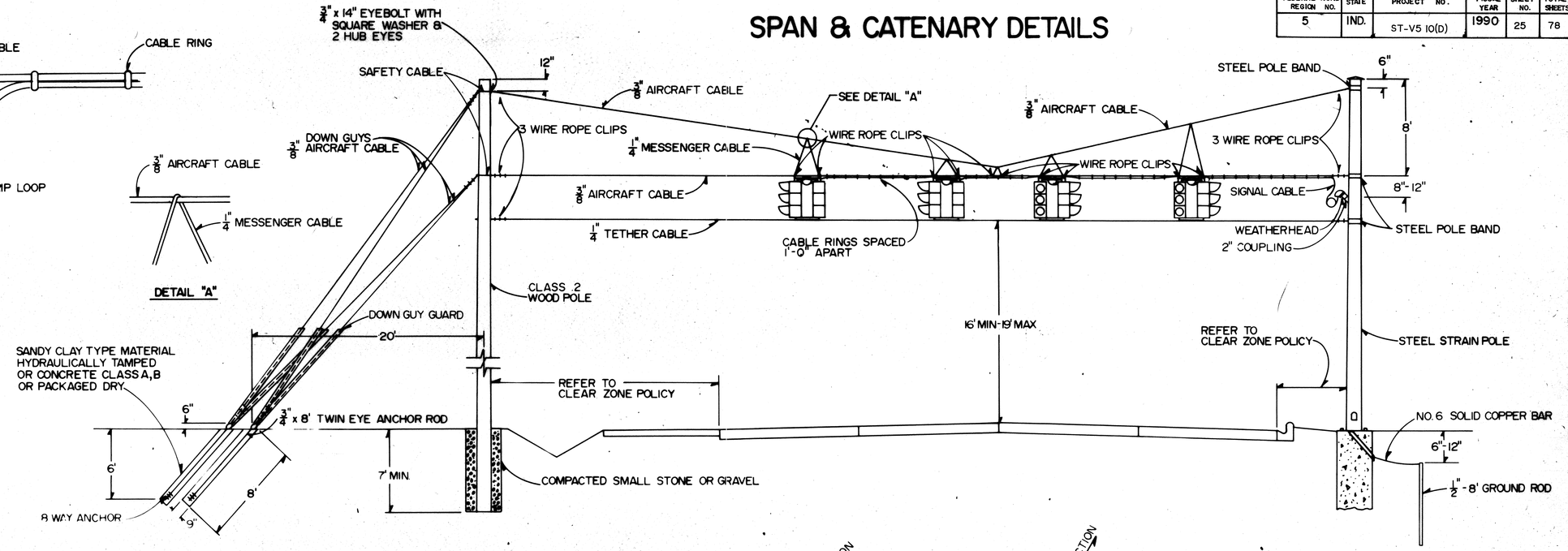

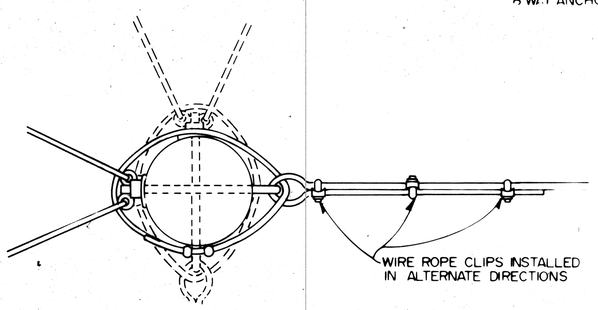

STEEL STRAIN POLE FOUNDATION & REINFORCEMENT DETAIL

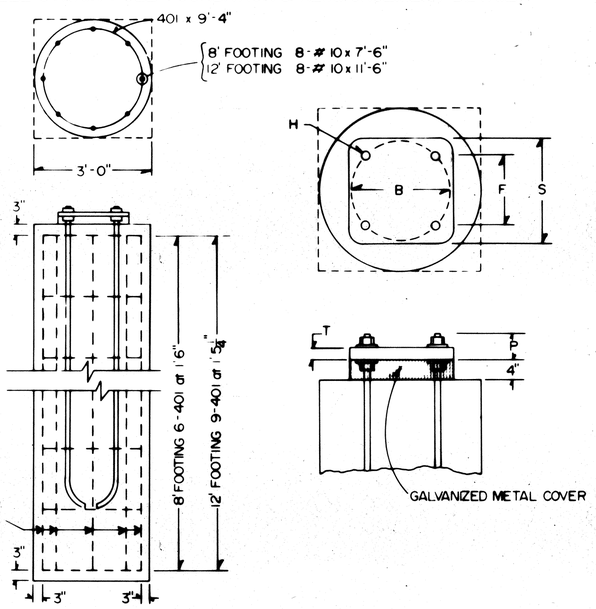

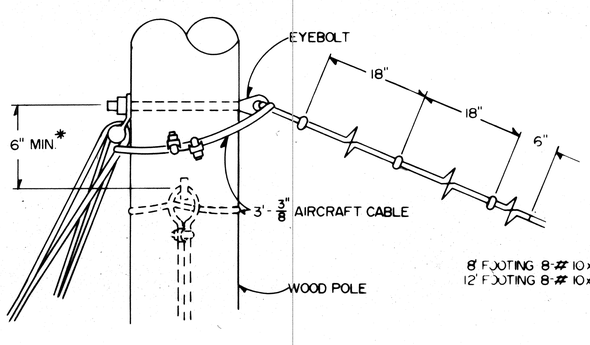

SAFETY CABLE DETAIL

* IN CASE MORE THAN ONE CATENARY IS ATTACHED TO POLE

ANCHOR BOLT DATA

ANCHOR BOLTS	B	F	H	P	S	T	POLE SIZE	FOUNDATION
1 3/4" x 90"	16"	11 5/16"	2 1/8"	3 3/4"	17"	2"	12" x 24'	3' x 8'
2 1/4" x 96"	22"	15 1/2"	2 5/8"	4 3/4"	23"	2 3/4"	15" x 30' x 36'	3' x 12'

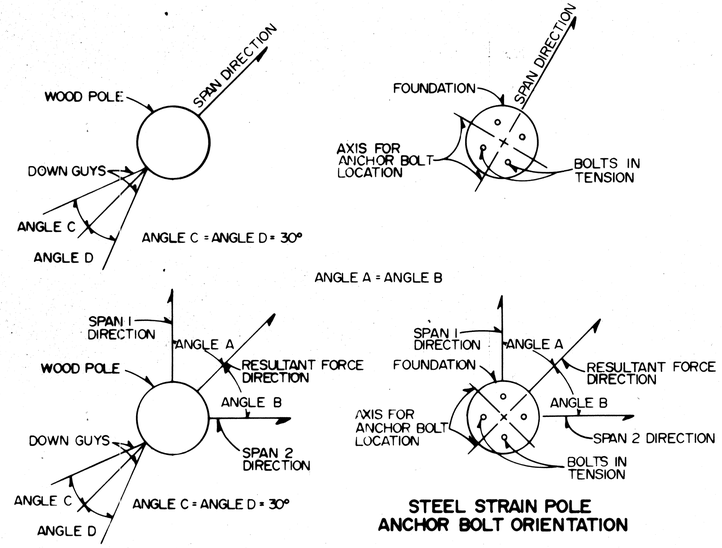

WOOD POLE GUY ALIGNMENT

STEEL STRAIN POLE ANCHOR BOLT ORIENTATION

NOTES

1. FOUNDATIONS SHALL BE FLUSH WITH GROUND.
2. FOUNDATIONS CAN BE EITHER ROUND OR SQUARE. ALSO FOUNDATION CAN BE ROUND WITH A SQUARE TOP.
3. ANY STEEL STRAIN POLE LONGER THAN 24' SHALL HAVE A MAXIMUM LOAD OF 8000 LBS.
4. 3 WIRE ROPE CLIPS SHALL BE INSTALLED AT EACH END OF THE AIRCRAFT CABLES FOR THE DOWN GUYS.

STATE OF INDIANA

TRAFFIC SIGNAL DETAILS

SPAN & CATENARY

Alfredo Ofana

ENGINEER OF SIGNAL DESIGN — DATE

ALFREDO B. KANAY REGISTERED No. 20657 STATE OF INDIANA PROFESSIONAL ENGINEER

R-20622

FEDERAL ROAD REGION NO.	STATE	PROJECT NO.	FISCAL YEAR	SHEET NO.	TOTAL SHEETS
5	IND.	ST-V5 10(D)	1990	26	78

CONTROLLER CABINET FOUNDATION DETAILS

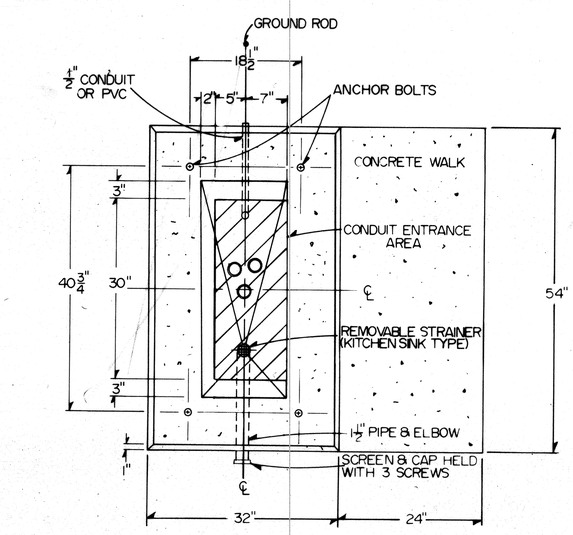

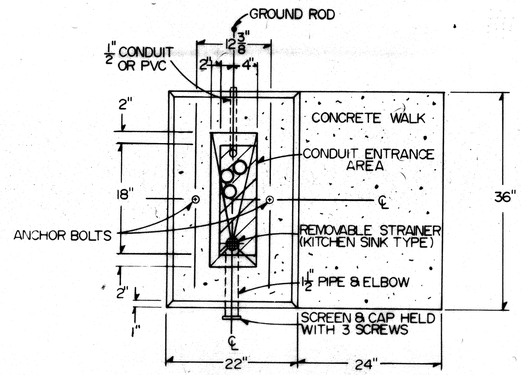

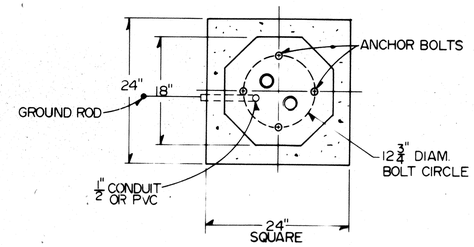

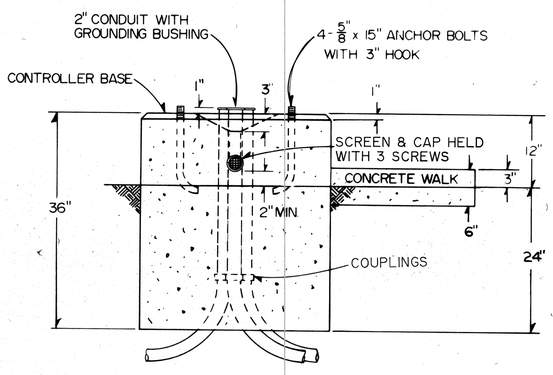

CONTROLLER CABINET FOUNDATION TYPE "P-1"

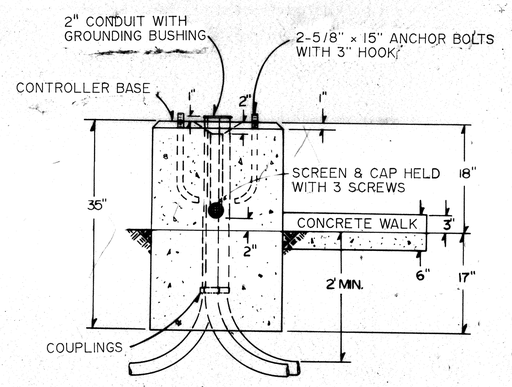

CONTROLLER CABINET FOUNDATION TYPE "M"

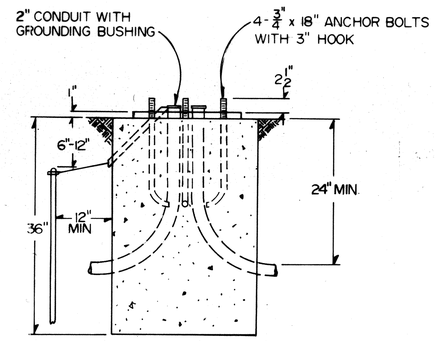

PEDESTAL FOUNDATION TYPE "A"

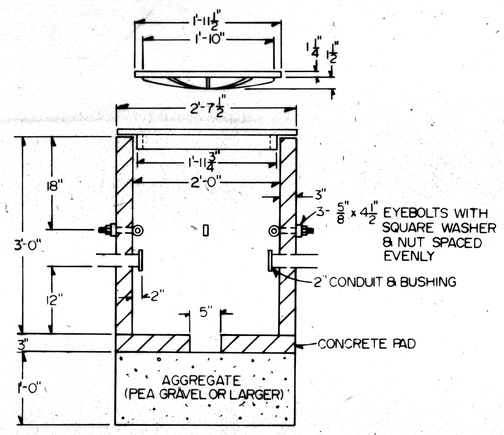

HANDHOLE

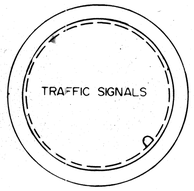

TOP

NOTES

1. CONCRETE FOR ALL FOUNDATIONS SHALL BE EITHER CLASS A, B OR C IN ACCORDANCE WITH 702.02 WITH A CLASS FINISH. CONCRETE WALK SHALL BE CONSTRUCTED OF THE SAME CLASS OF CONCRETE AS THE FOUNDATION.
2. THREE 2" CONDUIT INLETS TO BE INSTALLED AS A MINIMUM PER FOUNDATION. MORE INLETS SHALL BE INSTALLED IF REQUIRED ON PLANS OR SPECIAL PROVISIONS. INLETS NOT USED SHALL BE CAPPED BELOW GRADE.
3. FOUNDATION TYPES "P-1" & "M" SHALL CONFORM TO ANY MINOR DIFFERENCES OF INDIVIDUAL DESIGNS FOR ALL ACCEPTED CABINETS.
4. CONTROLLERS' EXTERIOR BASE IN CONTACT WITH THE FOUNDATION SHALL BE SEALED ALL AROUND WITH A SILICONE SEALER.
5. ANCHOR BOLTS SHOULD EXTEND 2 1/2" ABOVE THE PLANE OF THE MOUNTING FOUNDATIONS. USE PAPER MAILING TUBE OR TAPE TO PROTECT THE THREADS FROM CONCRETE.
6. THE GROUND ROD SHALL BE 8' LONG IN ACCORDANCE WITH 912.15(g). THE GROUND WIRE SHALL BE BROUGHT THROUGH THE FOUNDATION VIA A 1/2" CONDUIT ELBOW OR STRAIGHT SECTION (INSTALLED AT AN ANGLE). THE CONDUIT MAY BE EITHER GALVANIZED STEEL OR RIGID PVC (HEAVY WALL).
7. CONCRETE WALK IS REQUIRED WHEN THERE IS NOT AN EXISTING SIDEWALK THAT CAN BE USED IN FRONT OF THE CONTROLLER.

STATE OF INDIANA

TRAFFIC SIGNAL DETAILS

CONTROLLER FOUNDATION

Alfredo Ganza

ENGINEER OF SIGNAL DESIGN

DATE

ALFREDO GANZA REGISTERED No. 20657 STATE OF INDIANA PROFESSIONAL ENGINEER

R-20622

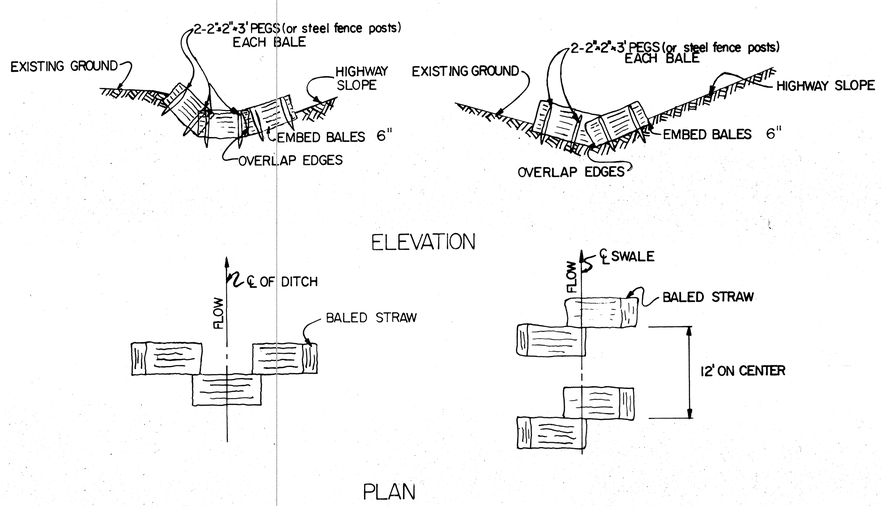

METHOD A

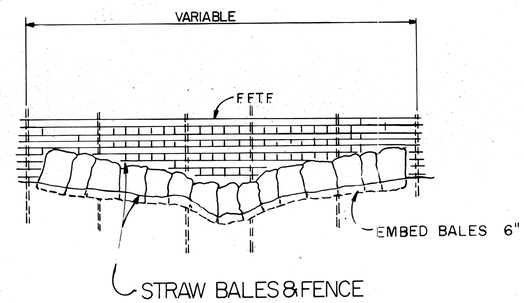

METHOD B

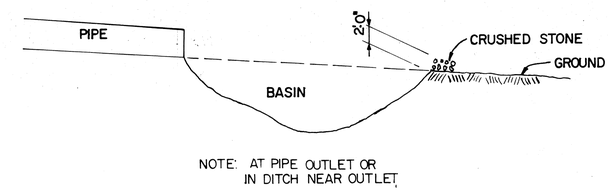

METHOD D

TABLE OF QUANTITIES						
LOCATIONS	SIZE	METHOD				
		A	B	C	D	E
STATION TO STATION	FEET	BALES	LFT.	LFT.	EACH	BALES
242+75 "C" Rt.		3				
244+15 "C" Lt.						3
245+20 "C" Rt.		3				
245+95 "C" Lt.		3				
246+95 "C" Lt.		3				
247+05 "C" Rt.		3				
248+75 "C" Lt.						3
249+50 "C" Lt.						3
249+70 "C" Rt.		3				
250+40 "C" Rt.		3				
254+00 "C" Lt.						3
255+00 "C" Lt.						3
Subtotals		21				15
Total Straw Bales				36 Each		

PAY ITEMS

METHOD A	"STRAW BALES	EACH
METHOD B	"EROSION CONTROL METHOD B"	LIN.FT.
METHOD C	"EROSION CONTROL METHOD C"	LIN.FT.
METHOD D	"EROSION CONTROL METHOD D"	EACH
METHOD E	"STRAW BALES IN PLACE"	EACH

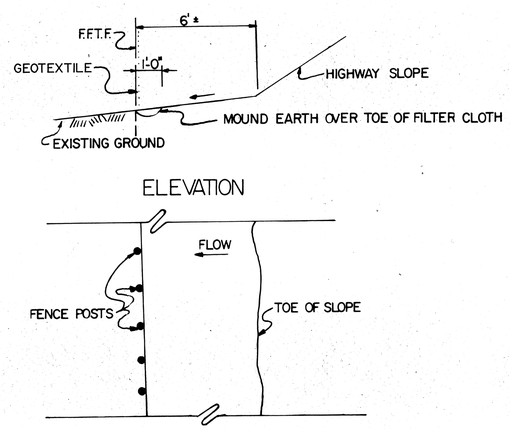

METHOD C

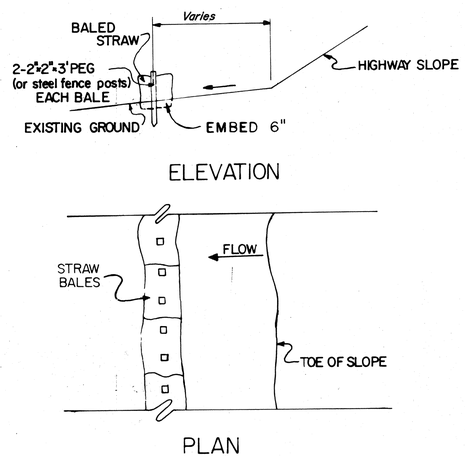

METHOD E

EROSION CONTROL

INDIANA DEPARTMENT OF TRANSPORTATION

SCALE:-

SHEET:- 27 OF 78

PROJECT:- ST-V510(D)

CONTRACT NO. R-20622

LAWRENCE C. SUHRE REGISTERED No. 18417 STATE OF INDIANA PROFESSIONAL ENGINEER

DESIGNED _____ C'K'D _____
DRAWN JTR 5-4-79 C'K'D _____
TRACED _____ C'K'D _____

Rev. 6-6-79 Method D and E
Rev. 4-7-80 Method A, B and E

UNDERDRAIN TABLE

LEFT OF CENTERLINE

REMARKS	OUTLET: CONNECT TO STRUCTURE NO.	OUTLET: OUTLET THRU SHOULDER	OUTLET: DELINIATOR POST EACH	OUTLET: SODDING SYS.	OUTLET: 6" NON-PERF. F.B.C.C.S. PIPE (0.052") FEET	TEES EACH: 6" TO 6"	TEES EACH: 6" TO 6"	WYE EACH	BENDS EACH: 45°	BENDS EACH: 90°	AT STATION	6" GROUP "K" PIPE FEET	STATION
													"C"
	14				18	1					246+00	330	242+70
													246+00
	15				28			1			246+87	87	246+87
												213	249+00
													253+82
	27				10				1		253+82	588	259+70
SUBTOTALS					56	1		1	1			1,218	

RIGHT OF CENTERLINE

STATION	6" GROUP "K" PIPE FEET	OUTLET: AT STATION	BENDS EACH: 90°	BENDS EACH: 45°	WYE EACH	TEES EACH: 6" TO 6"	TEES EACH: 6" TO 6"	TEES EACH: 6" TO 6"	6" NON-PERF. F.B.C.C.S. PIPE (0.052") FEET	SODDING SYS.	POST DELINIATOR EACH	THRU SHOULDER OUTLET	STRUCTURE NO. CONNECT TO	REMARKS
"C"														
242+50														
	440	246+90			1				10					
246+90														
	13	247+03			1				10					
247+03														
	327													
250+30														
251+82														
	200	251+82	1						15				23	
254+00														
	570													
259+70														
	1,550		1		2				35					

TOTALS

6" NON-PERF. F.B.C.C.S. PIPE (0.052")

WYES: 3 EACH (5 LFT./EACH) = 15 LFT.
TEES: 1 EACH (5 LFT./EACH) = 5 LFT.
BENDS: 2 EACH (2 LFT./EACH) = 4 LFT.
24 LFT.

56 LFT. + 35 LFT. + 24 LFT. = 115 LFT. TOTAL

6" GROUP "K" PIPE
1,218 LFT. + 1,550 LFT. = 2,768 LFT. TOTAL

AGGREGATE FOR UNDERDRAINS SIZE 8
2,768 LFT x 0.09 CYS./LFT. = 249 CYS. TOTAL

R/W MARKER TABLE

STATION	LEFT (EACH)	RIGHT (EACH)
LINE "C"		
244+07.1		2
246+07		2
250+30		1
251+82		1
252+50	1	
253+25		1
253+68.43 (RANGE)	1	
253+92.1		2
255+38.43 (RANGE)	2	
256+18.42 (RANGE)	2	
258+18.02 (RANGE)	2	
LINE "S-I-C"		
48+15.15 (RANGE)		2
48+50	1	
50+90		1
SUBTOTALS	9	12
TOTAL	21 EACH	

MONUMENT TABLE

LOCATION	TYPE "A"	TYPE "B"
LINE "C"		
P.O.T. 246+45.80	1	
P.O.T. 251+73.25		1
P.I. 252+32.50		1
P.O.T. 259+36.60	1	
TOTAL	2	2

PAVED SIDE DITCH AND SODDING SUMMARY TABLE

FROM STATION	TO STATION	LOCATION: LEFT	LOCATION: MEDIAN	LOCATION: RIGHT	PAVED SIDE DITCH: ACTUAL LENGTH LFT.	PAVED SIDE DITCH: CUT OFF WALLS (8' EQUIVALENT LENGTH EA.) EACH	PAVED SIDE DITCH: LUICS (8' EQUIVALENT LENGTH EA.) EACH	TOTAL EQUIVALENT PAY LENGTHS TYPE LFT.	TYPE LFT.	TYPE LFT.	TYPE LFT.	TYPE LFT.	TYPE LFT.	TYPE LFT.	SODDING (NURSERY): FOR PAVED SIDE DITCH SYS.	FOR SHOULDER SYS.	FROM BACK OF CURB TO R/W LINE SYS.	FOR SHOULDER SYS.	FOR LAWN SYS.	SEE SHEET NO.
LINE "C"																				
241+40	242+89			X													303			
242+50	244+23	X															379			
243+00	243+69			X													137			
243+79	243+32			X													437			
244+36	245+00	X															131			
245+21	246+40	X															195			
245+48	246+48			X													187			
246+60	248+08	X															176			
246+78	247+65			X													129			
247+89	249+85			X													316			
248+19	248+82	X															73			
248+95	249+80	X															107			
250+11	250+62			X													108			
250+16	250+62	X															59			
250+98	251+95	X															112			
251+40	252+68			X													158			
252+33	253+30	X															183			
253+04	253+44			X													51			
253+64	254+34	X															123			
253+80	254+22			X													72			
254+50	255+15	X															80			
254+54	255+32			X													79			
255+44	256+30			X													188			
255+45	256+27	X															213			
256+42	257+09			X													112			
256+43	257+30	X															135			
257+42	258+24	X															149			
257+20	257+32			X													16			
257+44	258+73			X													277			
258+35	259+35	X															78			
258+93	259+24			X													47			
259+50	259+70			X													67			
259+52	259+70	X															42			
LINE "S-I-C"																				
46+87	47+10			X													19			
47+31	47+78			X													40			
47+34	48+50	X															230			
48+00	48+34			X													19			
48+66	49+00			X													53			
50+75	50+81	X															6			
50+75	51+50			X													76			
51+12	51+50	X															67			
TOTAL																	5,429			
ADDITIONAL WATER												5,429 SYD. x 4 GAL./SYD. ÷ 1,000 = 22MG								

S.R. 120 & C.R. 17
MISCELLANEOUS TABLES

R-20622

REV. 3-16-93: STRS. NO. 24, 26, 27 & 31
REQUESTED BY UTILITIES TO AVOID GAS MAIN

STRUCTURE DATA

* IF CONTRACTOR ELECTS TO USE METAL PIPE THICKNESS AS SHOWN BELOW ARE TO BE USED.

* IF CONTRACTOR ELECTS TO USE METAL PIPE THICKNESS AS SHOWN BELOW ARE TO BE USED.

FEDERAL ROAD REGION NO.	STATE	PROJECT NO.	FISCAL YEAR	SHEET NO.	TOTAL SHEETS
5	IND.	ST-V510(D)	1990	29	78

STRUCTURE NUMBER	LOCATION	LEFT	RIGHT	CROSS	SIZE (INCHES)	GROUP	DESCRIPTION: SEE ST'D. SHEET "MP" FOR ACCEPTABLE TYPE OF PIPE WITHIN EACH GROUP.	LENGTH	SKEW	COVER	FLOW LINE UP STREAM ELEV.	FLOW LINE DOWN STREAM ELEV.	CONCRETE CLASS "A" CU.YDS.	"B" BORROW FOR STR. BACKFILL CU.YDS.	BACKFILL METHOD	GAGES OR THICKNESS * STEEL	GAGES OR THICKNESS * ALUM.	VELOCITY	RIPRAP SYS.	PIPE END SECTION EA.	REINF. STEEL LBS.	REMARKS
							PROPOSED															
	LINE "C"																					
10	242+93		X		15	D		22		1	756.28	756.11		3	B	.064	.075			2		
11	243+74		X		15	D		26		1	755.66	755.46		3	B	.064	.075			2		
12	245+40		X		15	D	Inlet Type P-12A	26		1.5	754.28	754.20		9	B	.064	.105					Connect to Str. No.13
13	245+55		X				Inlet Type F-7				756.13	(1)		32	A							Connect to Str.No.12 & 17
					15	P		140			754.20	753.78										
14	246+00	X					15" Pipe C.B.				755.90	(1)		22	A							
					12	P		64			754.22	753.90										Connect to Str. No.15
15	246+68	X					Inlet Type M-10				756.40	(1)		31	A							
					15	L		84			753.90	753.56										Connect to Str. No.14,16 & 17
16	246+90	X					15" Pipe C.B.				756.27	(1)		7	B							
					12	P		24			754.25	753.90										Connect to Str. No.15
17	246+97			X			C.B. Type A-8				757.02	(1)		54	B							
					18	L		102			753.31	752.90										Connect to Str. No.13,15,18 & 19
18	247+00		X				15" Pipe C.B.				756.80	(1)		4	A							
					12	L		6			754.00	753.60										Connect to Str. No.17
19	248+00		X				Inlet Type M-10				757.51	(1)		124	A							
					24	L		174			752.90	752.41										Connect to Str. No.17 & 20
	LINE "PR-1"																					
20	249+75		X				Inlet Type F-7				756.28	(1)		34	A							
					24	L		50			752.41	752.27										Connect to Str. No.19 & 21
21	250+37		X				C.B. Type W-4				756.00	(1)		100	A							
					24	L		136			752.02	751.64										Connect to Str. No.20,22 & 23
22	250+70		X				Inlet Type B-15				756.25	(1)		18	A							
					12	L		36			753.00	752.82										Connect to Str. No.21
23	251+76		X				M.H. Type C-4				756.90	(1)		14	A							
					24	L		8			751.64	751.56										Connect to Str. No.21,25,55, & 52
24	251+10	X					Inlet Type M-10, Modified				758.44	(1)		48	A							Connect to Str. No.26 & 31
					12	L		120			~~754.67~~	~~754.07~~										Inlet 1.0' deeper than st'd.
											752.75	752.15										
25	49+25"S-1-C"		X				Inlet Type B-15				756.08	(1)		14	A							Connect to Str. No.23
					12	L		30			753.40	753.30										
	LINE "PR-1"																					
26	252+30	X					C.B. Type A-8				758.20	(1)		24	A							Connect to Str. No.24 & 53
					15 ~~12~~	L		32			~~754.07~~	~~753.91~~										
											752.15	751.90										
27	253+70			X			Inlet Type M-10				759.24	(1)		20	A							Connect to Str. No.~~28 & 29~~ 26 & 29.
					12	L		~~67~~			755.74	~~755.44~~										
								146				754.07										
28	253+90		X				C.B. Type A-8				757.76	(1)		36	A							Connect to Str. No.55 27 & 30
					15	L		73			754.35	753.99										
29	254+53	X					Inlet Type A-8				759.49	(1)		30	A							Connect to Str. No.27
					12	L		84			756.16	755.74										
30	254+55		X				Inlet Type A-8				757.99	(1)		27	A							Connect to Str. No.28
					12	L		62			754.66	754.35										
31	250+50"PR-1"	X					Inlet Type A-8				758.30	(1)		23								
					12	L		60			754.97	~~754.67~~			A							Connect to Str. No.24
												752.75										
	TOTAL																					

STRUCTURE NUMBER	LOCATION	LEFT	RIGHT	CROSS	SIZE (INCHES)	GROUP	DESCRIPTION: SEE ST'D. SHEET "MP" FOR ACCEPTABLE TYPE OF PIPE WITHIN EACH GROUP.	LENGTH	SKEW	COVER	FLOW LINE UP STREAM ELEV.	FLOW LINE DOWN STREAM ELEV.	CONCRETE CLASS "A" CU.YDS.	"B" BORROW FOR STR. BACKFILL CU.YDS.	BACKFILL METHOD	GAGES OR THICKNESS * STEEL	GAGES OR THICKNESS * ALUM.	VELOCITY	RIPRAP SYS.	PIPE END SECTION EA.	REINF. STEEL LBS.	REMARKS
							EXISTING															
	LINE "C"																					
50	248+84	X					Existing Inlet															Casting Adjusted To Grade
51	251+17		X				Existing M.H															Casting Furnished And Adjusted To Grade
																						Type 4
52	251+66		X				Existing M.H															Casting Furnished And Adjusted To Grade
	LINE "S-1-C"																					Type 4
53	50+79		X				Existing M.H															Casting Adjusted To Grade
54	52+15		X				Existing M.H															No Change Req'd.
55	253+08 "C"		X		15	L	M.H. TYPE "C-4"	126			757.50	(1)		62	A							Connect to Str. No. 23 & 28
											753.89	753.26										
							TOTAL							740								

LEGEND FOR ABBREVIATION

F.B.C.C.S./P.I.--FULLY BITUMINOUS COATED CORRUGATED STEEL WITH PAVED INVERT.
F.B.C.C.A.A./P.I.-FULLY BITUMINOUS COATED CORRUGATED ALUMINUM ALLOY WITH PAVED INVERT.
F.B.C.C.S.------ FULLY BITUMINOUS COATED CORRUGATED STEEL.
C.S.---------CORRUGATED STEEL.
C.A. A.--------CORRUGATED ALUMINUM
S.P.S.---------STRUCTURAL PLATE STEEL
(1) Rim Elevation

F.B.C.S.A./P.I.--FULLY BITUMINOUS COATED CORRUGATED STEEL ARCH WITH PAVED INVERT.
F.B.C.C.A.A./P.I.-FULLY BITUMINOUS COATED CORRUGATED ALUMINUM ARCH WITH PAVED INVERT.
F.B.C.C.A.------FULLY BITUMINOUS COATED CORRUGATED STEEL ARCH.
F.B.C.C.A.A.----FULLY BITUMINOUS COATED CORRUGATED ALUMINUM ARCH.
C.S.A.-------- CORRUGATED STEEL ARCH.
C.A.A.------- CORRUGATED ALUMINUM ARCH.
S.P.S.A.------ STRUCTURAL PLATE STEEL ARCH.

R-20622

FEDERAL ROAD REGION NO.	STATE	PROJECT NO.	FISCAL YEAR	SHEET NO.	TOTAL SHEETS
5	IND.	ST-V510(D)	1989	30	78

SUMMARY OF QUANTITIES AND APPROACH TABLE

LOCATION (STATION)	DESCRIPTION (APPROACH TYPE OR CLASS)	WIDTH "W" FEET	LENGTH "L" FEET	DISTANCE BEYOND R/W LINE FEET	RADII "R" FEET	GRADE (LESS THAN 10% NOT SHOWN) 1 %	GRADE 2 %	EXCAVATION CYS. CUT	EXCAVATION CYS. FILL	BITUM. MIXT. FOR APPROACHES TONS	BITUMINOUS MATERIAL FOR ROADS HV LBS. PER SYD SURFACE 110 TONS	BINDER 220 TONS	BASE 5 660 TONS	BASE 5C 400 TONS	BASE 5D 400 TONS	BITUMINOUS MIXTURE FOR WEDGE & LEVEL TONS	SYS.	SYS.	BITUMINOUS BASE #53B TONS	CEMENT CONCRETE PAVEMENT FOR DRIVES 6" SYS.	BITUMINOUS MATERIAL FOR: SEAL COAT TONS	PRIME COAT TONS	TACK COAT TONS	TYPE "O" COMPACTED AGGREGATE FOR BASE NO. 53 3" TONS	SYS.	SYS.	SYS.	TYPE "P" COMPACTED AGGREGATE FOR SURFACE NO. 73 SYS.	SYS.	CALCIUM CHLORIDE TONS	COVER AGGREGATE TONS	CEMENT CONC. PAVEMENT FOR PATCHING SYS.	REINF. CEMENT CONC. PAVEMENT SYS.	BITUMINOUS STABILIZED SUBBASE SYS.	SURFACE MILLING SYS.	STANDARD CONC. CURB & GUTTER LFT	CONCRETE CURB LFT	SURFACE BEYOND R/W LINE TYPE "P" COMP. AGG. BASE	BITUM.	CONCRETE
LINE "C" APPROACHES																																								
242+93 RT.	CLASS II	14'	20		25-15					5.81														5.9															
243+74 RT.	CLASS II	10'	20		25-15					4.34														4.4															
244+30 LT.	CLASS II	15'	~~20~~ 8		25-15					6.18														6.2															
245+10 LT.	CLASS II	20	~~18~~ 8		25-15					7.28														7.4															
245+40 RT.	CLASS II	16	22		25-15					7.13														7.2															
246+45.80	MOD. ST. APPR.	22	30		30-30						5.26																												
246+63 RT.	MOD. CLASS IV	30	31	14	25-10															108.9																			
247+34 RT.	CLASS III	24	20		10-10															62.4																			
248+13 LT.	CLASS I	11	14		10-10															26.2																			
248+88 LT.	CLASS I	12	14		10-10															27.7																			
249+97 LT. "PR-1"	CLASS III	34	14		10-10															68.0																			
250+43 RT. "PR-1"	CLASS III	26	19		10-10															56.2																			
250+79 LT. "PR-1"	CLASS III	35	14		20-10															71.7																			
252+73 RT. "PR-1"	MOD. CLASS III	42	9		1.5-6															42.9																			
253+47 LT. "PR-1"	CLASS III	30	16		10-10															62.6																			
253+50 RT. "PR-1"	MOD. CLASS III	36	10		3.5-5															53.6																			
254+24 LT. "PR-1"	CLASS I	14	16		10-10															34.2																			
254+29 RT. "PR-1"	CLASS III	30	15		9-5															36.9																			
255+18 LT.	MOD. CLASS IV	30	20		25-10					12.04														12.2															
255+38 RT.	CLASS I	10	14		15-10					2.98														3.0															
256+27 LT.	CLASS II	12	14		25-15					3.76														3.8															
256+36 RT.	CLASS II	10	14		25-15					3.24														3.3															
257+15 RT.	CLASS II	10	16		25-15					3.61														3.7															
257+31 LT.	CLASS II	12	16		25-15					4.20														4.2															
257+37 RT.	CLASS II	10	18		25-15					3.98														4.0															
258+25 LT.	MOD. CLASS II	10	13		15-15					2.43														2.5															
258+84 RT.	CLASS II	20	20		25-15					8.01														8.1															
259+37 RT.	STREET APPR.	24	32		30-35						9.18																												
259+42 LT.	MOD. CLASS II	14	13		15-15					3.39														3.4															
LINE "S-1-C" APPROACHES																																								
47+15 RT.	CLASS III	20	13		10-10															37.0																			
47+83 RT.	CLASS III	22	11		20-10															41.4																			
48+~~50~~ 55 RT.	CLASS III	~~30~~ 40	17		20-10															~~74.6~~ 93.5																			
50+96 LT.	CLASS III	30	9		20-10															44.8																			
TOTALS (MAINLINE INCLUDED)								2851	414	~~*79~~	681	1362	2357	1977	1428	864				~~849.1~~ 868.0			9.9	*79								138.9			343	1312	166			

LAWRENCE E. SLUHRE REGISTERED No. 18417 STATE OF INDIANA PROFESSIONAL ENGINEER

* ROUNDED QUANTITIES

MAY 1974

R-20622

TP106