CONTRACT No. B-22242

FEDERAL REGION NO.	STATE	PROJECT NO.	FISCAL YEAR	SHEET NO.	TOTAL SHEETS
5	IND.	IM-74-1(118)	1995	1	49

INDIANA DEPARTMENT OF TRANSPORTATION

BRIDGE PLANS

FOR SPANS OVER 20 FEET ON INTERSTATE 74

PROJECT NO.IM-74-1(118)

RP 26+58, 32+01, 32+71

DECK RECONSTRUCTION AND OVERLAY FOR STRUCTURES I-74-24-4937B OVER EAST FORK COAL CREEK IN SECTION 12, T-19-N, R-6-W, I-74-29-4941B OVER SPRING BRANCH CREEK IN SECTION 13, T-19-N, R-5-W, AND I-74-30-4942B OVER BLACK CREEK IN SECTION 18, T-19-N, R-4-W, ALL IN MONTGOMERY COUNTY, INDIANA.

INDEX

PROJECT	STRUCTURE	TYPE	SPAN	OVER	STATION
IM-74-1(118)	I-74-24-4937B	DECK RECONSTRUCTION AND OVERLAY	27'-0,36'-0,27'-0	E. FORK COAL CREEK	
	I-74-29-4941B		21'-0,28'-0,21'-0	SPRING BRANCH CREEK	
	I-74-30-4942B		38'-0,38'-0,38'-0	BLACK CREEK	

SHEET NO	SHEET DESIGNATION	SUBJECT	F.H.W.A. APPROVAL
1		TITLE SHEET	
2-4		TRAFFIC MAINTENANCE DETAILS	
~~5~~-6	~~D1~~-D2	GENERAL PLAN (4937B)	
7-8	D3-D4	APPROACH SLAB DETAILS	
9-10	D5-D6	CONCRETE BARRIER RAILING DETAILS	
~~11~~-12	~~D7~~-D8	GENERAL PLAN (4941B)	
13-14	D9-D10	APPROACH SLAB DETAILS	
15-16	D11-D12	CONCRETE BARRIER RAILING DETAILS	
17-18	D13-D14	GENERAL PLAN (4942B)	
19-20	D15-D16	APPROACH SLAB DETAILS	
21-22	D17-D18	CONCRETE BARRIER RAILING DETAILS	
23	D19	CONCRETE BRIDGE RAILING TRANSITION TYPE TGB MODIFIED	
24		BRIDGE SUMMARY	
5A	D1A	GENERAL PLAN (4937B)	
11A	D7A	GENERAL PLAN (4941B)	
11B	D7B	DETAILS	

TRAFFIC DATA	
A.D.T. (1992)	13,450 V.P.D.
A.D.T. (2012 PROJECTED)	24,700 V.P.D.
D.H.V. (2012 PROJECTED)	V.P.H.
TRUCKS	A.D.T. 35%
DESIGN SPEED	65 M.P.H.
ACCESS CONTROL	FULL
FUNCTIONAL CLASSIFICATION	FREEWAY

SCALE: 1"=1 MILE

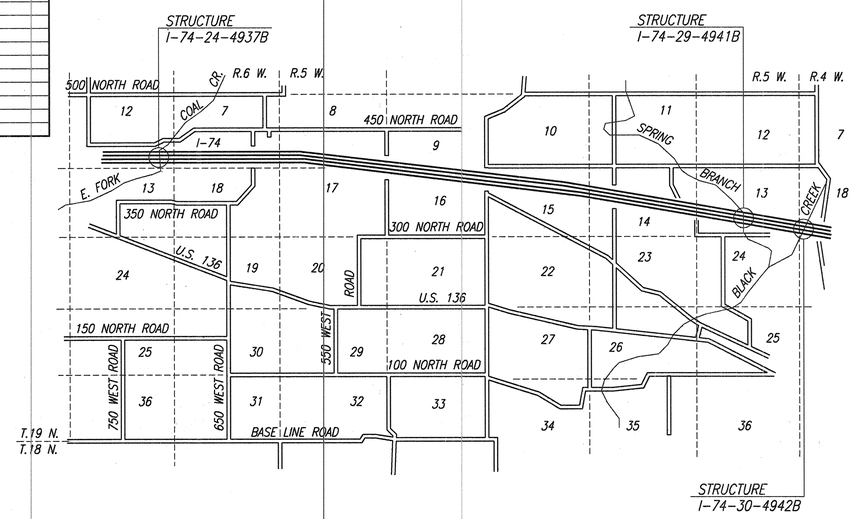

INDEX STANDARD CONTINUED DRAWINGS

SHEET NO.	SHEET DESIGNATION	SUBJECT	F.H.W.A. APPROVAL	ADOPTED "A" REVISION "R"
25	BRIDGE STD. BR-1	CONCRETE BRIDGE RAILING TRANSITION TYPE TGB	3-9-93	A AUG. 1992
26	BRIDGE STD. BR-1A	CONCRETE BRIDGE RAILING TRANSITION TYPE TGB	3-9-93	A AUG. 1992
	BRIDGE STD. BR-2	CONCRETE BRIDGE RAILING TRANSITION TYPE WGB		
	BRIDGE STD. BR-2A	CONCRETE BRIDGE RAILING TRANSITION TYPE WGB		
27	BRIDGE STD. C1	MISCELLANEOUS DETAILS	1-26-93	A DEC. 1992
	BRIDGE STD. C2	MISCELLANEOUS DETAILS		
28	BRIDGE STD. C3	MISCELLANEOUS DETAILS	1-26-95	R 1-3-95
	BRIDGE STD. C4	MISCELLANEOUS DETAILS		
	BRIDGE STD. C5	PRECAST DECK PANEL DETAILS		
	BRIDGE STD. D	CASTING DETAILS ROADWAY DRAINS		
	BRIDGE STD. D1	ADJUSTING FRAME DETAILS FOR ROADWAY DRAINS		
	BRIDGE STD.			
	BRIDGE STD. PB	PRESTRESSED CONCRETE TYPE I-BEAMS		
	BRIDGE STD. PB	PRESTRESSED CONCRETE TYPE I-BEAMS		
	BRIDGE STD. PB6	PRESTRESSED BOX BEAMS		
	BRIDGE STD. PB	PRESTRESSED COMPOSITE BOX BEAMS WIDE		
	BRIDGE STD. PB	PRESTRESSED COMPOSITE BOX BEAMS WIDE		
	BRIDGE STD. PB10	TOLERANCES FOR FABRICATION OF PRESTRESSED BEAMS		
	BRIDGE STD. PB11	ELASTOMERIC BEARING PAD DETAILS		
	BRIDGE STD.			
	BRIDGE STD.			
	BRIDGE STD.			
	BRIDGE STD.			
	BRIDGE STD. R2B	BRIDGE LIGHTING DETAILS		
	BRIDGE STD. S1	MISCELLANEOUS DETAILS		
	BRIDGE STD. SH1	STEEL SHOE DETAILS		
	BRIDGE STD. SS-1	STRUCTURAL EXPANSION JOINTS CLASS SS, SHEET 1		
	BRIDGE STD. SS-2	STRUCTURAL EXPANSION JOINTS CLASS SS, SHEET 2		
	BRIDGE STD. T SHEET A	STANDARD TEMPORARY BRIDGE		
	BRIDGE STD. T SHEET B	STANDARD TEMPORARY BRIDGE		
	BRIDGE STD.			
29	ROAD STD. SHEET CCPJ-1	LONGITUDINAL JOINT	PENDING	R9-1-95
30	ROAD STD. SHEET CCPJ-4	TRANSVERSE CONSTRUCTION JOINT	PENDING	R9-1-95
31	ROAD STD. SHEET RCBA-1	REINFORCED CONCRETE BRIDGE APPROACH	PENDING	R10-2-95
32	ROAD STD. SHEET RCBA-2	REINFORCED CONCRETE BRIDGE APPROACH	PENDING	A 11-1-95
33	ROAD STD. SHEET MT3	MISCELLANEOUS STANDARDS	8-5-88	R 8-1-88
	ROAD STD. SHEET	MISCELLANEOUS STANDARDS		
34	ROAD STD. SHEET MT18	MISCELLANEOUS STANDARDS	1-6-88	A NOV. 1987
35	ROAD STD. SHEET MT19	MISCELLANEOUS STANDARDS	1-6-88	A NOV. 1987
	ROAD STD. SHEET	MISCELLANEOUS STANDARDS		
	ROAD STD. SHEET	MISCELLANEOUS STANDARDS		
	ROAD STD. SHEET	MISCELLANEOUS STANDARDS		
	ROAD STD. SHEET	MISCELLANEOUS STANDARDS		
	ROAD STD. SHEET	MISCELLANEOUS STANDARDS		
	ROAD STD. SHEET	MISCELLANEOUS STANDARDS		
	ROAD STD. SHEET	MISCELLANEOUS STANDARDS		
	ROAD STD. SHEET	MISCELLANEOUS STANDARDS		
	ROAD STD. SHEET	MISCELLANEOUS STANDARDS		
	ROAD STD. SHEET	MISCELLANEOUS STANDARDS		
36	ROAD STD. SHEET G-1	W-BEAM GUARDRAIL COMPONENTS	3-9-93	A AUG. 1992
37	ROAD STD. SHEET G-2	THRIE-BEAM GUARDRAIL COMPONENTS	7-20-92	A Dec. 1991
38	ROAD STD. SHEET G-3	W-BEAM GUARDRAIL ASSEMBLIES	7-20-92	A Dec. 1991
39	ROAD STD. SHEET T-1	GUARDRAIL TRANSITION TYPE TGB	3-9-93	A AUG. 1992
	ROAD STD. SHEET T-1A	GUARDRAIL TRANSITION TYPE WGB		
	ROAD STD. SHEET T-2	GUARDRAIL TRANSITION TYPE GP		
	ROAD STD. SHEET T-3	GUARDRAIL TRANSITION TYPE VH		
	ROAD STD. SHEET T-4	PIER CONNECTION DETAILS		
	ROAD STD. SHEET E-1	GUARDRAIL END TREATMENT TYPE I		
40	ROAD STD. SHEET E-2	GUARDRAIL END TREATMENT TYPE OS	PENDING	R11-1-95
41	ROAD STD. SHEET E-3	GUARDRAIL END TREATMENT TYPE MS	PENDING	R11-1-95
	ROAD STD. SHEET E-4	CURVED W-BEAM GUARDRAIL SYSTEM		
	ROAD STD. SHEET E-4A	CURVED W-BEAM GUARDRAIL SYSTEM		
	ROAD STD. SHEET E-4B	CURVED W-BEAM GUARDRAIL SYSTEM		
	ROAD STD. SHEET H-1	TWO-WAY TWO-LANE ROADSIDE HAZARD PROTECTION GUARDRAIL SYSTEM		
	ROAD STD. SHEET H-2	MULTI-LANE DIVIDED ROADSIDE HAZARD PROTECTION GUARDRAIL SYSTEM		
42	ROAD STD. SHEET B-1	BRIDGE APPROACH GUARDRAIL	3-9-93	A AUG. 1992
	ROAD STD. SHEET P-1	TWO-WAY TWO-LANE ROADSIDE PIER PROTECTION GUARDRAIL		
	ROAD STD. SHEET P-2	MULTI-LANE DIVIDED ROADSIDE PIER PROTECTION GUARDRAIL		
	ROAD STD. SHEET P-3	MULTI-LANE DIVIDED MEDIAN SIDE PIER PROTECTION GUARDRAIL		
43	ROAD STD. SHEET CB2	TEMPORARY CONCRETE BARRIER	PENDING	R 5-1-95
44	ROAD STD. SHEET CB2A	TEMPORARY CONCRETE BARRIER	1-21-94	A NOV. 1993
45	ROAD STD. SHEET 1 DETOURS	STANDARD DETOUR SIGNS	PENDING	A SEP. 1988
	ROAD STD. SHEET 1A DETOURS	STANDARD DETOUR SIGNS		
	ROAD STD. SHEET 1B DETOURS	STANDARD DETOUR SIGNS		
	ROAD STD. SHEET 2 DETOURS	STANDARD DETOUR SIGNS		
46	ROAD STD. SHEET 2A DETOURS	STANDARD DETOUR SIGNS	PENDING	R10-2-95
47	ROAD STD. SHEET 3 DETOURS	STANDARD DETOUR SIGNS	PENDING	R 9-1-88
	ROAD STD. SHEET 3A DETOURS	STANDARD DETOUR SIGNS		
48	ROAD STD. SHEET 4 DETOURS	STANDARD DETOUR SIGNS	1-11-89	R 9-1-88
	ROAD STD. SHEET 5 DETOURS	STANDARD DETOUR SIGNS		
49	ROAD STD. SHEET 5A DETOURS	STANDARD DETOUR SIGNS	PENDING	R 9-1-88

B-22242

PREPARED BY:

UNITED CONSULTING ENGINEERS & ARCHITECTS

1625 N. POST ROAD, INDIANAPOLIS, INDIANA 46219

(317) 895-2585

CERTIFIED BY Jerry D. Ritchie DATE 10-31-95

JERRY D. RITCHIE REGISTERED No. 12868 STATE OF INDIANA PROFESSIONAL ENGINEER

APPROVED FOR LETTING _____ DATE _____

CHIEF, DIVISION OF DESIGN

MONTGOMERY COUNTY

APPROVED Philip H. Klika

CHIEF, DIVISION OF DESIGN

FEDERAL HIGHWAY ADMINISTRATION
DEPARTMENT OF TRANSPORTATION

APPROVED:

DIVISION ADMINISTRATOR DATE

BRIDGE FILE: I-74-24-4937B, I-74-29-4941B, I-74-30-4942B

INDIANA DEPARTMENT OF TRANSPORTATION
STANDARD SPECIFICATIONS DATED 1995
TO BE USED WITH THESE PLANS.

DES. NO. 9408320, 9408310, 9408330

REVISIONS	
DATE	SHEET NO.
12/21/95	1,2,3 & 4
06-12-96	DELETED SHEETS 5 & 11, ADDED SHEETS 5A, 11A & 11B

REVISIONS	
DATE	SHEET NO.

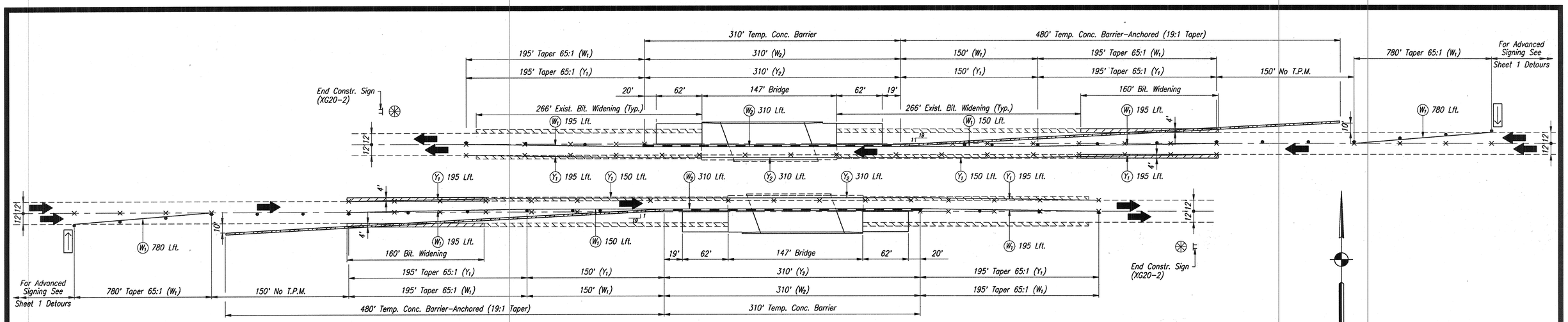

PHASE I

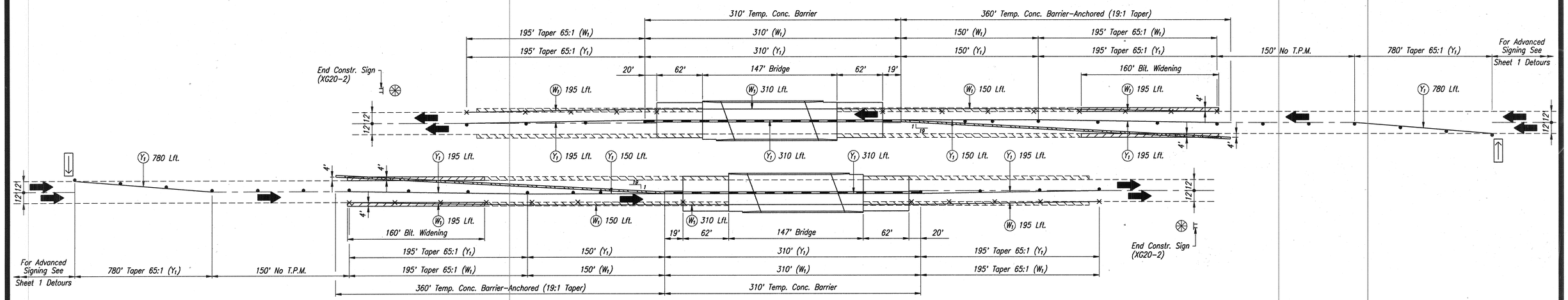

PHASE II

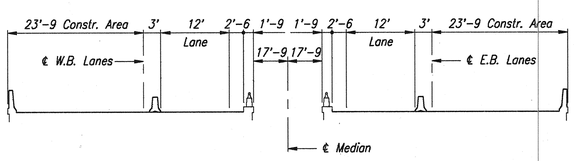

PHASE I

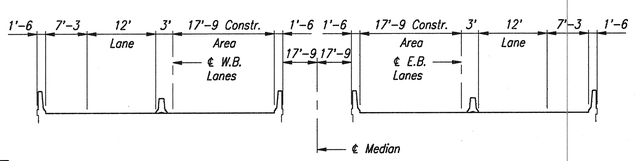

PHASE II

LEGEND

- Existing Bituminous Widening
- Bituminous Widening (141 Tons)
- Temporary Concrete Barrier, Anchored (960 Lft.)
- Temporary Concrete Barrier (620 Lft.)
- Flashing Arrow Sign
- Drum with Type "C" Steady Burning Light (not a pay item)
- Removal of Line (3,518 Lft.)
- Construction Sign
- Type A Construction Warning Light
- (W1) Temporary Pavement Marking, Type I White (4,340 Lft.)
- (W2) Temporary Pavement Marking, Type II White (620 Lft.)
- (Y1) Temporary Pavement Marking, Type I Yellow (4,340 Lft.)
- (Y2) Temporary Pavement Marking, Type II Yellow (620 Lft.)

BITUMINOUS QUANTITIES

Bituminous Widening	141 Tons
Bituminous Wedge	35 Tons
Total Bit. Mixture for Appr., H.V.	176 Tons

PAVEMENT MARKING QUANTITIES

Line, Paint, Solid, White 4"	1700 Lft.
Line, Paint, Solid, Yellow 4"	1700 Lft.
Line, Paint, Broken, White 5"	815 Lft.
Snowplowable Raised Pavement Markers	8 Each

NOTE:
2 Lane Closure Notice Signs (XG20-5) Required to be Placed as Directed by the Engineer

Rev. 12/21/95 Line, Paint, Broken, White

TRAFFIC MAINTENANCE DETAILS

INDIANA DEPARTMENT OF TRANSPORTATION

MONTGOMERY COUNTY

SCALE: None

DATE: October 31, 1995

Jerry D. Ritchie

JERRY D. RITCHIE REGISTERED No. 12868 STATE OF INDIANA PROFESSIONAL ENGINEER

DRAWING: OF SHEET: 2 OF 49

PROJECT: IM-74-1(118)

BRIDGE CONTRACT NO. B-22242

BRIDGE FILE: I-74-24-4937B

DESIGNED	J.D.R.	CK'D.	W.K.S.
DRAWN	W.K.S.	CK'D.	J.D.R.
TRACED		CK'D.	

94-223-07A\TMCT001 1=600

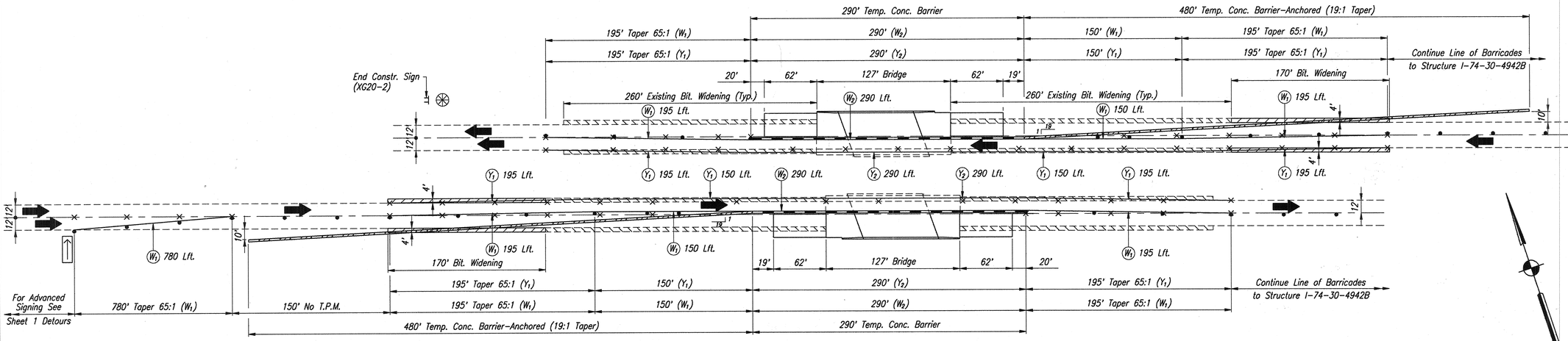

PHASE I

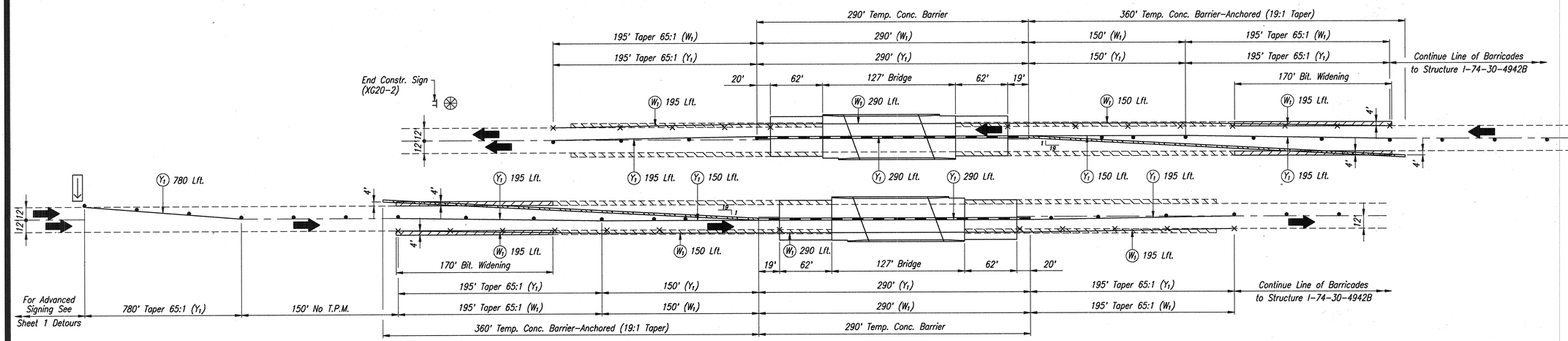

PHASE II

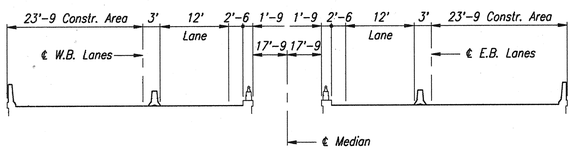

PHASE I

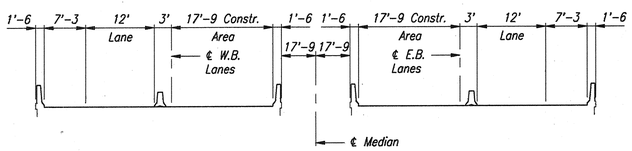

PHASE II

LEGEND

- Existing Bituminous Widening
- Bituminous Widening (150 Tons)
- Temporary Concrete Barrier, Anchored (960 Lft.)
- Temporary Concrete Barrier (580 Lft.)
- Flashing Arrow Sign
- Drum with Type "C" Steady Burning Light (not a pay item)
- Removal of Line (3,283 Lft.)
- Construction Sign
- Type A Construction Warning Light
- (W1) Temporary Pavement Marking, Type I White (3,520 Lft.)
- (W2) Temporary Pavement Marking, Type II White (580 Lft.)
- (Y1) Temporary Pavement Marking, Type I Yellow (3,520 Lft.)
- (Y2) Temporary Pavement Marking, Type II Yellow (580 Lft.)

Rev. 12/21/95 Line, Paint, Broken, White

BITUMINOUS QUANTITIES

Bituminous Widening	150 Tons
Bituminous Wedge	35 Tons
Total Bit. Mixture for Appr., H.V.	185 Tons

PAVEMENT MARKING QUANTITIES

Line, Paint, Solid, White 4"	1660 Lft.
Line, Paint, Solid, Yellow 4"	1660 Lft.
Line, Paint, Broken, White 5"	610 Lft.
Snowplowable Raised Pavement Markers	8 Each

NOTE:
1 Lane Closure Notice Sign (XG20-5) Required to be Placed as Directed by the Engineer

TRAFFIC MAINTENANCE DETAILS

INDIANA DEPARTMENT OF TRANSPORTATION

MONTGOMERY COUNTY

SCALE: None

DATE: October 31, 1995

Jerry D. Ritchie

JERRY D. RITCHIE REGISTERED No. 12868 STATE OF INDIANA PROFESSIONAL ENGINEER

DRAWING: OF SHEET: 3 OF 49

PROJECT: IM-74-1(118)

BRIDGE CONTRACT NO. B-22242

BRIDGE FILE: I-74-29-4941B

DESIGNED	J.D.R.	CK'D.	W.K.S.
DRAWN	W.K.S.	CK'D.	J.D.R.
TRACED		CK'D.	

94-223-08A (MISC) 1=600

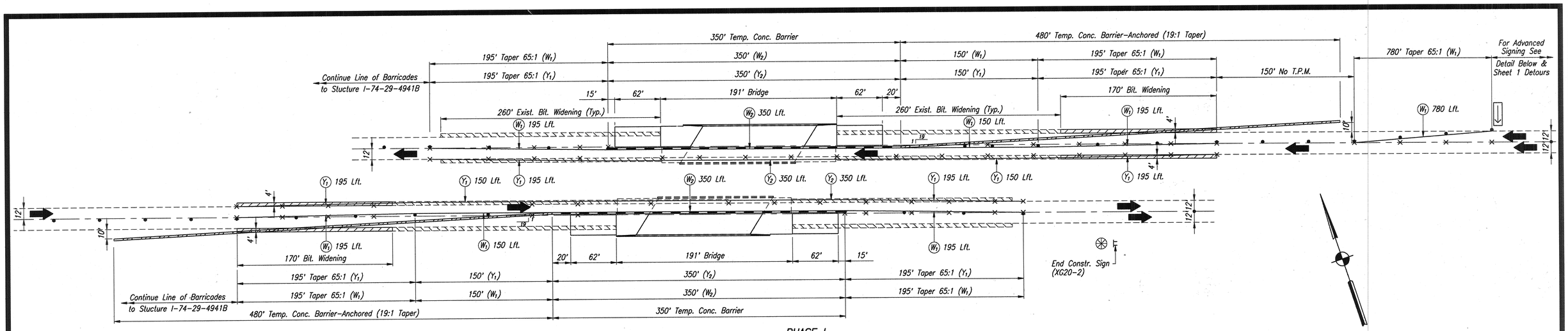

PHASE I

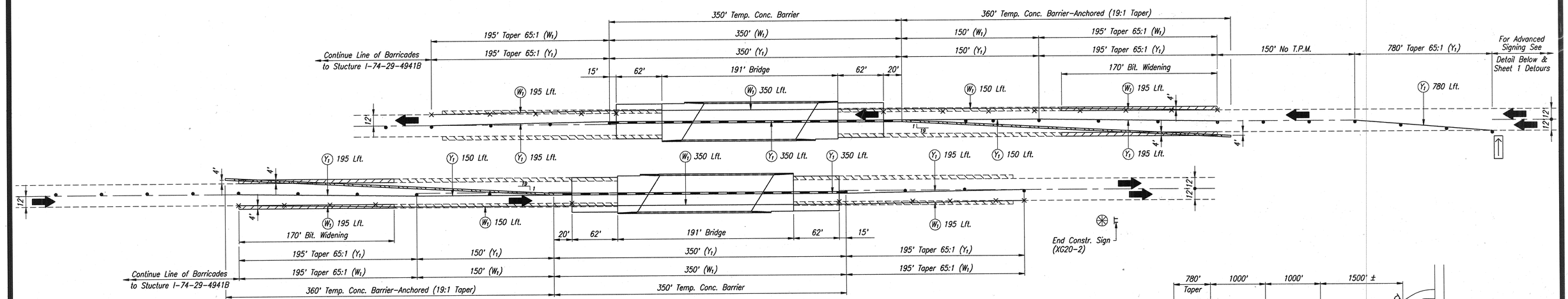

PHASE II

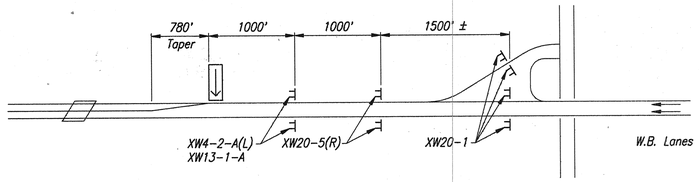

ADVANCE SIGNING PLAN – W.B. LANES

NO SCALE

NOTE:
1 Lane Closure Notice Sign (XG20-5) Required to be Placed as Directed by the Engineer

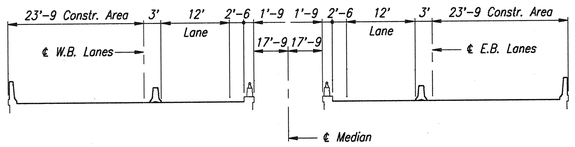

PHASE I

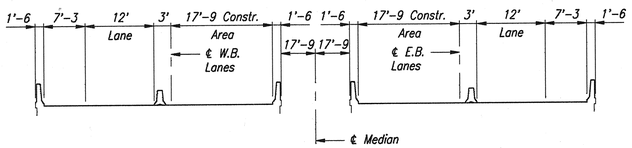

PHASE II

LEGEND

- Existing Bituminous Widening
- Bituminous Widening (150 Tons)
- Temporary Concrete Barrier, Anchored (960 Lft.)
- Temporary Concrete Barrier (700 Lft.)
- Flashing Arrow Sign
- Drum with Type "C" Steady Burning Light (not a pay item)
- Removal of Line (3,395 Lft.)
- Construction Sign
- Type A Construction Warning Light
- W1 Temporary Pavement Marking, Type I White (3,640 Lft.)
- W2 Temporary Pavement Marking, Type II White (700 Lft.)
- Y1 Temporary Pavement Marking, Type I Yellow (3,640 Lft.)
- Y2 Temporary Pavement Marking, Type II Yellow (700 Lft.)

BITUMINOUS QUANTITIES

Bituminous Widening	150 Tons
Bituminous Wedge	35 Tons
Total Bit. Mixture for Appr., H.V.	185 Tons

PAVEMENT MARKING QUANTITIES

Line, Paint, Solid, White 4"	1780 Lft.
Line, Paint, Solid, Yellow 4"	1780 Lft.
Line, Paint, Broken, White 5"	640 Lft.
Snowplowable Raised Pavement Markers	8 Each

Rev. 12/21/95 Line, Paint, Broken, White

TRAFFIC MAINTENANCE DETAILS

INDIANA DEPARTMENT OF TRANSPORTATION

MONTGOMERY COUNTY

SCALE: None

DATE: October 31, 1995

Jerry D. Ritchie

JERRY D. RITCHIE REGISTERED No. 12868 STATE OF INDIANA PROFESSIONAL ENGINEER

DRAWING: OF SHEET: 4 OF 49

PROJECT: IM-74-1(118)

BRIDGE CONTRACT NO. B-22242

BRIDGE FILE: I-74-30-4942B

DESIGNED	J.D.R.	CK'D.	W.K.S.
DRAWN	W.K.S.	CK'D.	J.D.R.
TRACED		CK'D.	

94-223-09A\TABS\1=600

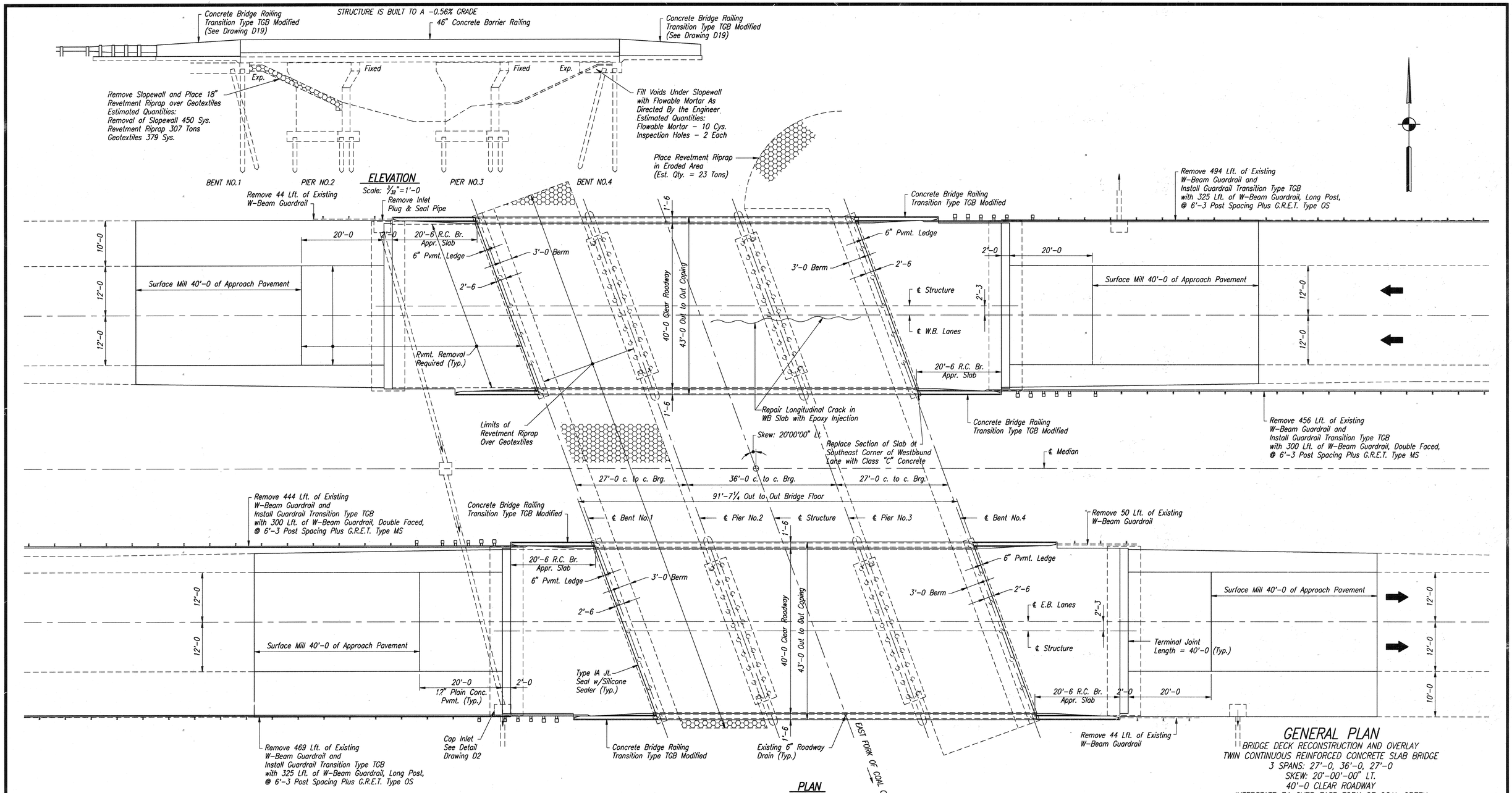

GENERAL PLAN

BRIDGE DECK RECONSTRUCTION AND OVERLAY
TWIN CONTINUOUS REINFORCED CONCRETE SLAB BRIDGE
3 SPANS: 27'-0, 36'-0, 27'-0
SKEW: 20°-00'-00" LT.
40'-0 CLEAR ROADWAY
INTERSTATE 74 OVER EAST FORK OF COAL CREEK

PLAN

Scale: 3/32"=1'-0

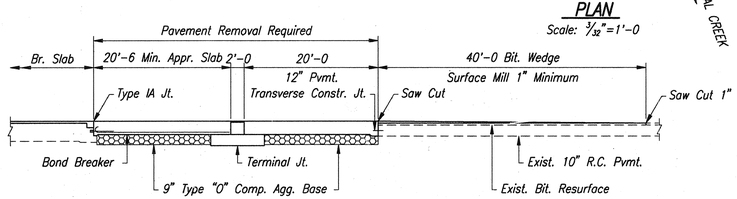

HALF LONGITUDINAL SECTION

No Scale

INDIANA DEPARTMENT OF TRANSPORTATION

MONTGOMERY COUNTY

SCALE: As Noted

DATE: JUNE 10, 1996

Jerry D. Ritchie

DRAWING: D1A OF D19 SHEET: 5A OF 49
PROJECT: IM-74-1(118)
BRIDGE CONTRACT NO. B-22242
BRIDGE FILE: I-74-24-4937B

JERRY D. RITCHIE REGISTERED No. 12868 STATE OF INDIANA PROFESSIONAL ENGINEER

Rev.: 06-12-96; Added A on Drwg. D1

DESIGNED	J.D.R.	CK'D.	W.K.S.
DRAWN	W.K.S.	CK'D.	J.D.R.
TRACED		CK'D.	

94-223-07A\DPT\CT1 1=128

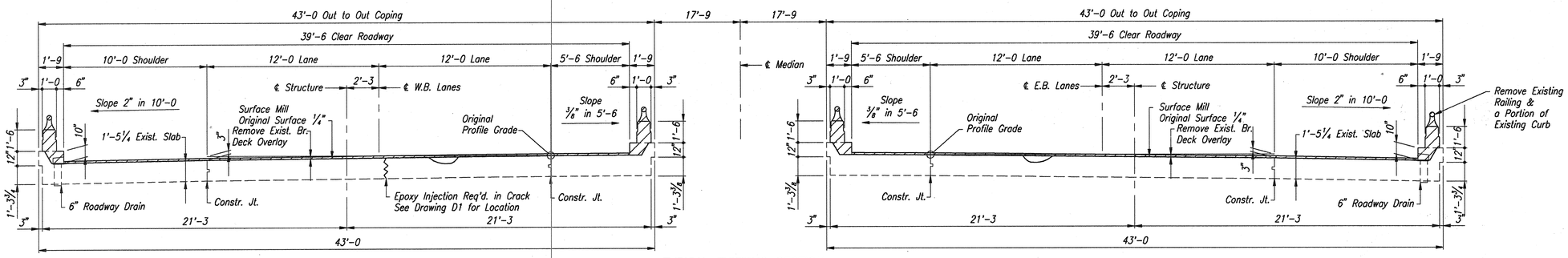

TYPICAL EXISTING SECTION

Scale: 1/4"=1'-0

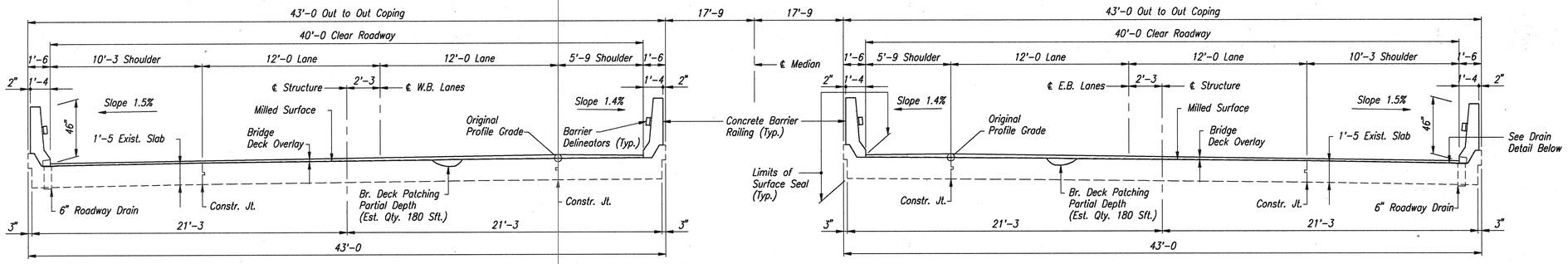

TYPICAL PROPOSED SECTION

Scale: 1/4"=1'-0

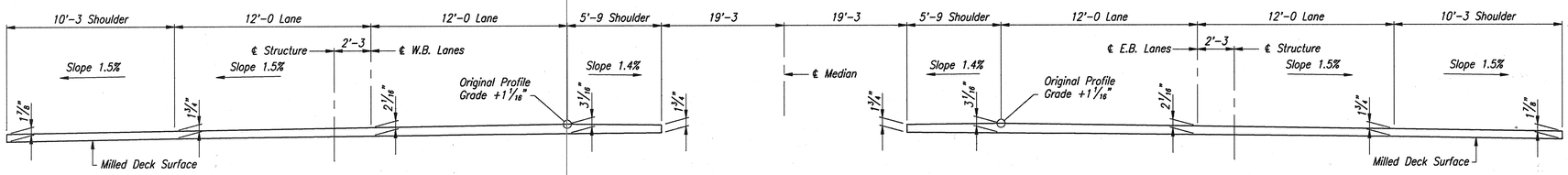

TYPICAL OVERLAY SECTION

No Scale

NOTE:
The Bridge Deck Overlay Shall be Placed to the Section Shown Above.
The Extra Overlay Required for the Thicker Sections and the Overlay Dams will be Included in the Pay Item "Additional Bridge Deck Overlay" in Cys.

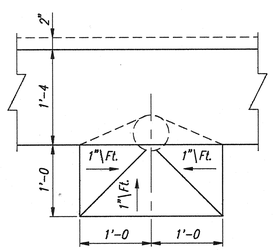

DRAIN PLAN

Scale: 1"=1'-0

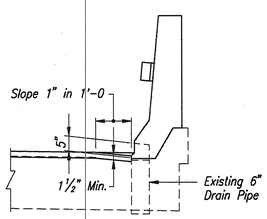

DRAIN DETAIL

Scale: 1/2"=1'-0

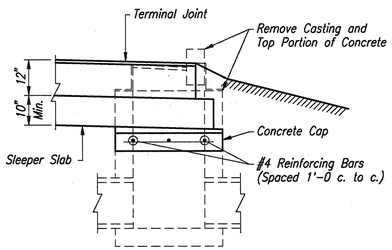

CAP INLET DETAIL

Scale: 1/2"=1'-0

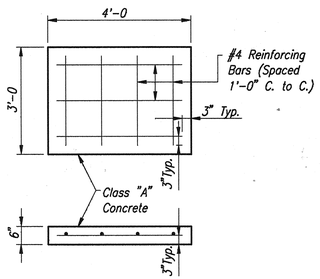

REINFORCED CONCRETE CAP DETAIL

Scale: 1/2"=1'-0

LEGEND

Indicates Removal Items

GENERAL NOTES

Plans for these structures are on file in the Central Office, INDOT as Bridge File No. I-74-24-4937 and I-74-24-4937A and are available upon request.

Reinforcing steel covering shall be 2" in all parts, unless noted.

Surface Seal railing and outside of coping (Est. Qty. 3,800 Sft.)

All bituminous material for this contract is to be included in the pay item "Bituminous Mixture for Approaches HV" except tack coat which is to be paid for as "Bituminous Material For Tack Coat" in Sys.

STANDARD DRAWINGS

BRIDGE	ROAD	PURPOSE
BR-1		Conc. Bridge Railing Transition Type TGB
BR-1A		Conc. Bridge Railing Transition Type TGB
C1		Reinforcing Bar Notes
C3		Joints
	CCPJ-1	Longitudinal Joint
	CCPJ-4	Transverse Construction Joint
	RCBA-1	Reinforced Concrete Bridge Approach
	RCBA-2	Reinforced Concrete Bridge Approach
	MT3	Traffic Sign Details
	MT18	Snowplowable Markers
	MT19	Snowplowable Markers
	G-1	W-Beam Guard Rail Components
	G-2	Thrie-Beam Guard Rail Components
	G-3	W-Beam Guard Rail Assemblies
	T-1	Guard Rail Transition Type TGB
	E-2	Guard Rail End Treatment Type OS
	E-3	Guard Rail End Treatment Type MS
	B-1	Typical Bridge Approach Guard Rail
	CB2	Temporary Concrete Barrier
	CB2A	Temporary Concrete Barrier
	Sht. 1	Standard Detour Signs
	Sht. 2A	Standard Detour Signs
	Sht. 3	Standard Detour Signs
	Sht. 4	Standard Detour Signs
	Sht. 5A	Standard Detour Signs

MATERIAL NOTES

BRIDGE DECK OVERLAY
1 1/4" Modified Portland Cement Concrete (1 1/2" Above Original Concrete Surface)

BITUMINOUS WEDGE
Variable Depth H.A.C. Surface Type 11, HV (Min. 82.5 Lbs.\Sys.)

TERMINAL JOINT
110 Lbs.\Sys. H.A.C. Surface Type 11, H.V., over 1210 Lbs.\Sys. Bit. Base Type 5, H.V.

BITUMINOUS WIDENING
990 Lbs.\Sys. Bit. Base, Type 5, H.V.

GENERAL PLAN

BRIDGE DECK RECONSTRUCTION AND OVERLAY
TWIN CONTINUOUS REINFORCED CONCRETE SLAB BRIDGE
3 SPANS: 27'-0, 36'-0, 27'-0
SKEW: 20°-00'-00" LT.
40'-0 CLEAR ROADWAY
INTERSTATE 74 OVER EAST FORK OF COAL CREEK

INDIANA DEPARTMENT OF TRANSPORTATION

MONTGOMERY COUNTY

SCALE: As Noted

DATE: October 31, 1995

Jerry D. Ritchie

JERRY D. RITCHIE REGISTERED No. 12868 STATE OF INDIANA PROFESSIONAL ENGINEER

DRAWING: D2 OF D19 SHEET: 6 OF 49
PROJECT: IM-74-1(118)
BRIDGE CONTRACT NO. B-22242
BRIDGE FILE: I-74-24-4937B

DESIGNED	J.D.R.	ck'd.	W.K.S.
DRAWN	W.K.S.	ck'd.	J.D.R.
TRACED		ck'd.	

94-221-074 (PSTCD) 1=48

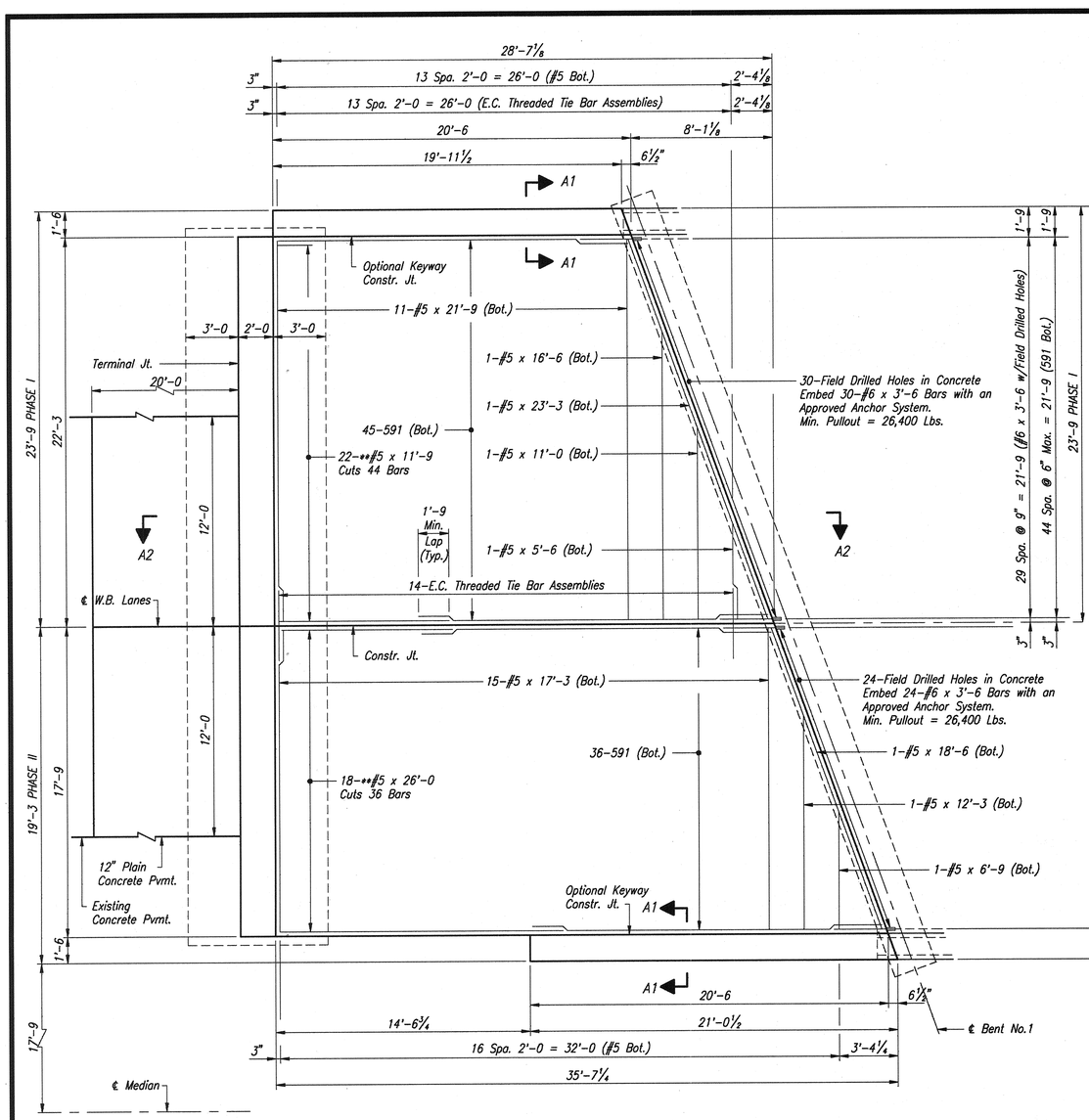

PLAN
(W.B. Bent No.1 Shown, E.B. Bent No.4 Same by 180° Rotation)
Scale: 1/4"=1'-0

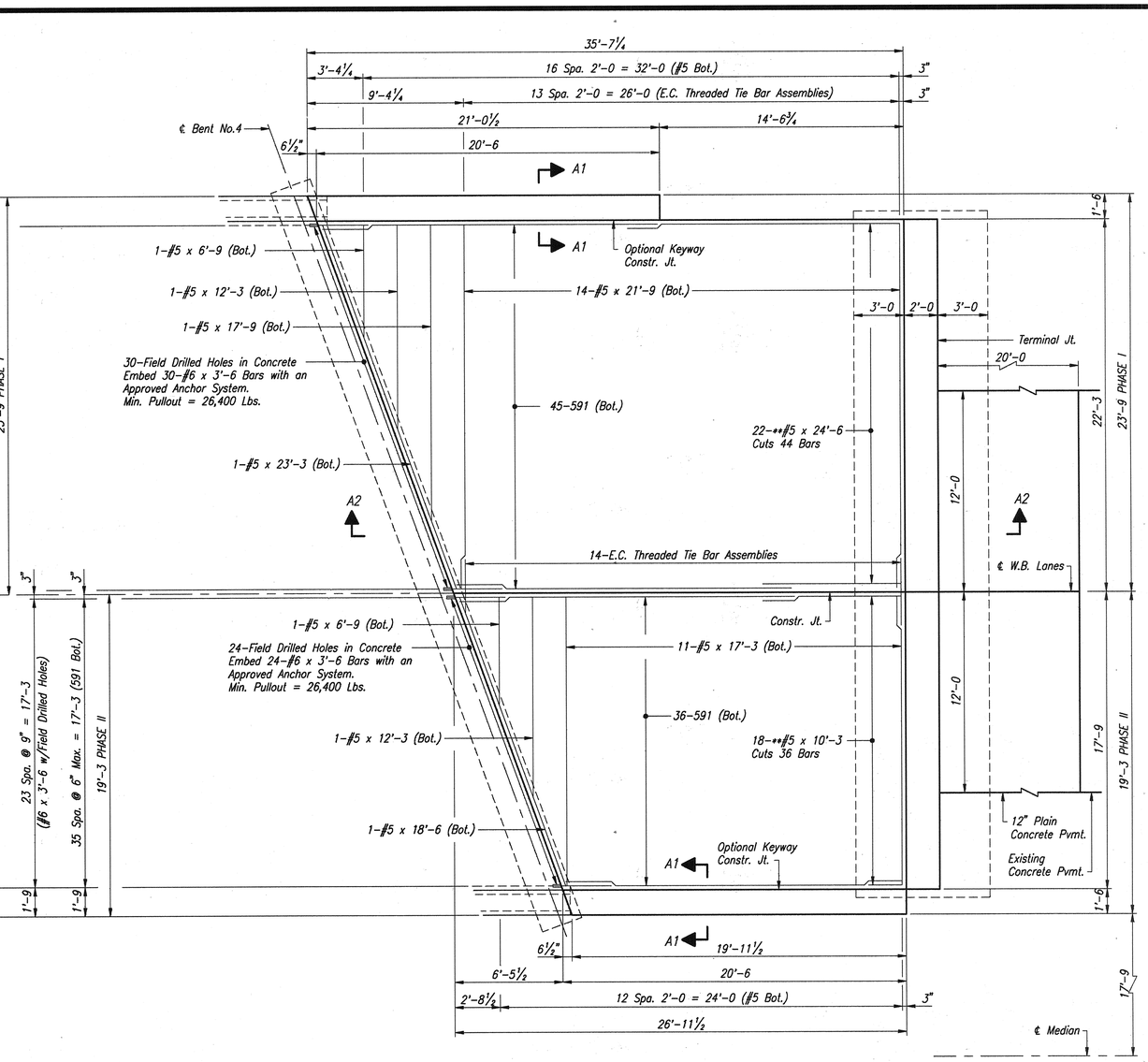

PLAN
(W.B. Bent No.4 Shown, E.B. Bent No.1 Same by 180° Rotation)
Scale: 1/4"=1'-0

For Section "A1-A1" and "A2-A2", see Drawing D4

APPROACH SLAB DETAILS

INDIANA DEPARTMENT OF TRANSPORTATION

MONTGOMERY COUNTY

SCALE: As Noted

DATE: October 31, 1995

Jerry D. Ritchie

DRAWING: D3 OF D19 SHEET: 7 OF 49
PROJECT: IM-74-1(118)
BRIDGE CONTRACT NO. B-22242
BRIDGE FILE: I-74-24-4937B

JERRY D. RITCHIE REGISTERED No. 12868 STATE OF INDIANA PROFESSIONAL ENGINEER

DESIGNED	J.D.R.	CK'D.	W.K.S.
DRAWN	W.K.S.	CK'D.	J.D.R.
TRACED		CK'D.	

94-223-07\APPROTCC\1=48

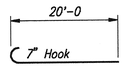

591 x 20'-7

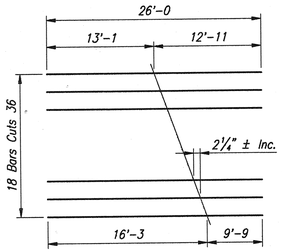

CUTTING DIAGRAM
**#5 x 26'-0

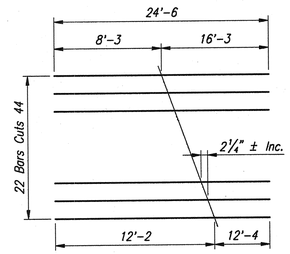

CUTTING DIAGRAM
**#5 x 24'-6

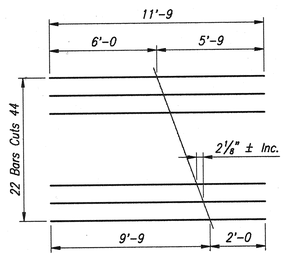

CUTTING DIAGRAM
**#5 x 11'-9

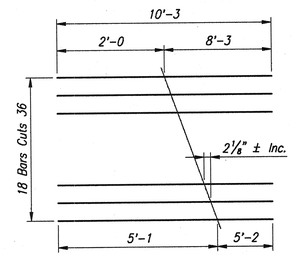

CUTTING DIAGRAM
**#5 x 10'-3

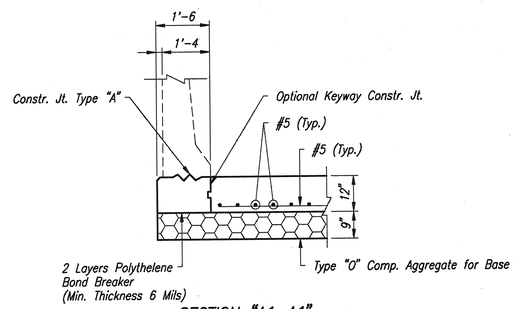

SECTION "A1-A1"
Scale: ½"=1'-0

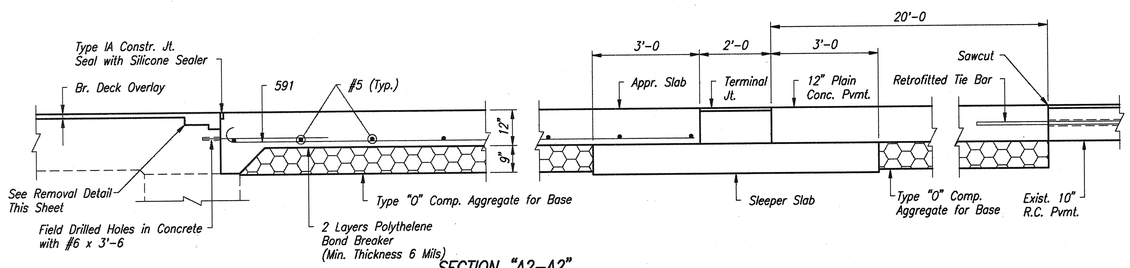

SECTION "A2-A2"
Scale: ½"=1'-0

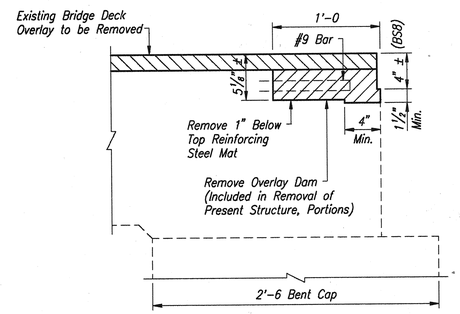

REMOVAL DETAIL – OVERLAY DAM
Scale: 1½"=1'-0

BILL OF MATERIALS
APPROACH SLAB
W.B. PHASE I

EPOXY COATED REINFORCING STEEL

Size or Mark	No. of Bars	Length	Weight (lbs.)
#6	60	3'-6	315 lbs.
591	90	20'-7	
**#5	22	24'-6	
#5	2	23'-3	
#5	25	21'-9	
#5	1	17'-9	
#5	1	16'-6	
#5	1	12'-3	
**#5	22	11'-9	
#5	1	11'-0	
#5	1	6'-9	
#5	1	5'-6	
		Total #5	3,452 lbs.
Total Epoxy Coated Reinforcing			3,767 lbs.
12" R.C. CONCRETE PAVEMENT			
Bent No.1			64.1 Sys.
Bent No.4			81.4 Sys.
Total 12" R.C. Conc. Pavement			145.5 Sys.
12" Plain Conc. Pavement			53.3 Sys.
MISCELLANEOUS			
Type "O" Comp. Aggregate for Base			99 Tons
Field Drilled Holes in Concrete			60 Each
E.C. Threaded Tie Bar Assemblies			28 Each
Terminal Joint			45 Lft.
Retrofitted Tie Bar			24 Each
Concrete Bridge Railing Transition Type TGB, Modified			2 Each

BILL OF MATERIALS
APPROACH SLAB
W.B. PHASE II

EPOXY COATED REINFORCING STEEL

Size or Mark	No. of Bars	Length	Weight (lbs.)
#6	48	3'-6	252 lbs.
591	72	20'-7	
**#5	18	26'-0	
#5	2	18'-6	
#5	26	17'-3	
#5	2	12'-3	
**#5	18	10'-3	
#5	2	6'-9	
		Total #5	2,772 lbs.
Total Epoxy Coated Reinforcing			3,024 lbs.
12" R.C. CONCRETE PAVEMENT			
Bent No.1			62.2 Sys.
Bent No.4			50.2 Sys.
Total 12" R.C. Conc. Pavement			112.4 Sys.
12" Plain Conc. Pavement			53.3 Sys.
MISCELLANEOUS			
Type "O" Comp. Aggregate for Base			83 Tons
Field Drilled Holes in Concrete			48 Each
Terminal Joint			36 Lft.
Retrofitted Tie Bar			24 Each
Concrete Bridge Railing Transition Type TGB, Modified			2 Each

BILL OF MATERIALS
APPROACH SLAB
E.B. PHASE I

EPOXY COATED REINFORCING STEEL

Size or Mark	No. of Bars	Length	Weight (lbs.)
#6	60	3'-6	315 lbs.
591	90	20'-7	
**#5	22	24'-6	
#5	2	23'-3	
#5	25	21'-9	
#5	1	17'-9	
#5	1	16'-6	
#5	1	12'-3	
**#5	22	11'-9	
#5	1	11'-0	
#5	1	6'-9	
#5	1	5'-6	
		Total #5	3,452 lbs.
Total Epoxy Coated Reinforcing			3,767 lbs.
12" R.C. CONCRETE PAVEMENT			
Bent No.1			64.1 Sys.
Bent No.4			81.4 Sys.
Total 12" R.C. Conc. Pavement			145.5 Sys.
12" Plain Conc. Pavement			53.3 Sys.
MISCELLANEOUS			
Type "O" Comp. Aggregate for Base			99 Tons
Field Drilled Holes in Concrete			60 Each
E.C. Threaded Tie Bar Assemblies			28 Each
Terminal Joint			45 Lft.
Retrofitted Tie Bar			24 Each
Concrete Bridge Railing Transition Type TGB, Modified			2 Each

BILL OF MATERIALS
APPROACH SLAB
E.B. PHASE II

EPOXY COATED REINFORCING STEEL

Size or Mark	No. of Bars	Length	Weight (lbs.)
#6	48	3'-6	252 lbs.
591	72	20'-7	
**#5	18	26'-0	
#5	2	18'-6	
#5	26	17'-3	
#5	2	12'-3	
**#5	18	10'-3	
#5	2	6'-9	
		Total #5	2,772 lbs.
Total Epoxy Coated Reinforcing			3,024 lbs.
12" R.C. CONCRETE PAVEMENT			
Bent No.1			62.2 Sys.
Bent No.4			50.2 Sys.
Total 12" R.C. Conc. Pavement			112.4 Sys.
12" Plain Conc. Pavement			53.3 Sys.
MISCELLANEOUS			
Type "O" Comp. Aggregate for Base			83 Tons
Field Drilled Holes in Concrete			48 Each
Terminal Joint			36 Lft.
Retrofitted Tie Bar			24 Each
Concrete Bridge Railing Transition Type TGB, Modified			2 Each

NOTE:
All Reinforcing is to Epoxy Coated
For Reinforcing Bar Notes, see Bridge Standard C1
For Construction Joint Type "A", see Bridge Standard C3
** – Indicates Cutting Diagram Required
For Location of Section "A1-A1" and "A2-A2", see Drawing D3

APPROACH SLAB DETAILS

INDIANA DEPARTMENT OF TRANSPORTATION

MONTGOMERY COUNTY

SCALE: As Noted

DATE: October 31, 1995

Jerry D. Ritchie

JERRY D. RITCHIE REGISTERED No. 12868 STATE OF INDIANA PROFESSIONAL ENGINEER

DRAWING: D4 OF D19 SHEET: 8 OF 49
PROJECT: IM-74-1(118)
BRIDGE CONTRACT NO. B-22242
BRIDGE FILE: I-74-24-4937B

DESIGNED	J.D.R.	C'K'D.	W.K.S.
DRAWN	W.K.S.	C'K'D.	J.D.R.
TRACED		C'K'D.	

94-223-07A\APPROCCB\1-48

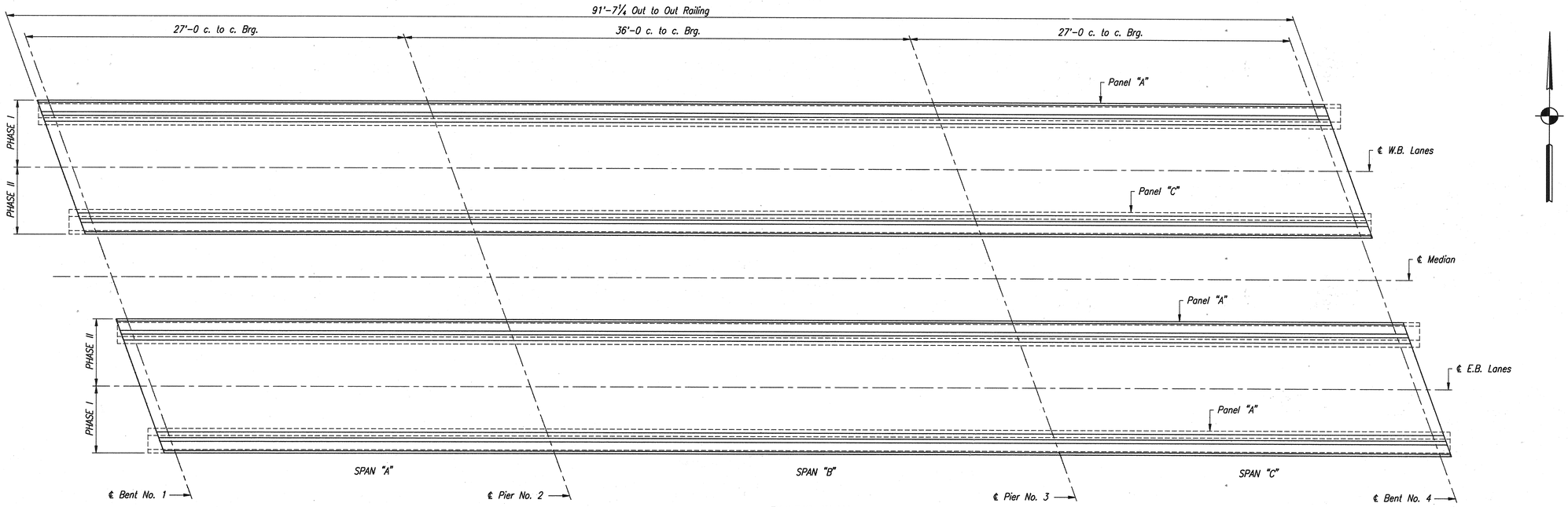

RAILING PLAN

No Scale

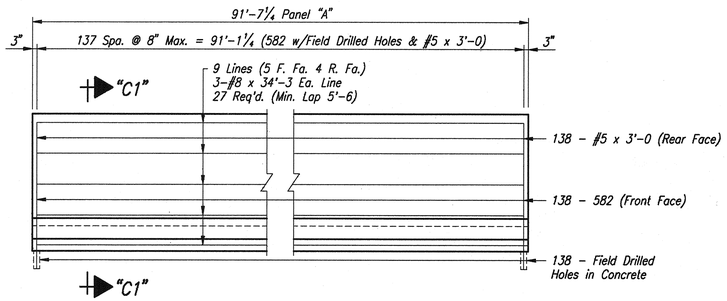

PANEL "A" ELEVATION

Scale: ¼"=1'-0 Horiz.; ½"=1'-0 Vert.

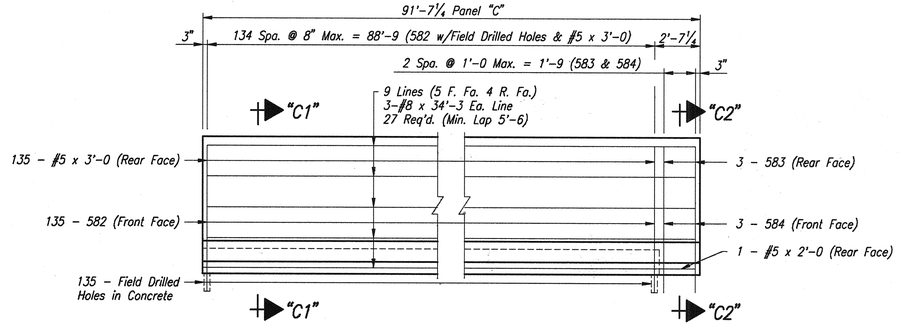

PANEL "C" ELEVATION

Scale: ¼"=1'-0 Horiz.; ½"=1'-0 Vert.

NOTES:

For Reinforcing Bar Notes, see Bridge Standard Sheet C1.
For Section "C1-C1" & "C2-C2", see Drawing D6

CONCRETE BARRIER RAILING DETAILS

INDIANA DEPARTMENT OF TRANSPORTATION

MONTGOMERY COUNTY

SCALE: As Noted

DATE: October 31, 1995

Jerry D. Ritchie

JERRY D. RITCHIE REGISTERED No. 12868 STATE OF INDIANA PROFESSIONAL ENGINEER

DRAWING: D5 OF D19 SHEET: 9 OF 49
PROJECT: IM-74-1(118)
BRIDGE CONTRACT NO. B-22242
BRIDGE FILE: I-74-24-4937B

94-223-07A\CBRETCC\1=48

DESIGNED	J.D.R.	CKD.	W.K.S.
DRAWN	W.K.S.	CKD.	J.D.R.
TRACED		CKD.	

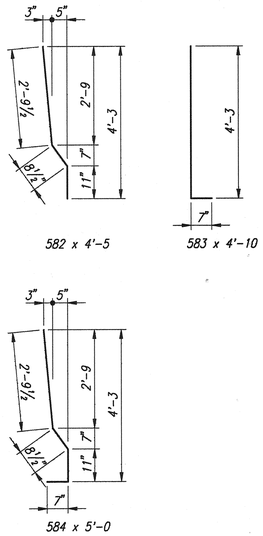

BAR BENDING DETAILS
No Scale

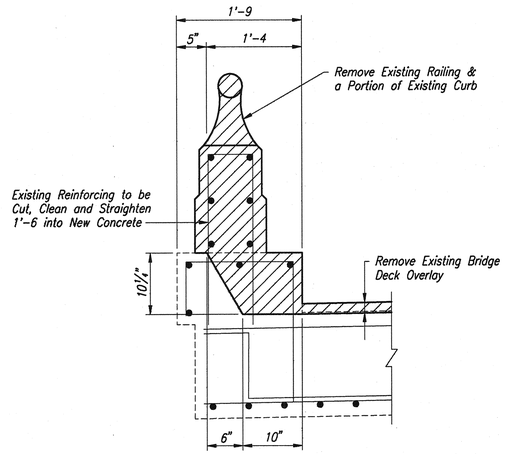

EXISTING SECTION C1–C1
Scale: 1" = 1'-0

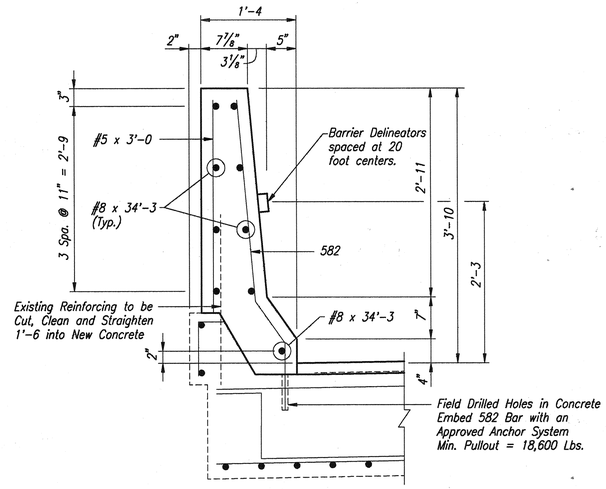

PROPOSED SECTION C1–C1
Scale: 1" = 1'-0

BILL OF MATERIALS CONCRETE RAILING W.B. PHASE I

EPOXY COATED REINFORCING STEEL			
Size or Mark	No. of Bars	Length	Weight (lbs.)
#8	27	34'-3	
		Total #8	2,469 lbs.
582	138	4'-5	
#5	138	3'-0	
		Total #5	1,068 lbs.
Total Epoxy Coated Reinforcing			3,537 lbs.
CONCRETE CLASS "C" IN RAILING			
Concrete Barrier Railing			92 Lft.
MISCELLANEOUS			
Field Drilled Holes in Concrete			138 Each
Barrier Delineators			6 Each

BILL OF MATERIALS CONCRETE RAILING W.B. PHASE II

EPOXY COATED REINFORCING STEEL			
Size or Mark	No. of Bars	Length	Weight (lbs.)
#8	27	34'-3	
		Total #8	2,469 lbs.
582	135	4'-5	
583	3	4'-10	
584	3	5'-0	
#5	135	3'-0	
#5	1	2'-0	
		Total #5	1,077 lbs.
Total Epoxy Coated Reinforcing			3,546 lbs.
CONCRETE CLASS "C" IN SUPERSTRUCTURE			0.2 Cys.
CONCRETE CLASS "C" IN RAILING			
Concrete Barrier Railing			92 Lft.
MISCELLANEOUS			
Field Drilled Holes in Concrete			135 Each
Barrier Delineators			6 Each

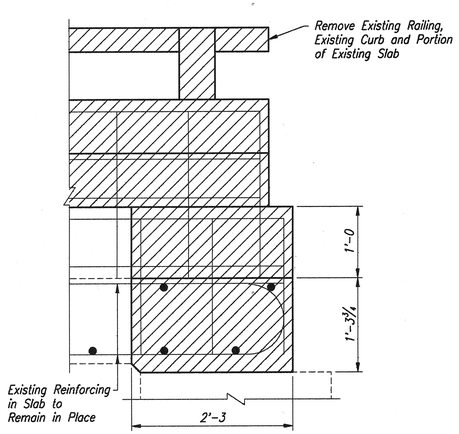

EXISTING SECTION C3–C3
Scale: 1" = 1'-0

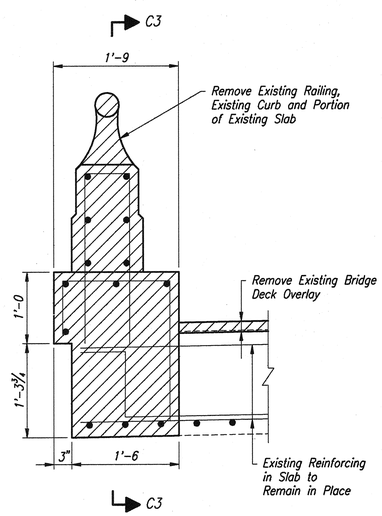

EXISTING SECTION C2–C2
Scale: 1" = 1'-0

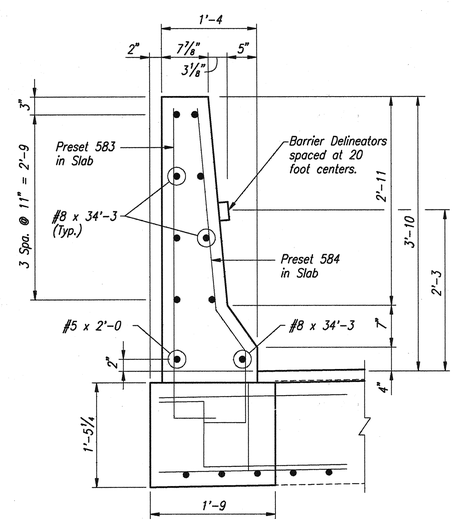

PROPOSED SECTION C2–C2
Scale: 1" = 1'-0

BILL OF MATERIALS CONCRETE RAILING E.B. PHASE I

EPOXY COATED REINFORCING STEEL			
Size or Mark	No. of Bars	Length	Weight (lbs.)
#8	27	34'-3	
		Total #8	2,469 lbs.
582	138	4'-5	
#5	138	3'-0	
		Total #5	1,068 lbs.
Total Epoxy Coated Reinforcing			3,537 lbs.
CONCRETE CLASS "C" IN RAILING			
Concrete Barrier Railing			92 Lft.
MISCELLANEOUS			
Field Drilled Holes in Concrete			138 Each
Barrier Delineators			6 Each

BILL OF MATERIALS CONCRETE RAILING E.B. PHASE II

EPOXY COATED REINFORCING STEEL			
Size or Mark	No. of Bars	Length	Weight (lbs.)
#8	27	34'-3	
		Total #8	2,469 lbs.
582	138	4'-5	
#5	138	3'-0	
		Total #5	1,068 lbs.
Total Epoxy Coated Reinforcing			3,537 lbs.
CONCRETE CLASS "C" IN RAILING			
Concrete Barrier Railing			92 Lft.
MISCELLANEOUS			
Field Drilled Holes in Concrete			138 Each
Barrier Delineators			6 Each

NOTES:
For Reinforcing Bar Notes, see Bridge Standard Sheet C1.

CONCRETE BARRIER RAILING DETAILS

INDIANA DEPARTMENT OF TRANSPORTATION
MONTGOMERY COUNTY

SCALE: As Noted
DATE: October 31, 1995
Jerry D. Ritchie

DRAWING: D6 OF D19 SHEET: 10 OF 49
PROJECT: IM-74-1(118)
BRIDGE CONTRACT NO. B-22242
BRIDGE FILE: I-74-24-4937B

JERRY D. RITCHIE REGISTERED No. 12868 STATE OF INDIANA PROFESSIONAL ENGINEER

94-223-07\GRETCO8\1=48

DESIGNED J.D.R.	CK'D. W.K.S.		
DRAWN W.K.S.	CK'D. J.D.R.		
TRACED	CK'D.		

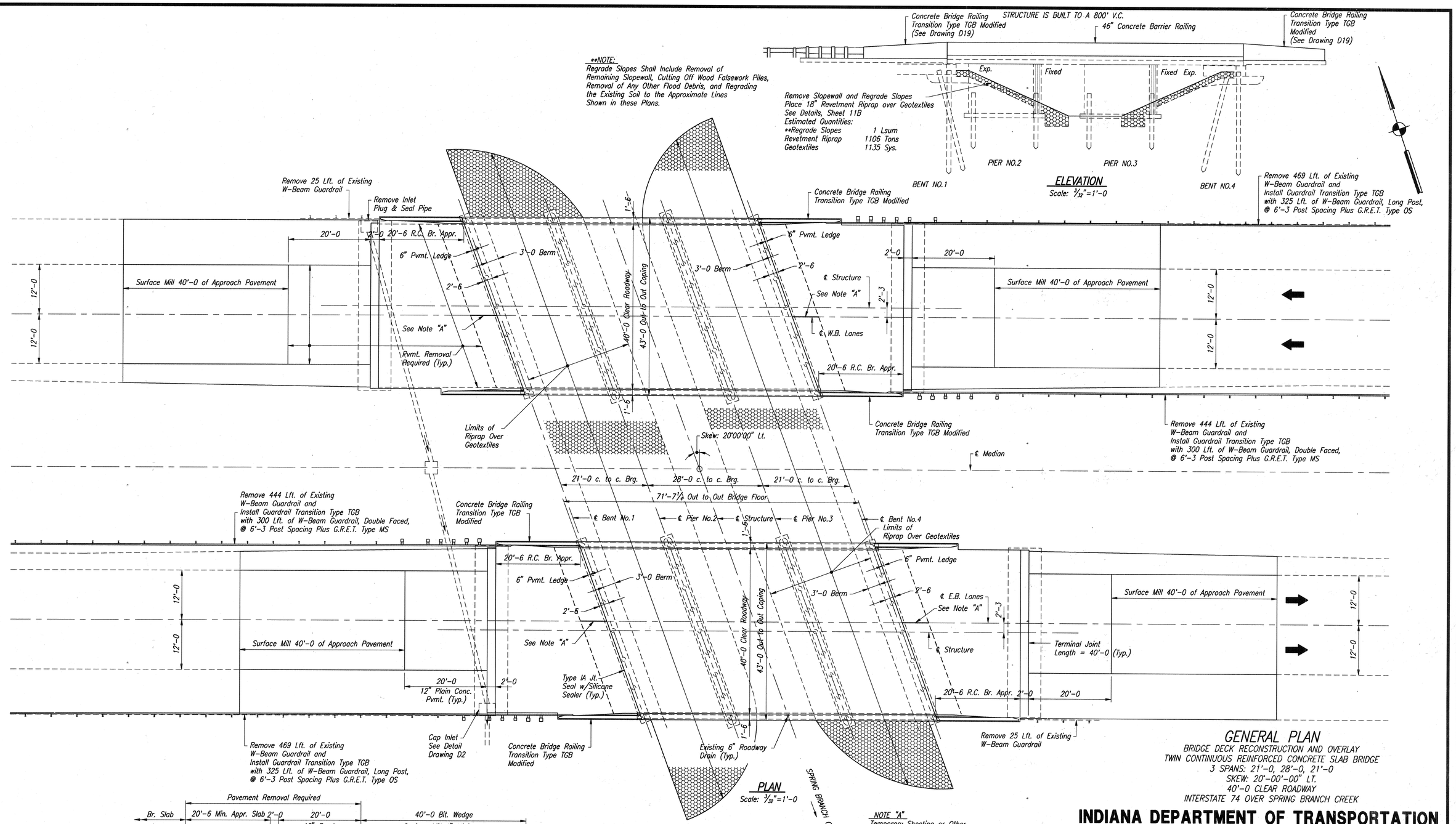

NOTE "A"
Temporary Sheeting or Other Support Method Required Along The ℄ of Lanes to Retain Fill During Phase Construction. Cost to be Included in Cost of Flowable Mortar.

GENERAL PLAN

BRIDGE DECK RECONSTRUCTION AND OVERLAY
TWIN CONTINUOUS REINFORCED CONCRETE SLAB BRIDGE
3 SPANS: 21'-0, 28'-0, 21'-0
SKEW: 20°-00'-00" LT.
40'-0 CLEAR ROADWAY
INTERSTATE 74 OVER SPRING BRANCH CREEK

INDIANA DEPARTMENT OF TRANSPORTATION

MONTGOMERY COUNTY

SCALE: As Noted

DATE: June 10, 1996

Jerry D. Ritchie

JERRY D. RITCHIE REGISTERED No. 12868 STATE OF INDIANA PROFESSIONAL ENGINEER

DRAWING: D7A OF D19 SHEET: 11A OF 49
PROJECT: IM-74-1(118)
BRIDGE CONTRACT NO. B-22242
BRIDGE FILE: I-74-29-4941B

Rev.: 06-12-96; Added A on Drwg. D7

DESIGNED J.D.R. CK'D. W.K.S.
DRAWN W.K.S. CK'D. J.D.R.
TRACED CK'D.

94-223-DBA\OPSBR\1=128

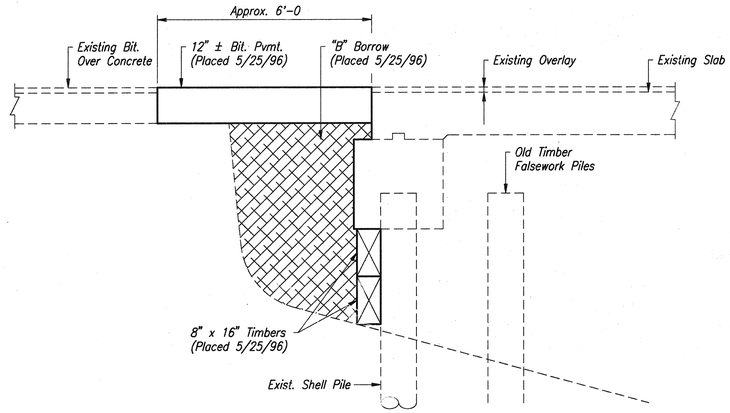

TYPICAL SECTION - END BENT REPAIR
(Showing Existing)
Scale: 1/2"=1'-0

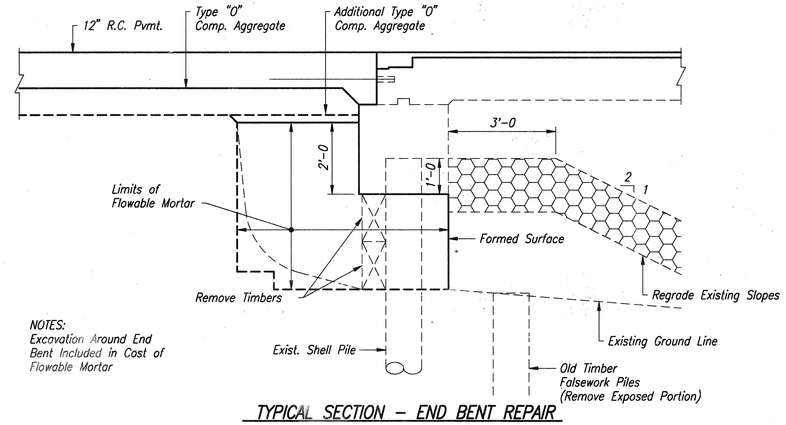

NOTES:
Excavation Around End Bent Included in Cost of Flowable Mortar

TYPICAL SECTION - END BENT REPAIR
(Showing Proposed)
Scale: 1/2"=1'-0

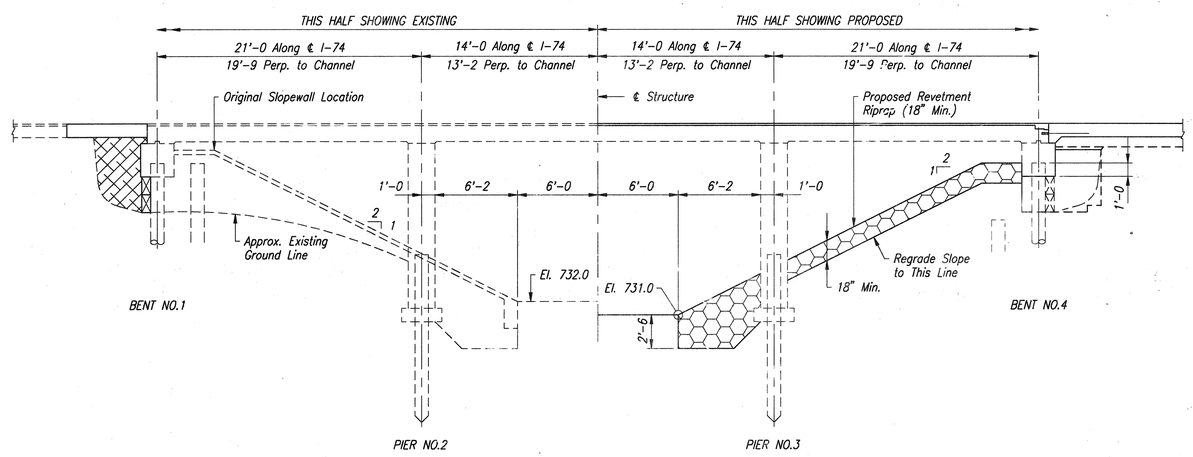

ELEVATION
Scale: 3/16"=1'-0

DETAILS

INDIANA DEPARTMENT OF TRANSPORTATION

MONTGOMERY COUNTY

SCALE: As Noted

DATE: June 10, 1996

Jerry D. Ritchie

DRAWING: D7B OF D19 SHEET: 11B OF 49
PROJECT: IM-74-1(118)
BRIDGE CONTRACT NO. B-22242
BRIDGE FILE: I-74-29-4941B

JERRY D. RITCHIE REGISTERED No. 12868 STATE OF INDIANA PROFESSIONAL ENGINEER

DESIGNED	J.D.R.	CK'D.	W.K.S.
DRAWN	W.K.S.	CK'D.	J.D.R.
TRACED		CK'D.	

94-223-4B41 (PSBC) 1=128

LEGEND

Indicates Removal Items

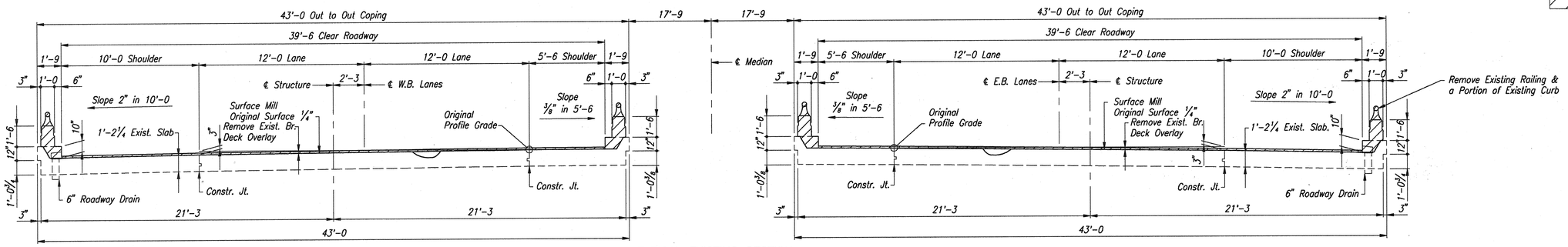

TYPICAL EXISTING SECTION

Scale: 1/4"=1'-0

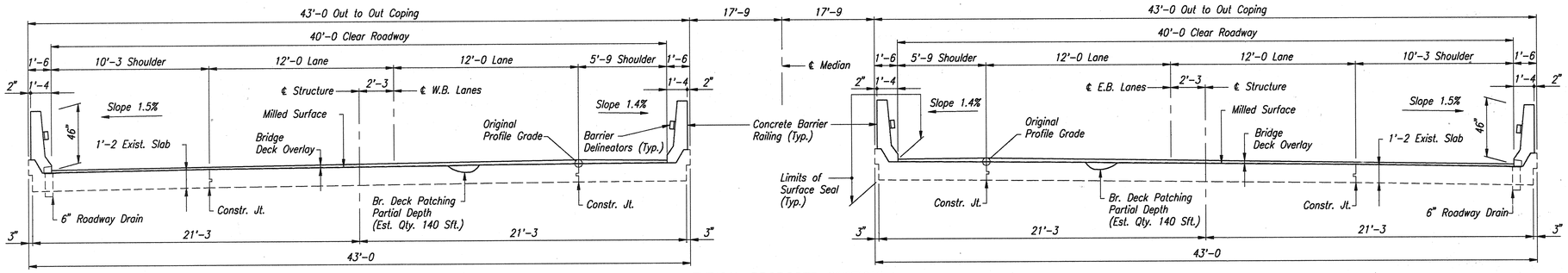

TYPICAL PROPOSED SECTION

Scale: 1/4"=1'-0

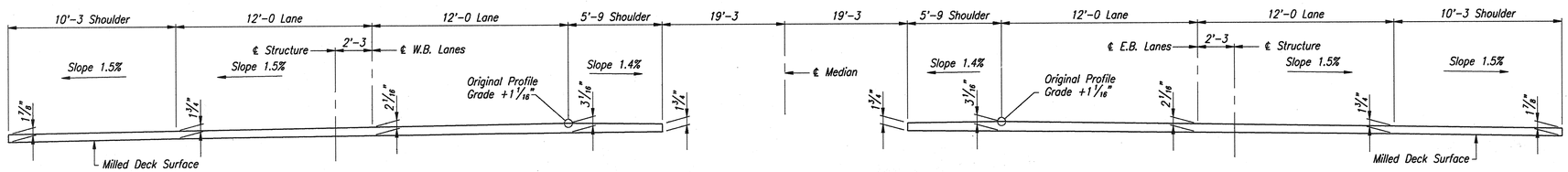

NOTE:
The Bridge Deck Overlay Shall be Placed to the Section Shown Above.
The Extra Overlay Required for the Thicker Sections and the Overlay Dams will be Included in the Pay Item "Additional Bridge Deck Overlay" in Cys.

TYPICAL OVERLAY SECTION

No Scale

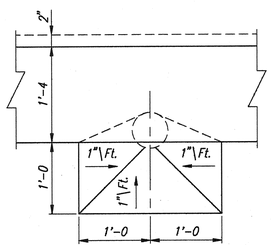

DRAIN PLAN

Scale: 1"=1'-0

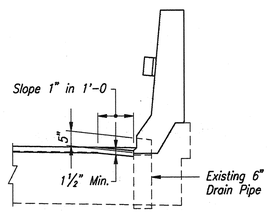

DRAIN DETAIL

Scale: 1/2"=1'-0

GENERAL NOTES

Plans for these structures are on file in the Central Office, INDOT as Bridge File No. I-74-29-4941 and I-74-29-4941A and are available upon request.

Reinforcing steel covering shall be 2" in all parts, unless noted.

Surface Seal railing and outside of coping (Est. Qty. 2,900 Sft.)

For Standard Drawing Index, see Drawing D2

For Material Notes, see Drawing D2

GENERAL PLAN

BRIDGE DECK RECONSTRUCTION AND OVERLAY
TWIN CONTINUOUS REINFORCED CONCRETE SLAB BRIDGE
3 SPANS: 21'-0, 28'-0, 21'-0
SKEW: 20°-00'-00" LT.
40'-0 CLEAR ROADWAY
INTERSTATE 74 OVER SPRING BRANCH CREEK

INDIANA DEPARTMENT OF TRANSPORTATION

MONTGOMERY COUNTY

SCALE: As Noted

DATE: October 31, 1995

Jerry D. Ritchie

JERRY D. RITCHIE REGISTERED No. 12868 STATE OF INDIANA PROFESSIONAL ENGINEER

DRAWING: D8 OF D19 SHEET: 12 OF 49
PROJECT: IM-74-1(118)
BRIDGE CONTRACT NO. B-22242
BRIDGE FILE: I-74-29-4941B

DESIGNED	J.D.R.	ck'd.	W.K.S.
DRAWN	W.K.S.	ck'd.	J.D.R.
TRACED		ck'd.	

94-223-09\(PDSB)1-48

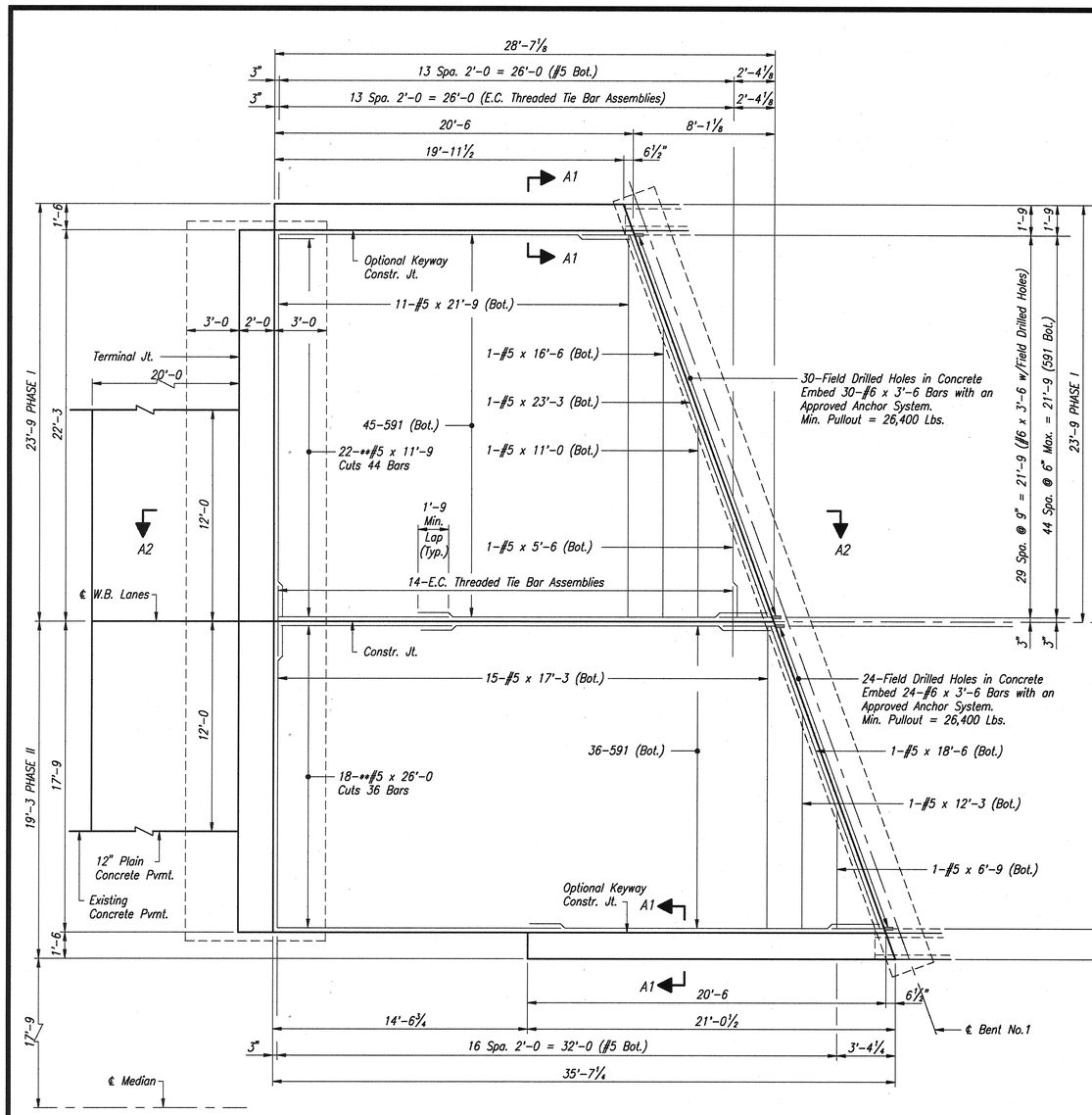

PLAN
(W.B. Bent No.1 Shown, E.B. Bent No.4 Same by 180° Rotation)
Scale: ¼"=1'-0

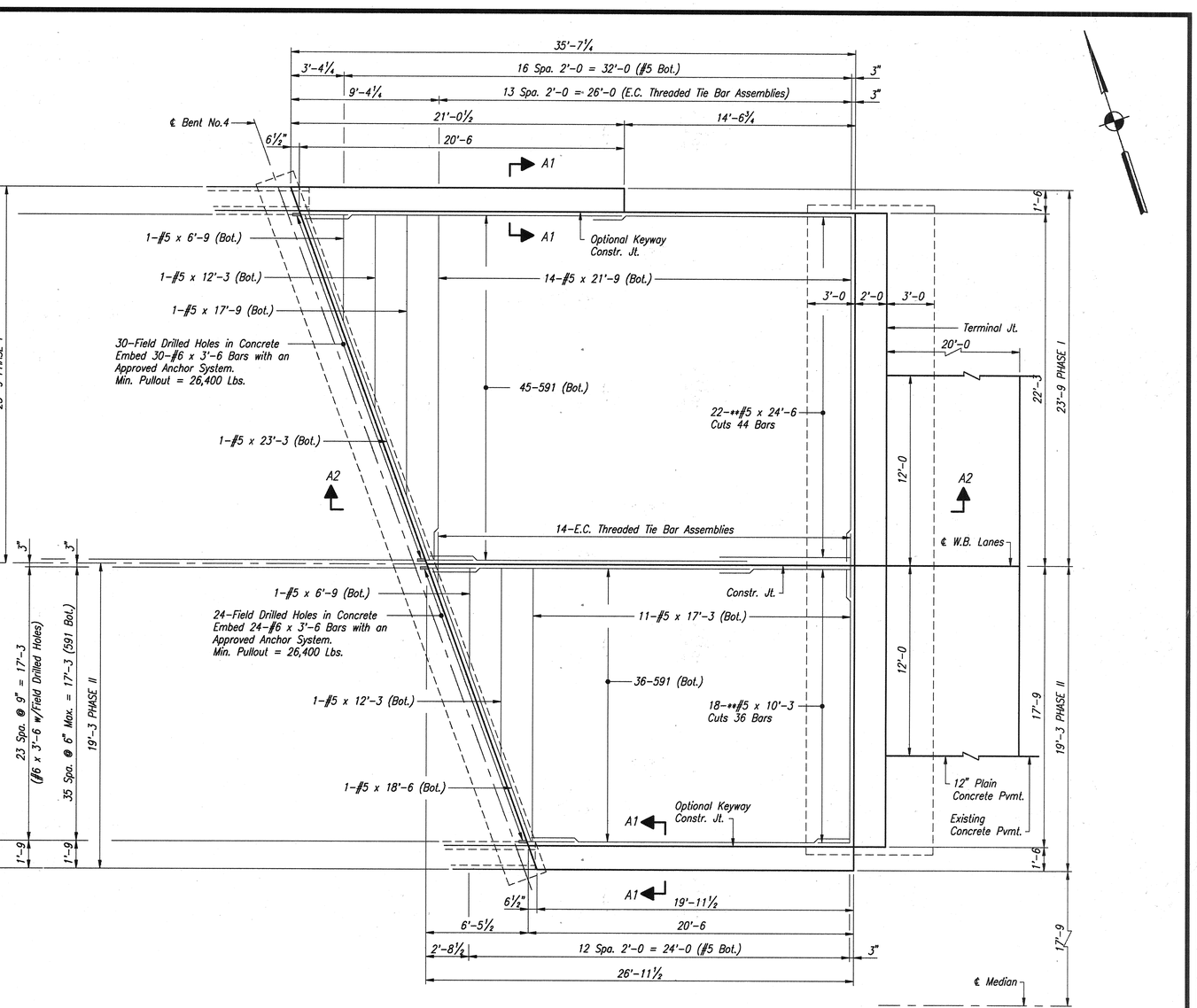

PLAN
(W.B. Bent No.4 Shown, E.B. Bent No.1 Same by 180° Rotation)
Scale: ¼"=1'-0

For Section "A1-A1" and "A2-A2", see Drawing D10

APPROACH SLAB DETAILS

INDIANA DEPARTMENT OF TRANSPORTATION

MONTGOMERY COUNTY

SCALE: As Noted

DATE: October 31, 1995

Jerry D. Ritchie

DRAWING: D9 OF D19 SHEET: 13 OF 49
PROJECT: IM-74-1(118)
BRIDGE CONTRACT NO. B-22242
BRIDGE FILE: I-74-29-4941B

JERRY D. RITCHIE REGISTERED No. 12868 STATE OF INDIANA PROFESSIONAL ENGINEER

94-223-GPA\APPROSBC\1=48

DESIGNED	J.D.R.	CK'D.	W.K.S.
DRAWN	W.K.S.	CK'D.	J.D.R.
TRACED		CK'D.	

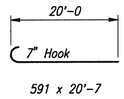

591 x 20'-7

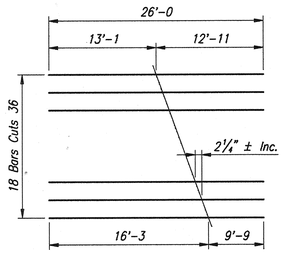

CUTTING DIAGRAM
**#5 x 26'-0

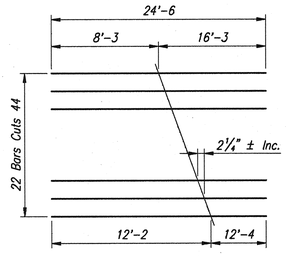

CUTTING DIAGRAM
**#5 x 24'-6

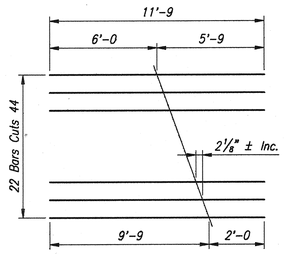

CUTTING DIAGRAM
**#5 x 11'-9

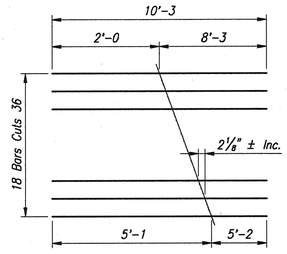

CUTTING DIAGRAM
**#5 x 10'-3

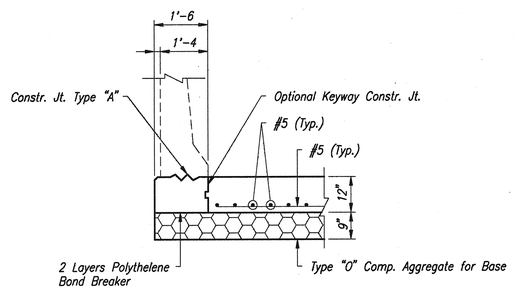

SECTION "A1-A1"
Scale: ½"=1'-0

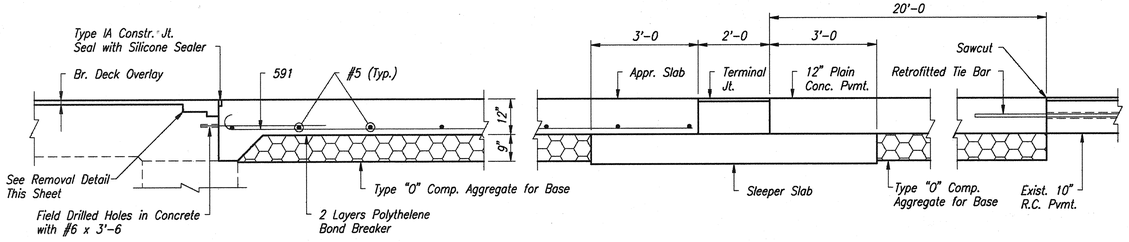

SECTION "A2-A2"
Scale: ½"=1'-0

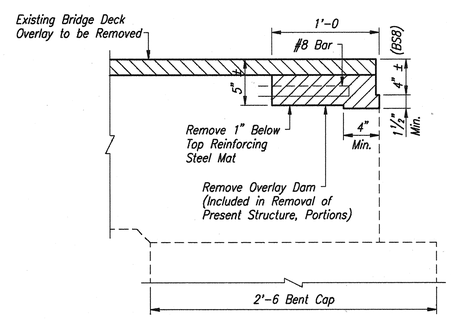

REMOVAL DETAIL - OVERLAY DAM
Scale: 1½"=1'-0

BILL OF MATERIALS
APPROACH SLAB
W.B. PHASE I

EPOXY COATED REINFORCING STEEL

Size or Mark	No. of Bars	Length	Weight (lbs.)
#6	60	3'-6	315 lbs.
591	90	20'-7	
**#5	22	24'-6	
#5	2	23'-3	
#5	25	21'-9	
#5	1	17'-9	
#5	1	16'-6	
#5	1	12'-3	
**#5	22	11'-9	
#5	1	11'-0	
#5	1	6'-9	
#5	1	5'-6	
		Total #5	3,452 lbs.
Total Epoxy Coated Reinforcing			3,767 lbs.
12" R.C. CONCRETE PAVEMENT			
Bent No.1			64.1 Sys.
Bent No.4			81.4 Sys.
Total 12" R.C. Conc. Pavement			145.5 Sys.
12" Plain Conc. Pavement			53.3 Sys.
MISCELLANEOUS			
Type "O" Comp. Aggregate for Base			99 Tons
Field Drilled Holes in Concrete			60 Each
E.C. Threaded Tie Bar Assemblies			28 Each
Terminal Joint			45 Lft.
Retrofitted Tie Bar			24 Each
Concrete Bridge Railing Transition Type TGB, Modified			2 Each

BILL OF MATERIALS
APPROACH SLAB
W.B. PHASE II

EPOXY COATED REINFORCING STEEL

Size or Mark	No. of Bars	Length	Weight (lbs.)
#6	48	3'-6	252 lbs.
591	72	20'-7	
**#5	18	26'-0	
#5	2	18'-6	
#5	26	17'-3	
#5	2	12'-3	
**#5	18	10'-3	
#5	2	6'-9	
		Total #5	2,772 lbs.
Total Epoxy Coated Reinforcing			3,024 lbs.
12" R.C. CONCRETE PAVEMENT			
Bent No.1			62.2 Sys.
Bent No.4			50.2 Sys.
Total 12" R.C. Conc. Pavement			112.4 Sys.
12" Plain Conc. Pavement			53.3 Sys.
MISCELLANEOUS			
Type "O" Comp. Aggregate for Base			83 Tons
Field Drilled Holes in Concrete			48 Each
Terminal Joint			36 Lft.
Retrofitted Tie Bar			24 Each
Concrete Bridge Railing Transition Type TGB, Modified			2 Each

BILL OF MATERIALS
APPROACH SLAB
E.B. PHASE I

EPOXY COATED REINFORCING STEEL

Size or Mark	No. of Bars	Length	Weight (lbs.)
#6	60	3'-6	315 lbs.
591	90	20'-7	
**#5	22	24'-6	
#5	2	23'-3	
#5	25	21'-9	
#5	1	17'-9	
#5	1	16'-6	
#5	1	12'-3	
**#5	22	11'-9	
#5	1	11'-0	
#5	1	6'-9	
#5	1	5'-6	
		Total #5	3,452 lbs.
Total Epoxy Coated Reinforcing			3,767 lbs.
12" R.C. CONCRETE PAVEMENT			
Bent No.1			64.1 Sys.
Bent No.4			81.4 Sys.
Total 12" R.C. Conc. Pavement			145.5 Sys.
12" Plain Conc. Pavement			53.3 Sys.
MISCELLANEOUS			
Type "O" Comp. Aggregate for Base			99 Tons
Field Drilled Holes in Concrete			60 Each
E.C. Threaded Tie Bar Assemblies			28 Each
Terminal Joint			45 Lft.
Retrofitted Tie Bar			24 Each
Concrete Bridge Railing Transition Type TGB, Modified			2 Each

BILL OF MATERIALS
APPROACH SLAB
E.B. PHASE II

EPOXY COATED REINFORCING STEEL

Size or Mark	No. of Bars	Length	Weight (lbs.)
#6	48	3'-6	252 lbs.
591	72	20'-7	
**#5	18	26'-0	
#5	2	18'-6	
#5	26	17'-3	
#5	2	12'-3	
**#5	18	10'-3	
#5	2	6'-9	
		Total #5	2,772 lbs.
Total Epoxy Coated Reinforcing			3,024 lbs.
12" R.C. CONCRETE PAVEMENT			
Bent No.1			62.2 Sys.
Bent No.4			50.2 Sys.
Total 12" R.C. Conc. Pavement			112.4 Sys.
12" Plain Conc. Pavement			53.3 Sys.
MISCELLANEOUS			
Type "O" Comp. Aggregate for Base			83 Tons
Field Drilled Holes in Concrete			48 Each
Terminal Joint			36 Lft.
Retrofitted Tie Bar			24 Each
Concrete Bridge Railing Transition Type TGB, Modified			2 Each

NOTE:
All Reinforcing is to Epoxy Coated
For Reinforcing Bar Notes, see Bridge Standard C1
For Construction Joint Type "A", see Bridge Standard C3
** - Indicates Cutting Diagram Required
For Location of Section "A1-A1" and "A2-A2", see Drawing D9

APPROACH SLAB DETAILS

INDIANA DEPARTMENT OF TRANSPORTATION

MONTGOMERY COUNTY

SCALE: As Noted

DATE: October 31, 1995

Jerry D. Ritchie

JERRY D. RITCHIE REGISTERED No. 12868 STATE OF INDIANA PROFESSIONAL ENGINEER

DRAWING: D10 OF D19 SHEET: 14 OF 49

PROJECT: IM-74-1(118)

BRIDGE CONTRACT NO. B-22242

BRIDGE FILE: I-74-29-4941B

DESIGNED J.D.R. ck'd. W.K.S.
DRAWN W.K.S. ck'd. J.D.R.
TRACED ck'd.

94-221-(89)\APPROACH\1=49

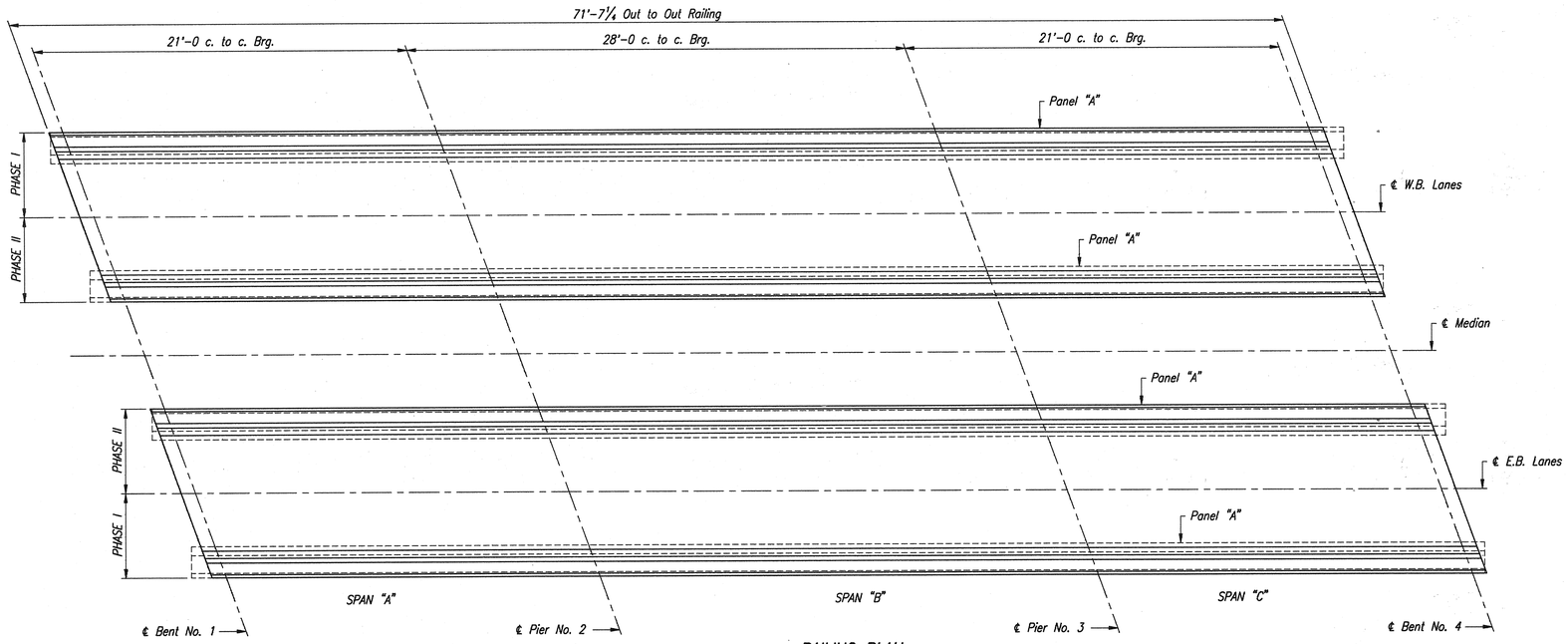

RAILING PLAN

No Scale

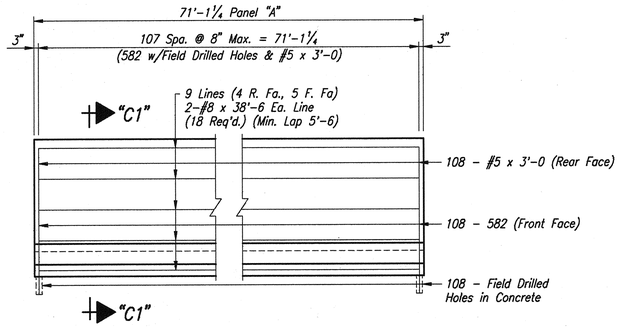

PANEL "A" ELEVATION

Scale: ¼"=1'-0 Horiz.; ½"=1'-0 Vert.

NOTES:

For Reinforcing Bar Notes, see Bridge Standard Sheet C1.
For Section "C1-C1", see Drawing D12

CONCRETE BARRIER RAILING DETAILS

INDIANA DEPARTMENT OF TRANSPORTATION

MONTGOMERY COUNTY

SCALE: As Noted

DATE: October 31, 1995

Jerry D. Ritchie

DRAWING: D11 OF D19 SHEET: 15 OF 49
PROJECT: IM-74-1(118)
BRIDGE CONTRACT NO. B-22242
BRIDGE FILE: I-74-29-4941B

JERRY D. RITCHIE
REGISTERED
No. 12868
STATE OF INDIANA
PROFESSIONAL ENGINEER

DESIGNED J.D.R. C'K'D. W.K.S.
DRAWN W.K.S. C'K'D. J.D.R.
TRACED C'K'D.

94-223-0084 (280580) 1=48

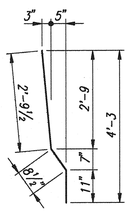

582 x 4'-5

BAR BENDING DETAILS

No Scale

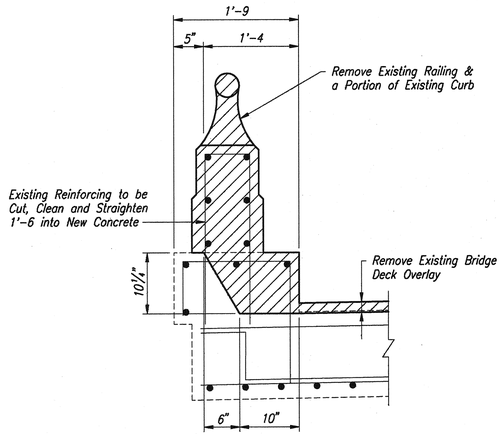

EXISTING SECTION C1-C1

Scale: 1" = 1'-0

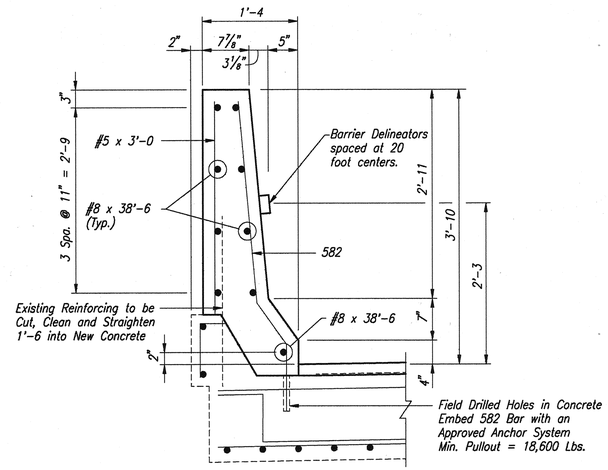

PROPOSED SECTION C1-C1

Scale: 1" = 1'-0

BILL OF MATERIALS CONCRETE RAILING W.B. PHASE I

EPOXY COATED REINFORCING STEEL

Size or Mark	No. of Bars	Length	Weight (lbs.)
#8	18	38'-6	
		Total #8	1,850 lbs.
582	108	4'-5	
#5	108	3'-0	
		Total #5	835 lbs.
Total Epoxy Coated Reinforcing			2,685 lbs.
CONCRETE CLASS "C" IN RAILING			
Concrete Barrier Railing			72 Lft.
MISCELLANEOUS			
Field Drilled Holes in Concrete			108 Each
Barrier Delineators			5 Each

BILL OF MATERIALS CONCRETE RAILING W.B. PHASE II

EPOXY COATED REINFORCING STEEL

Size or Mark	No. of Bars	Length	Weight (lbs.)
#8	18	38'-6	
		Total #8	1,850 lbs.
582	108	4'-5	
#5	108	3'-0	
		Total #5	835 lbs.
Total Epoxy Coated Reinforcing			2,685 lbs.
CONCRETE CLASS "C" IN RAILING			
Concrete Barrier Railing			72 Lft.
MISCELLANEOUS			
Field Drilled Holes in Concrete			108 Each
Barrier Delineators			5 Each

BILL OF MATERIALS CONCRETE RAILING E.B. PHASE I

EPOXY COATED REINFORCING STEEL

Size or Mark	No. of Bars	Length	Weight (lbs.)
#8	18	38'-6	
		Total #8	1,850 lbs.
582	108	4'-5	
#5	108	3'-0	
		Total #5	835 lbs.
Total Epoxy Coated Reinforcing			2,685 lbs.
CONCRETE CLASS "C" IN RAILING			
Concrete Barrier Railing			72 Lft.
MISCELLANEOUS			
Field Drilled Holes in Concrete			108 Each
Barrier Delineators			5 Each

BILL OF MATERIALS CONCRETE RAILING E.B. PHASE II

EPOXY COATED REINFORCING STEEL

Size or Mark	No. of Bars	Length	Weight (lbs.)
#8	18	38'-6	
		Total #8	1,850 lbs.
582	108	4'-5	
#5	108	3'-0	
		Total #5	835 lbs.
Total Epoxy Coated Reinforcing			2,685 lbs.
CONCRETE CLASS "C" IN RAILING			
Concrete Barrier Railing			72 Lft.
MISCELLANEOUS			
Field Drilled Holes in Concrete			108 Each
Barrier Delineators			5 Each

NOTES:

For Reinforcing Bar Notes, see Bridge Standard Sheet C1.
For Location of Section "C1-C1", see Drawing D11

CONCRETE BARRIER RAILING DETAILS

INDIANA DEPARTMENT OF TRANSPORTATION

MONTGOMERY COUNTY

SCALE: As Noted

DATE: October 31, 1995

Jerry D. Ritchie

JERRY D. RITCHIE REGISTERED No. 12868 STATE OF INDIANA PROFESSIONAL ENGINEER

DRAWING: D12 OF D19 SHEET: 16 OF 49
PROJECT: IM-74-1(118)
BRIDGE CONTRACT NO. B-22242
BRIDGE FILE: I-74-29-4941B

DESIGNED J.D.R. CK'D. W.K.S.
DRAWN W.K.S. CK'D. J.D.R.
TRACED CK'D.

94-223-GPA (DESIGN) 1-49

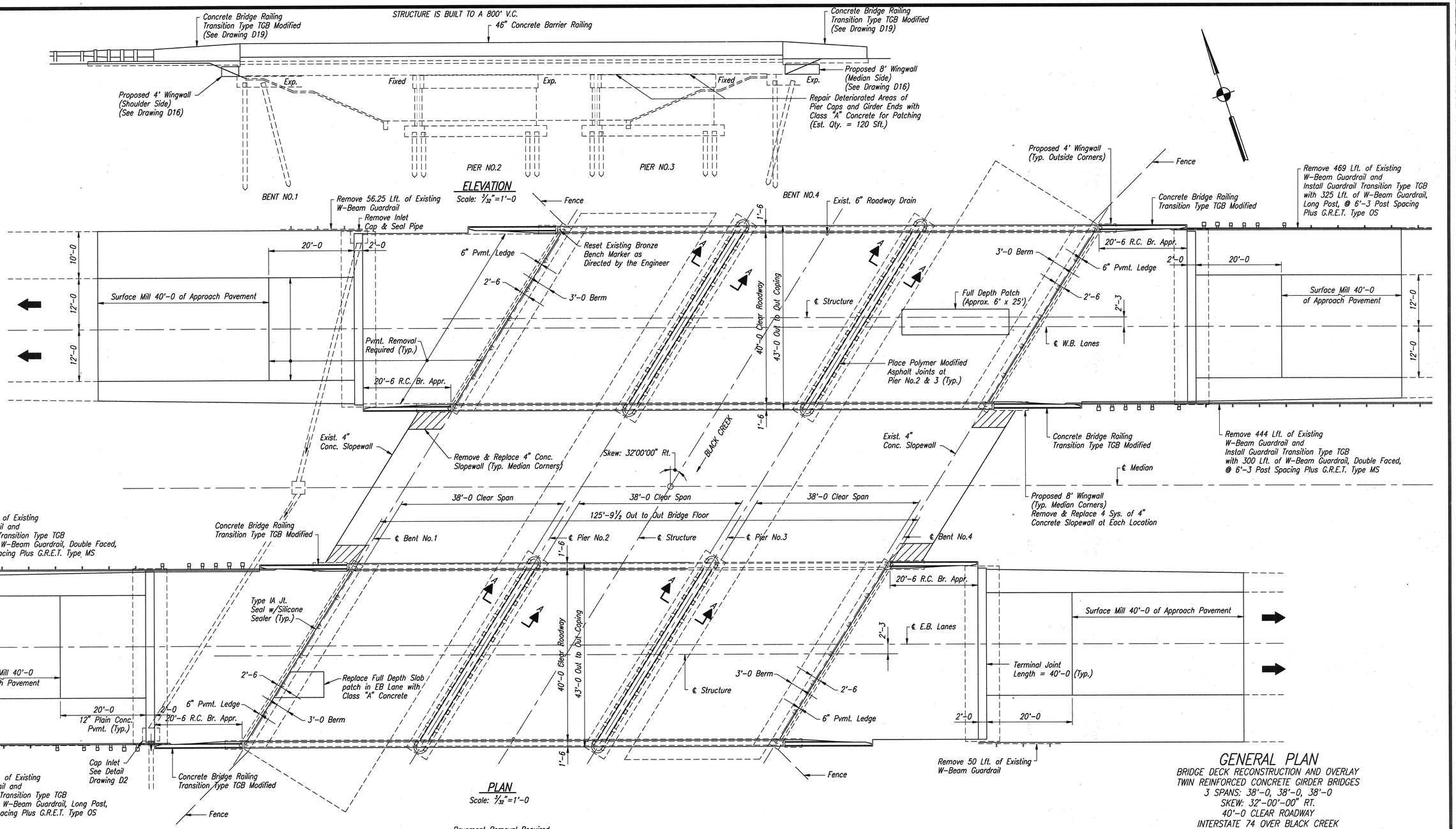

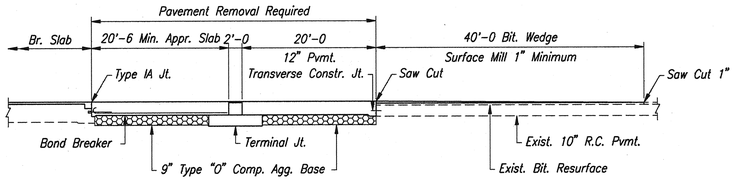

HALF LONGITUDINAL SECTION
No Scale

NOTES
For Section "A-A", see Drawing D14
If a Section of Fence is Removed, a Temporary Fence Shall be Provided to Prevent Livestock From Encroaching on the Highway

GENERAL PLAN

BRIDGE DECK RECONSTRUCTION AND OVERLAY
TWIN REINFORCED CONCRETE GIRDER BRIDGES
3 SPANS: 38'-0, 38'-0, 38'-0
SKEW: 32°-00'-00" RT.
40'-0 CLEAR ROADWAY
INTERSTATE 74 OVER BLACK CREEK

INDIANA DEPARTMENT OF TRANSPORTATION

MONTGOMERY COUNTY

SCALE: As Noted

DATE: October 31, 1995

Jerry D. Ritchie

JERRY D. RITCHIE REGISTERED No. 12868 STATE OF INDIANA PROFESSIONAL ENGINEER

DRAWING: D13 OF D19 SHEET: 17 OF 49
PROJECT: IM-74-1(118)
BRIDGE CONTRACT NO. B-22242
BRIDGE FILE: I-74-30-4942B

DESIGNED	J.D.R.	CK'D.	W.K.S.
DRAWN	W.K.S.	CK'D.	J.D.R.
TRACED		CK'D.	

94-223-10M\CPSC\1=128

LEGEND

Indicates Removal Items

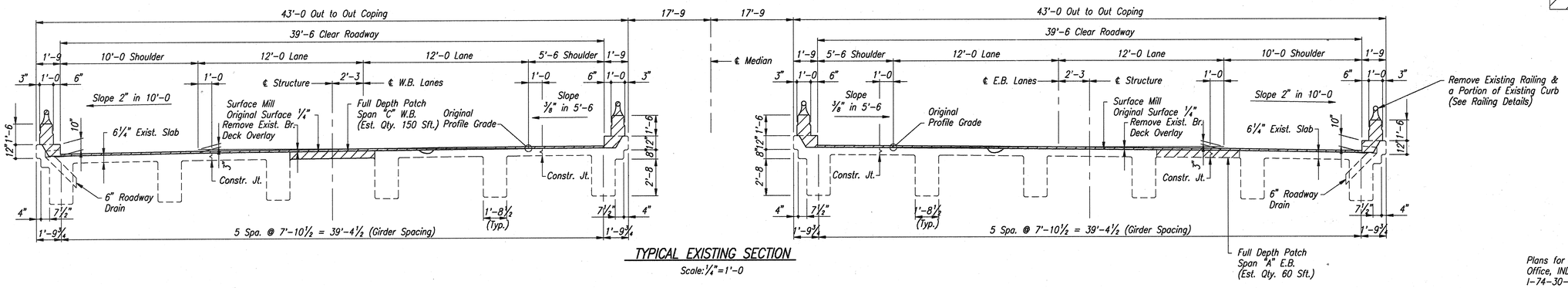

TYPICAL EXISTING SECTION

Scale: 1/4"=1'-0

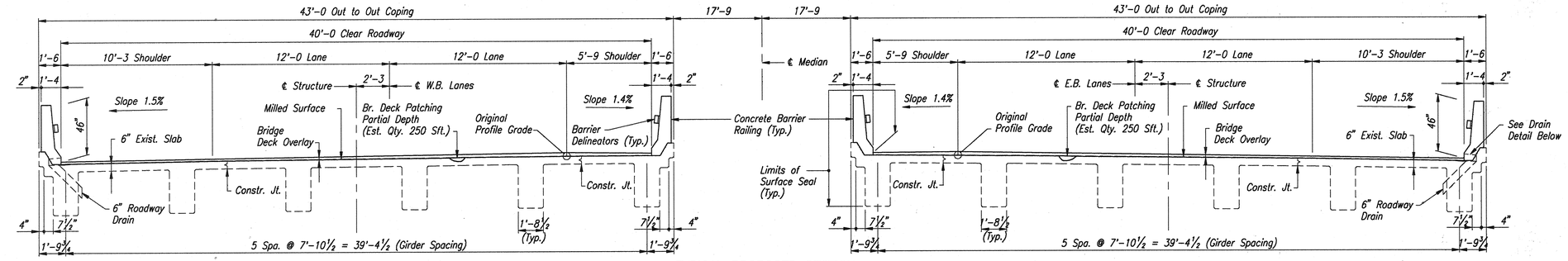

TYPICAL PROPOSED SECTION

Scale: 1/4"=1'-0

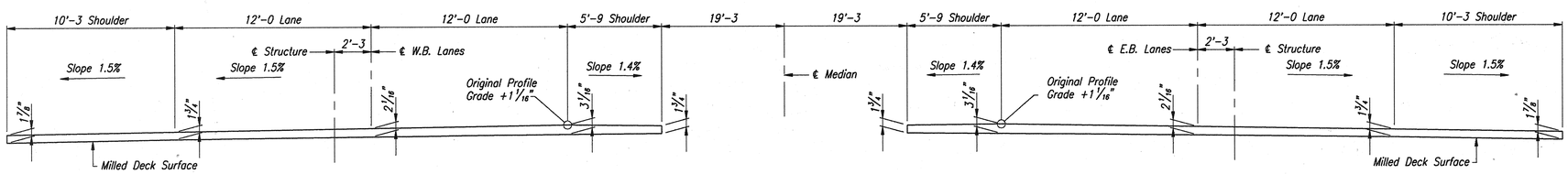

TYPICAL OVERLAY SECTION

No Scale

NOTE:
The Bridge Deck Overlay Shall be Placed to the Section Shown Above.
The Extra Overlay Required for the Thicker Sections and the Overlay Dams will be Included in the Pay Item "Additional Bridge Deck Overlay" in Cys.

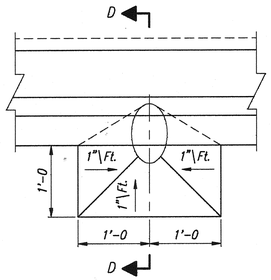

DRAIN PLAN

Scale: 1"=1'-0

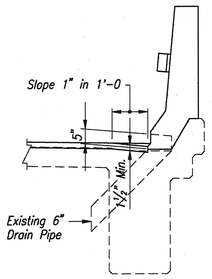

SECTION "D-D"

Scale: 1/2"=1'-0

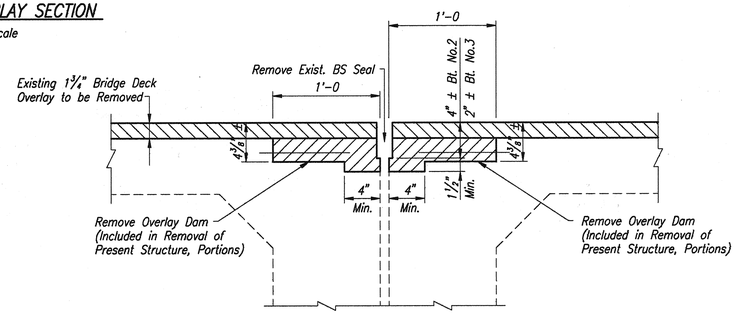

SECTION "A-A"

Showing Removal
Scale: 1 1/2"=1'-0

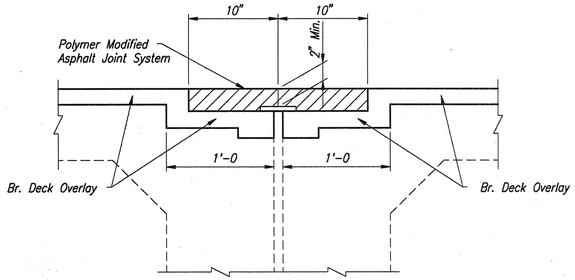

SECTION "A-A"

Showing Proposed
Scale: 1 1/2"=1'-0

GENERAL NOTES

Plans for these structures are on file in the Central Office, INDOT as Bridge File No. I-74-30-4942 and I-74-30-4942A and are available upon request.

Reinforcing steel covering shall be 2" in all parts, unless noted.

For Standard Drawing Index, see Drawing D2

For Material Notes, see Drawing D2

Surface Seal Railing, Coping, and Face of Outside Girder (Est. Qty. = 6,700 Sft.)

For Location of Section "A-A", See Drawing D13

GENERAL PLAN

BRIDGE DECK RECONSTRUCTION AND OVERLAY
TWIN REINFORCED CONCRETE GIRDER BRIDGES
3 SPANS: 38'-0, 38'-0, 38'-0
SKEW: 32°-00'-00" RT.
40'-0 CLEAR ROADWAY
INTERSTATE 74 OVER BLACK CREEK

INDIANA DEPARTMENT OF TRANSPORTATION

MONTGOMERY COUNTY

SCALE: As Noted

DATE: October 31, 1995

Jerry D. Ritchie

JERRY D. RITCHIE REGISTERED No. 12868 STATE OF INDIANA PROFESSIONAL ENGINEER

DRAWING: D14 OF D19 SHEET: 18 OF 49
PROJECT: IM-74-1(118)
BRIDGE CONTRACT NO. B-22242
BRIDGE FILE: I-74-30-4942B

DESIGNED	J.D.R.	CK'D.	W.K.S.
DRAWN	W.K.S.	CK'D.	J.D.R.
TRACED		CK'D.	

94-221-09A (CTRCR) 1=48

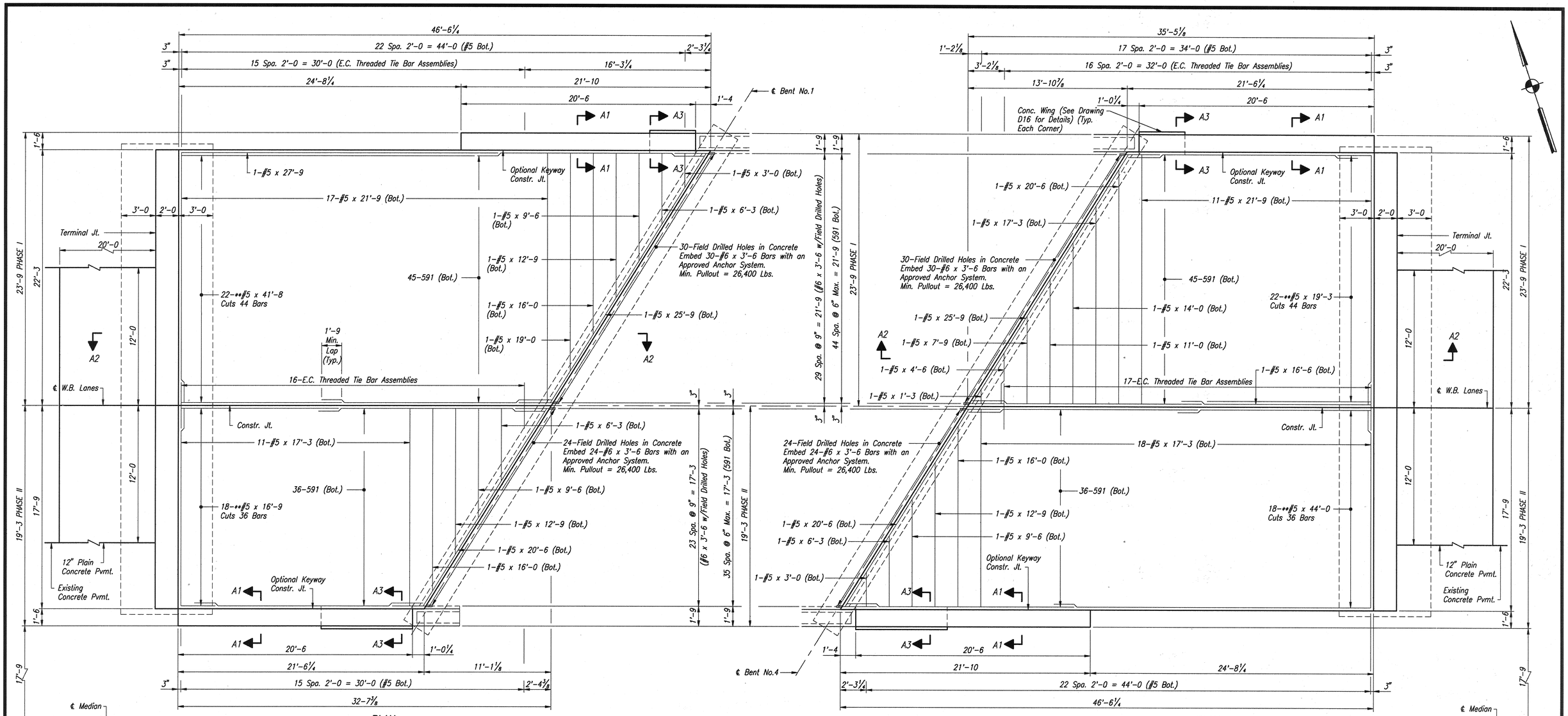

PLAN
(W.B. Bent No.1 Shown, E.B. Bent No.4 Same by 180° Rotation)
Scale: ¼"=1'-0

PLAN
(W.B. Bent No.4 Shown, E.B. Bent No.1 Same by 180° Rotation)
Scale: ¼"=1'-0

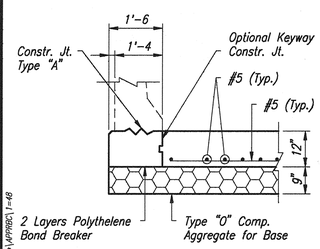

SECTION "A1-A1"
Scale: ½"=1'-0

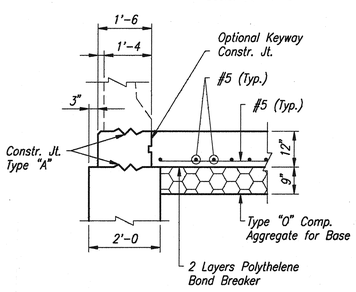

SECTION "A3-A3"
Scale: ½"=1'-0

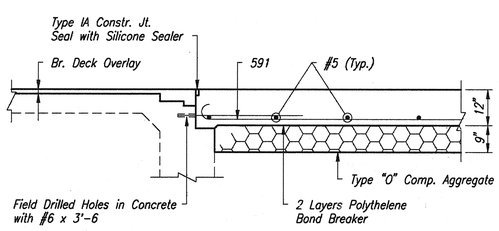

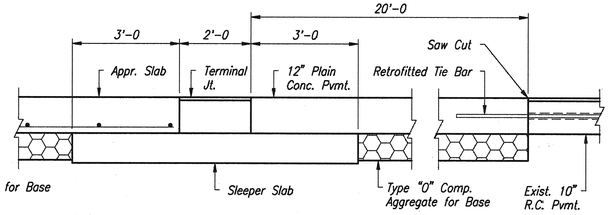

SECTION "A2-A2"
Scale: ½"=1'-0

APPROACH SLAB DETAILS

INDIANA DEPARTMENT OF TRANSPORTATION

MONTGOMERY COUNTY

SCALE: As Noted

DATE: October 31, 1995

Jerry D. Ritchie

DRAWING: D15 OF D19 SHEET: 19 OF 49
PROJECT: IM-74-1(118)
BRIDGE CONTRACT NO. B-22242
BRIDGE FILE: I-74-30-4942B

JERRY D. RITCHIE REGISTERED No. 12868 STATE OF INDIANA PROFESSIONAL ENGINEER

DESIGNED J.D.R. CK'D. W.K.S.
DRAWN W.K.S. CK'D. J.D.R.
TRACED CK'D.

94-223-094\APPROA\1-48

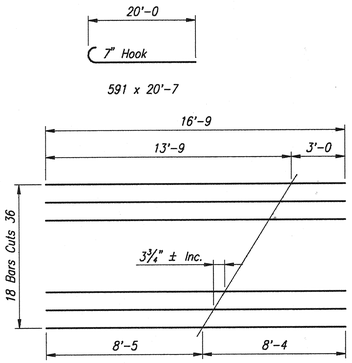

CUTTING DIAGRAM
**#5 x 16'-9

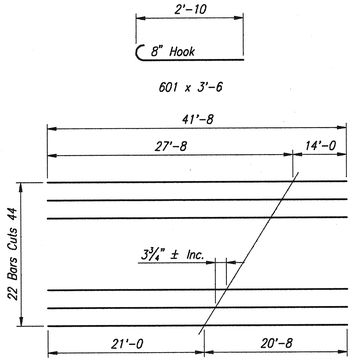

CUTTING DIAGRAM
**#5 x 41'-8

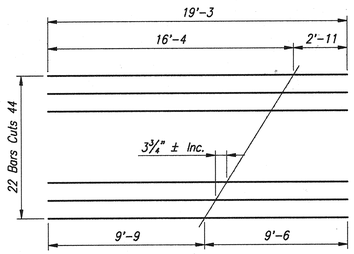

CUTTING DIAGRAM
**#5 x 19'-3

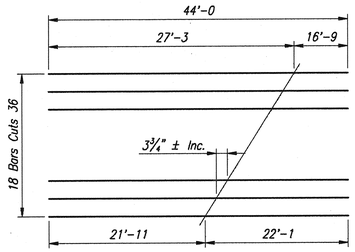

CUTTING DIAGRAM
**#5 x 44'-0

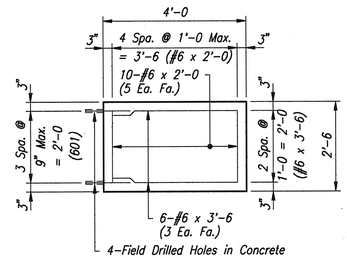

TYP. WING ELEVATION
(Shoulder Side)
Scale: ½"=1'-0

BILL OF MATERIALS APPROACH SLAB W.B. PHASE I

EPOXY COATED REINFORCING STEEL

Size or Mark	No. of Bars	Length	Weight (lbs.)
601	8	3'-6	
#6	72	3'-6	
#6	20	2'-0	
		Total #6	481 lbs.
591	90	20'-7	
**#5	22	41'-8	
#5	1	27'-9	
#5	2	25'-9	
#5	28	21'-9	
#5	1	20'-6	
**#5	22	19'-3	
#5	1	19'-0	
#5	1	17'-3	
#5	1	16'-6	
#5	1	16'-0	
#5	1	14'-0	
#5	1	12'-9	
#5	1	11'-0	
#5	1	9'-6	
#5	1	7'-9	
#5	1	6'-3	
#5	1	4'-6	
#5	1	3'-0	
#5	1	1'-3	
		Total #5	4,214 lbs.
Total Epoxy Coated Reinforcing			4,695 lbs.
12" R.C. CONCRETE PAVEMENT			
Bent No.1			101.2 Sys.
Bent No.4			73.8 Sys.
Total 12" R.C. Conc. Pavement			175.0 Sys.
12" Plain Concrete Pavement			53.3 Sys.
MISCELLANEOUS			
Type "O" Comp. Aggregate for Base			114 Tons
Field Drilled Holes in Concrete			68 Each
E.C. Threaded Tie Bar Assemblies			33 Each
Terminal Jt.			45 Lft.
Conc. Class "A" in Substructure			1.5 Cys.
Retrofitted Tie Bar			24 Each
Concrete Bridge Railing Transition Type TGB, Modified			2 Each

BILL OF MATERIALS APPROACH SLAB W.B. PHASE II

EPOXY COATED REINFORCING STEEL

Size or Mark	No. of Bars	Length	Weight (lbs.)
601	8	3'-6	
#6	12	7'-6	
#6	48	3'-6	
#6	36	2'-0	
		Total #6	538 lbs.
591	72	20'-7	
**#5	18	44'-0	
#5	2	20'-6	
#5	29	17'-3	
**#5	18	16'-9	
#5	2	16'-0	
#5	2	12'-9	
#5	2	9'-6	
#5	2	6'-3	
#5	1	3'-0	
		Total #5	3,347 lbs.
Total Epoxy Coated Reinforcing			3,885 lbs.
12" R.C. CONCRETE PAVEMENT			
Bent No.1			56.8 Sys.
Bent No.4			84.2 Sys.
Total 12" R.C. Conc. Pavement			141.0 Sys.
12" Plain Concrete Pavement			53.3 Sys.
MISCELLANEOUS			
Type "O" Comp. Aggregate for Base			97 Tons
Field Drilled Holes in Concrete			56 Each
Terminal Jt.			36 Lft.
Conc. Class "A" in Substructure			3.0 Cys.
Retrofitted Tie Bar			24 Each
Concrete Bridge Railing Transition Type TGB, Modified			2 Each

BILL OF MATERIALS APPROACH SLAB E.B. PHASE I

EPOXY COATED REINFORCING STEEL

Size or Mark	No. of Bars	Length	Weight (lbs.)
601	8	3'-6	
#6	72	3'-6	
#6	20	2'-0	
		Total #6	481 lbs.
591	90	20'-7	
**#5	22	41'-8	
#5	1	27'-9	
#5	2	25'-9	
#5	28	21'-9	
#5	1	20'-6	
**#5	22	19'-3	
#5	1	19'-0	
#5	1	17'-3	
#5	1	16'-6	
#5	1	16'-0	
#5	1	14'-0	
#5	1	12'-9	
#5	1	11'-0	
#5	1	9'-6	
#5	1	7'-9	
#5	1	6'-3	
#5	1	4'-6	
#5	1	3'-0	
#5	1	1'-3	
		Total #5	4,214 lbs.
Total Epoxy Coated Reinforcing			4,695 lbs.
12" R.C. CONCRETE PAVEMENT			
Bent No.1			101.2 Sys.
Bent No.4			73.8 Sys.
Total 12" R.C. Conc. Pavement			175.0 Sys.
12" Plain Concrete Pavement			53.3 Sys.
MISCELLANEOUS			
Type "O" Comp. Aggregate for Base			114 Tons
Field Drilled Holes in Concrete			68 Each
E.C. Threaded Tie Bar Assemblies			33 Each
Terminal Jt.			45 Lft.
Conc. Class "A" in Substructure			1.5 Cys.
Retrofitted Tie Bar			24 Each
Concrete Bridge Railing Transition Type TGB, Modified			2 Each

BILL OF MATERIALS APPROACH SLAB E.B. PHASE II

EPOXY COATED REINFORCING STEEL

Size or Mark	No. of Bars	Length	Weight (lbs.)
601	8	3'-6	
#6	12	7'-6	
#6	48	3'-6	
#6	36	2'-0	
		Total #6	538 lbs.
591	72	20'-7	
**#5	18	44'-0	
#5	2	20'-6	
#5	29	17'-3	
**#5	18	16'-9	
#5	2	16'-0	
#5	2	12'-9	
#5	2	9'-6	
#5	2	6'-3	
#5	1	3'-0	
		Total #5	3,347 lbs.
Total Epoxy Coated Reinforcing			3,885 lbs.
12" R.C. CONCRETE PAVEMENT			
Bent No.1			56.8 Sys.
Bent No.4			84.2 Sys.
Total 12" R.C. Conc. Pavement			141.0 Sys.
12" Plain Concrete Pavement			53.3 Sys.
MISCELLANEOUS			
Type "O" Comp. Aggregate for Base			97 Tons
Field Drilled Holes in Concrete			56 Each
Terminal Jt.			36 Lft.
Conc. Class "A" in Substructure			3.0 Cys.
Retrofitted Tie Bar			24 Each
Concrete Bridge Railing Transition Type TGB, Modified			2 Each

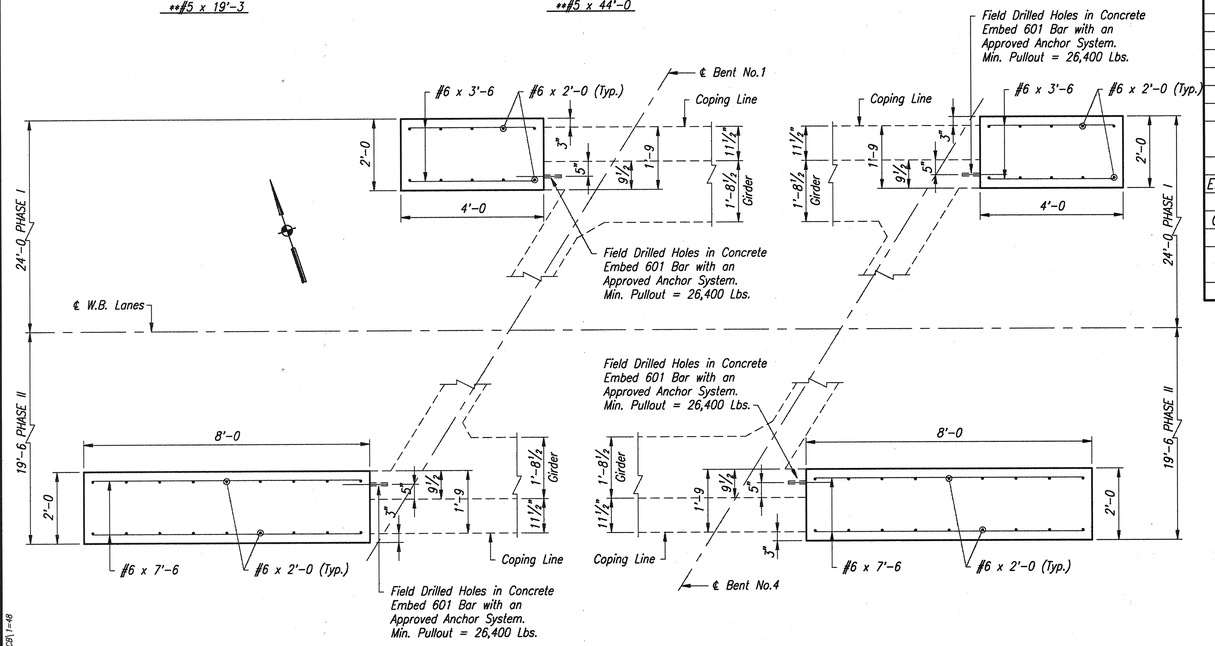

WING PLAN
(W.B. Bent No.1 Shown, E.B. Bent No.4 Same by 180° Rotation)
Scale: ½"=1'-0

WING PLAN
(W.B. Bent No.4 Shown, E.B. Bent No.1 Same by 180° Rotation)
Scale: ½"=1'-0

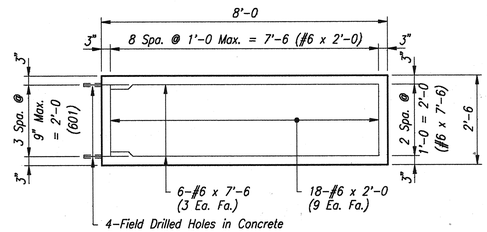

TYP. WING ELEVATION
(Median Side)
Scale: ½"=1'-0

NOTE:
All Reinforcing is to Epoxy Coated
For Reinforcing Bar Notes, see Bridge Standard C1
For Construction Joint Type "A", see Bridge Standard C3
** - Indicates Cutting Diagram Required

APPROACH SLAB DETAILS

INDIANA DEPARTMENT OF TRANSPORTATION

MONTGOMERY COUNTY

SCALE: As Noted

DATE: October 31, 1995

Jerry D. Ritchie

JERRY D. RITCHIE REGISTERED No. 12868 STATE OF INDIANA PROFESSIONAL ENGINEER

DRAWING: D16 OF D19 SHEET: 20 OF 49

PROJECT: IM-74-1(118)

BRIDGE CONTRACT NO. B-22242

BRIDGE FILE: I-74-30-4942B

94-223-09\APPR(B)\1=48

DESIGNED	J.D.R.	ck'D.	W.K.S.
DRAWN	W.K.S.	ck'D.	J.D.R.
TRACED		ck'D.	

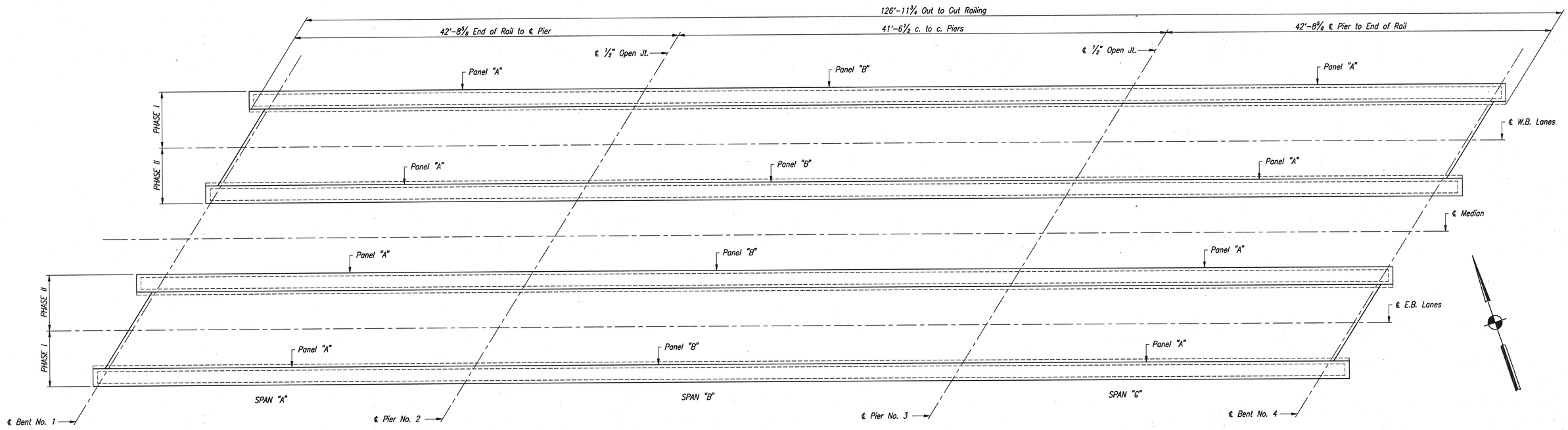

RAILING PLAN

No Scale

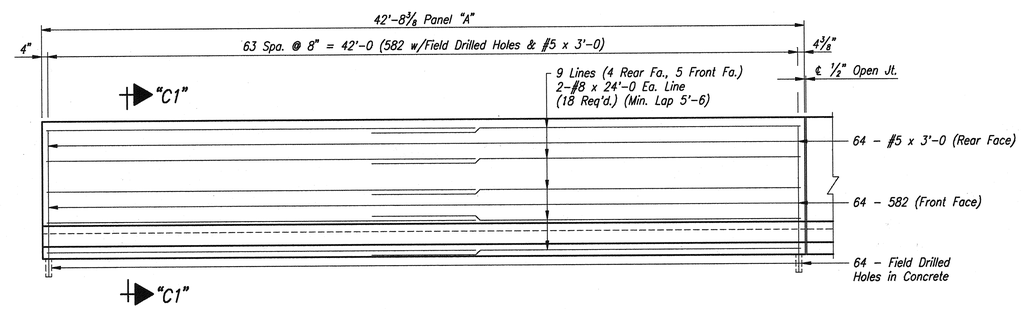

PANEL "A" ELEVATION

Scale: ¼"=1'-0 Horiz.; ½"=1'-0 Vert.

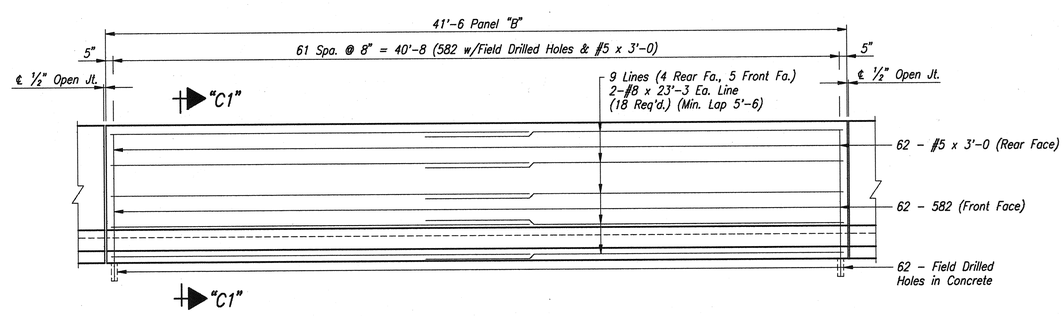

PANEL "B" ELEVATION

Scale: ¼"=1'-0 Horiz.; ½"=1'-0 Vert.

NOTES:
For Reinforcing Bar Notes, see Bridge Standard Sheet C1.
For Section "C1-C1", see Drawing D18

CONCRETE BARRIER RAILING DETAILS

INDIANA DEPARTMENT OF TRANSPORTATION

MONTGOMERY COUNTY

SCALE: As Noted

DATE: October 31, 1995

Jerry D. Ritchie

JERRY D. RITCHIE REGISTERED No. 12868 STATE OF INDIANA PROFESSIONAL ENGINEER

DRAWING: D17 OF D19 SHEET: 21 OF 49
PROJECT: IM-74-1(118)
BRIDGE CONTRACT NO. B-22242
BRIDGE FILE: I-74-30-4942B

DESIGNED	J.D.R.	CK'D.	W.K.S.
DRAWN	W.K.S.	CK'D.	J.D.R.
TRACED		CK'D.	

94-223-09\(BRIDGE)1-48

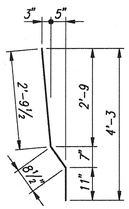

582 x 4'-5

BAR BENDING DETAILS

No Scale

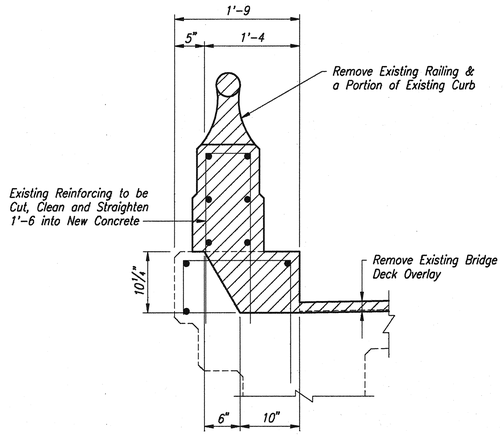

EXISTING SECTION C1-C1

Scale: 1" = 1'-0

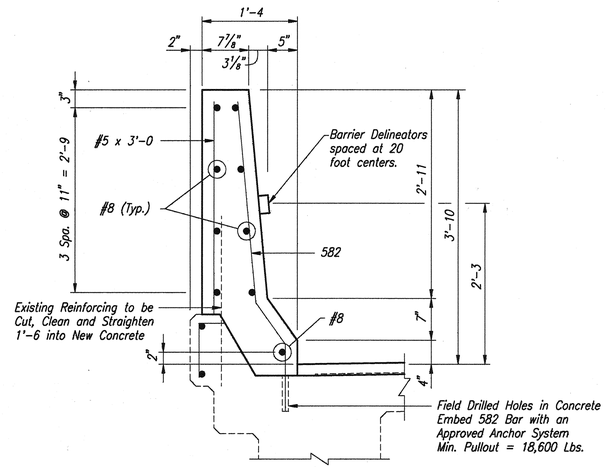

PROPOSED SECTION C1-C1

Scale: 1" = 1'-0

BILL OF MATERIALS CONCRETE RAILING W.B. PHASE I

EPOXY COATED REINFORCING STEEL

Size or Mark	No. of Bars	Length	Weight (lbs.)
#8	36	24'-0	
#8	18	23'-3	
		Total #8	3,424 lbs.
582	190	4'-5	
#5	190	3'-0	
		Total #5	1,470 lbs.
Total Epoxy Coated Reinforcing			4,894 lbs.
CONCRETE CLASS "C" IN RAILING			
Concrete Barrier Railing			127 Lft.
MISCELLANEOUS			
Field Drilled Holes in Concrete			190 Each
Barrier Delineators			8 Each

BILL OF MATERIALS CONCRETE RAILING W.B. PHASE II

EPOXY COATED REINFORCING STEEL

Size or Mark	No. of Bars	Length	Weight (lbs.)
#8	36	24'-0	
#8	18	23'-3	
		Total #8	3,424 lbs.
582	190	4'-5	
#5	190	3'-0	
		Total #5	1,470 lbs.
Total Epoxy Coated Reinforcing			4,894 lbs.
CONCRETE CLASS "C" IN RAILING			
Concrete Barrier Railing			127 Lft.
MISCELLANEOUS			
Field Drilled Holes in Concrete			190 Each
Barrier Delineators			8 Each

BILL OF MATERIALS CONCRETE RAILING E.B. PHASE I

EPOXY COATED REINFORCING STEEL

Size or Mark	No. of Bars	Length	Weight (lbs.)
#8	36	24'-0	
#8	18	23'-3	
		Total #8	3,424 lbs.
582	190	4'-5	
#5	190	3'-0	
		Total #5	1,470 lbs.
Total Epoxy Coated Reinforcing			4,894 lbs.
CONCRETE CLASS "C" IN RAILING			
Concrete Barrier Railing			127 Lft.
MISCELLANEOUS			
Field Drilled Holes in Concrete			190 Each
Barrier Delineators			8 Each

BILL OF MATERIALS CONCRETE RAILING E.B. PHASE II

EPOXY COATED REINFORCING STEEL

Size or Mark	No. of Bars	Length	Weight (lbs.)
#8	36	24'-0	
#8	18	23'-3	
		Total #8	3,424 lbs.
582	190	4'-5	
#5	190	3'-0	
		Total #5	1,470 lbs.
Total Epoxy Coated Reinforcing			4,894 lbs.
CONCRETE CLASS "C" IN RAILING			
Concrete Barrier Railing			127 Lft.
MISCELLANEOUS			
Field Drilled Holes in Concrete			190 Each
Barrier Delineators			8 Each

NOTES:

For Reinforcing Bar Notes, see Bridge Standard Sheet C1.

CONCRETE BARRIER RAILING DETAILS

INDIANA DEPARTMENT OF TRANSPORTATION

MONTGOMERY COUNTY

SCALE: As Noted

DATE: October 31, 1995

Jerry D. Ritchie

JERRY D. RITCHIE REGISTERED No. 12868 STATE OF INDIANA PROFESSIONAL ENGINEER

DRAWING: D18 OF D19 SHEET: 22 OF 49

PROJECT: IM-74-1(118)

BRIDGE CONTRACT NO. B-22242

BRIDGE FILE: I-74-30-4942B

DESIGNED J.D.R. ck'd. W.K.S.

DRAWN W.K.S. ck'd. J.D.R.

TRACED ck'd.

94-223-094 (20180CB) 1=48

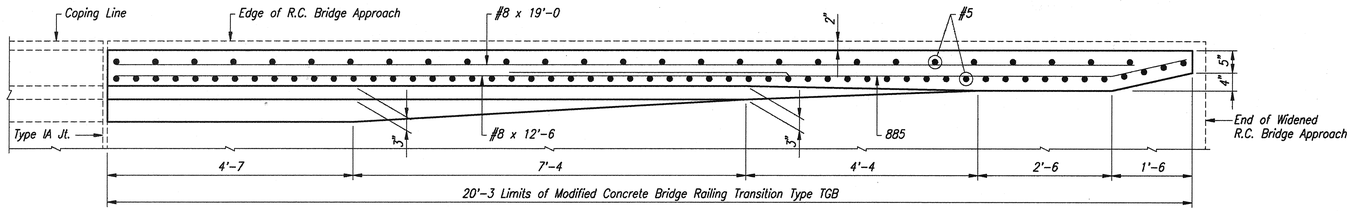

PLAN
Scale: 3/4"=1'-0

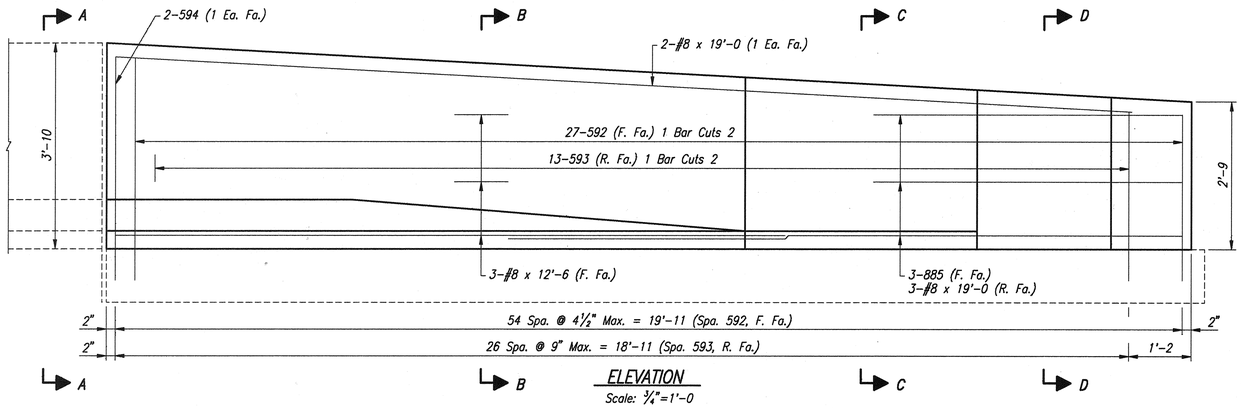

ELEVATION
Scale: 3/4"=1'-0

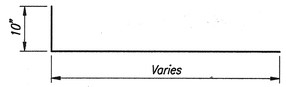

Bending Diagram

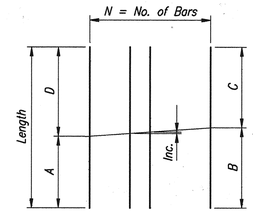

Cutting Diagram
(1 Bar Cuts 2)

Mark	Length	A	B	C	D	N	Inc.
592	9'-0	4'-0	4'-5 7/8	4'-6 1/8	5'-0	27	1/8" ±
593	9'-0	4'-0	4'-5 7/8	4'-6 3/8	5'-0	13	1/2" ±

BILL OF MATERIALS
RAILING TRANSITION

EPOXY COATED REINFORCING STEEL			
Size or Mark	No. of Bars	Length	Weight (lbs.)
885	3	12'-8	
#8	5	19'-0	
#8	3	12'-6	
		Total #8	455
592	27	9'-0	
593	13	9'-0	
594	2	5'-0	
		Total #5	386
Total Epoxy Coated Reinforcing			841
MISCELLANEOUS			
Class "C" Concrete			2.2 Cys.
Surface Seal			150 Sft.

NOTE:
These Quantities are for One Concrete Bridge Railing Transition Type TGB, Modified.

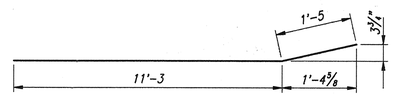

885 x 12'-8

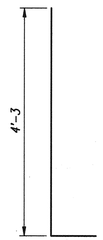

594 x 5'-0

Min. Bar Lap	
#5	2'-0
#8	5'-2

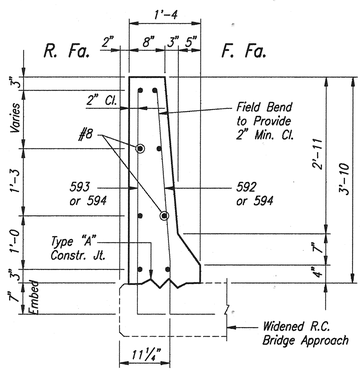

SECTION "A-A"
Scale: 3/4"=1'-0

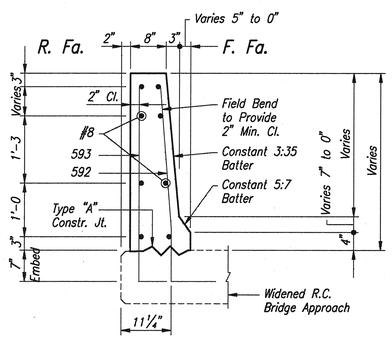

SECTION "B-B"
Scale: 3/4"=1'-0

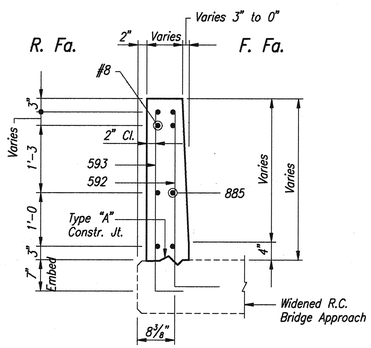

SECTION "C-C"
Scale: 3/4"=1'-0

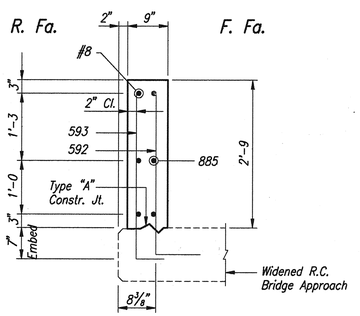

SECTION "D-D"
Scale: 3/4"=1'-0

NOTES:
All Reinforcing Steel to be Epoxy Coated.

For Reinforcing Bar Notes, See Bridge Standard C1.

Quantities Shown for Information Only. Cost Shall be Included in the Pay Item "Concrete Bridge Railing Transition Type TGB, Modified", Each.

CONCRETE BRIDGE RAILING
TRANSITION TYPE TGB, MODIFIED

INDIANA DEPARTMENT OF TRANSPORTATION

MONTGOMERY COUNTY

SCALE: As Noted

DATE: October 31, 1995

Jerry D. Ritchie

JERRY D. RITCHIE REGISTERED No. 12868 STATE OF INDIANA PROFESSIONAL ENGINEER

DRAWING: D19 OF D19 SHEET: 23 OF 49
PROJECT: IM-74-1(118)
BRIDGE CONTRACT NO. B-22242
BRIDGE FILE: I-74-30-4942B

DESIGNED	J.D.R.	ck'd.	W.K.S.
DRAWN	W.K.S.	ck'd.	J.D.R.
TRACED		ck'd.	

94-223-004\STD2M\1-16

STRUCTURE QUANTITIES

BRIDGE FILE	ITEM	CONCRETE CLASS C SUPERSTR CU. YDS.	CONCRETE CLASS A SUBSTR CU. YDS.	CONCRETE CLASS B ABOVE FOOTING CU. YDS.	CONCRETE CLASS B IN FOOTING CU. YDS.			CONCRETE RAILING CLASS C CU. YDS.	CONCRETE RAILING CLASS C LIN. FT.	REINF. STEEL TOTAL LBS.	STRUCT. STEEL *** LBS.	EPOXY COATED REINF. STEEL LBS.	ANCHOR PLATES MK-AP1 EACH	PILES EPOXY COATED SHELLS NO.	PILES EPOXY COATED SHELLS LIN. FT.	PILES TREATED TIMBER NO.	PILES TREATED TIMBER LIN. FT.	PILES STEEL ENCASED CONC. NO.	PILES STEEL ENCASED CONC. LIN. FT.	PILES STEEL H BEARING NO.	PILES STEEL H BEARING LIN. FT.	6" ø PVC DRAIN PIPE LIN. FT.	CAST IRON GRATES, BASINS, & FITTINGS LBS.	CONC. PVMT. REINF. 12 INCH SYS.	12" PLAIN CONCRETE PAVEMENT SYS.	6" ø PERF. C.P. PIPE LIN. FT.	CONC. STR. MEMBERS BOX BEAMS TYPE SQ. FT.	CONC. STR. MEMBERS I-BEAM TYPE LIN. FT.	CONC. RAIL. TRANSITION, TYPE TGB MODIFIED EACH	TYPE "O" COMP. AGG. FOR BASE TON	B-BORROW FOR STR. BACKFILL CU. YDS.	FIELD DRILLED HOLES IN CONCRETE EACH	BARRIER DELINEATORS EACH	RETROFITTED TIE BAR EACH	EPOXY COATED THREADED TIE BAR ASSEMBLIES EACH	TERMINAL JOINT LIN. FT.
I-74-24-4937B	W.B. APPROACH SLAB PHASE I											3,767												145.5	53.3				2	99		60		24	28	45
	W.B. APPROACH SLAB PHASE II											3,024												112.4	53.3				2	83		48		24		36
	E.B. APPROACH SLAB PHASE I											3,767												145.5	53.3				2	99		60		24	28	45
	E.B. APPROACH SLAB PHASE II											3,024												112.4	53.3				2	83		48		24		36
	W.B. CONC. BARRIER RAIL. PHASE I								92			3,537																				138	6			
	W.B. CONC. BARRIER RAIL. PHASE II	0.2							92			3,546																				135	6			
	E.B. CONC. BARRIER RAIL. PHASE I								92			3,537																				138	6			
	E.B. CONC. BARRIER RAIL. PHASE II								92			3,537																				138	6			
	TOTAL I-74-24-4937B	0.2							368			27,739												515.8	213.2				8	364		765	24	96	56	162
I-74-29-4941B	W.B. APPROACH SLAB PHASE I											3,767												145.5	53.3				2	99		60		24	28	45
	W.B. APPROACH SLAB PHASE II											3,024												112.4	53.3				2	83		48		24		36
	E.B. APPROACH SLAB PHASE I											3,767												145.5	53.3				2	99		60		24	28	45
	E.B. APPROACH SLAB PHASE II											3,024												112.4	53.3				2	83		48		24		36
	W.B. CONC. BARRIER RAIL. PHASE I								72			2,685																				108	5			
	W.B. CONC. BARRIER RAIL. PHASE II								72			2,685																				108	5			
	E.B. CONC. BARRIER RAIL. PHASE I								72			2,685																				108	5			
	E.B. CONC. BARRIER RAIL. PHASE II								72			2,685																				108	5			
	TOTAL I-74-29-4941B								288			24,322												515.8	213.2				8	364		648	20	96	56	162
I-74-30-4942B	W.B. APPROACH SLAB PHASE I		1.5									4,695												175.0	53.3				2	114		68		24	33	45
	W.B. APPROACH SLAB PHASE II		3.0									3,885												141.0	53.3				2	97		56		24		36
	E.B. APPROACH SLAB PHASE I		1.5									4,695												175.0	53.3				2	114		68		24	33	45
	E.B. APPROACH SLAB PHASE II		3.0									3,885												141.0	53.3				2	97		56		24		36
	W.B. CONC. BARRIER RAIL. PHASE I								127			4,894																				190	8			
	W.B. CONC. BARRIER RAIL. PHASE II								127			4,894																				190	8			
	E.B. CONC. BARRIER RAIL. PHASE I								127			4,894																				190	8			
	E.B. CONC. BARRIER RAIL. PHASE II								127			4,894																				190	8			
	TOTAL I-74-30-4942B		9.0						508			36,736												632.0	213.2				8	422		1,008	32	96	66	162
	TOTAL ALL THREE BRIDGES	0.2	9.0						1,164			88,797												1,663.6	639.6				24	1,150		2,421	76	288	178	486

REVISIONS	
DATE	ITEM

BRIDGE SUMMARY

INDIANA DEPARTMENT OF TRANSPORTATION

MONTGOMERY COUNTY

SCALE: NONE

DATE: October 31, 1995

Jerry D. Ritchie

DRAWING: OF SHEET: 24 OF 49

PROJECT: IM-74-1(118)

BRIDGE CONTRACT NO. B-22242

BRIDGE FILE: I-74-30-4942B

JERRY D. RITCHIE REGISTERED No. 12868 STATE OF INDIANA PROFESSIONAL ENGINEER

SUMMARIZED W.K.S. CK'D. J.D.R.

TRACED W.K.S. CK'D. J.D.R.

94-223-09A \ XSUM \ 1=1

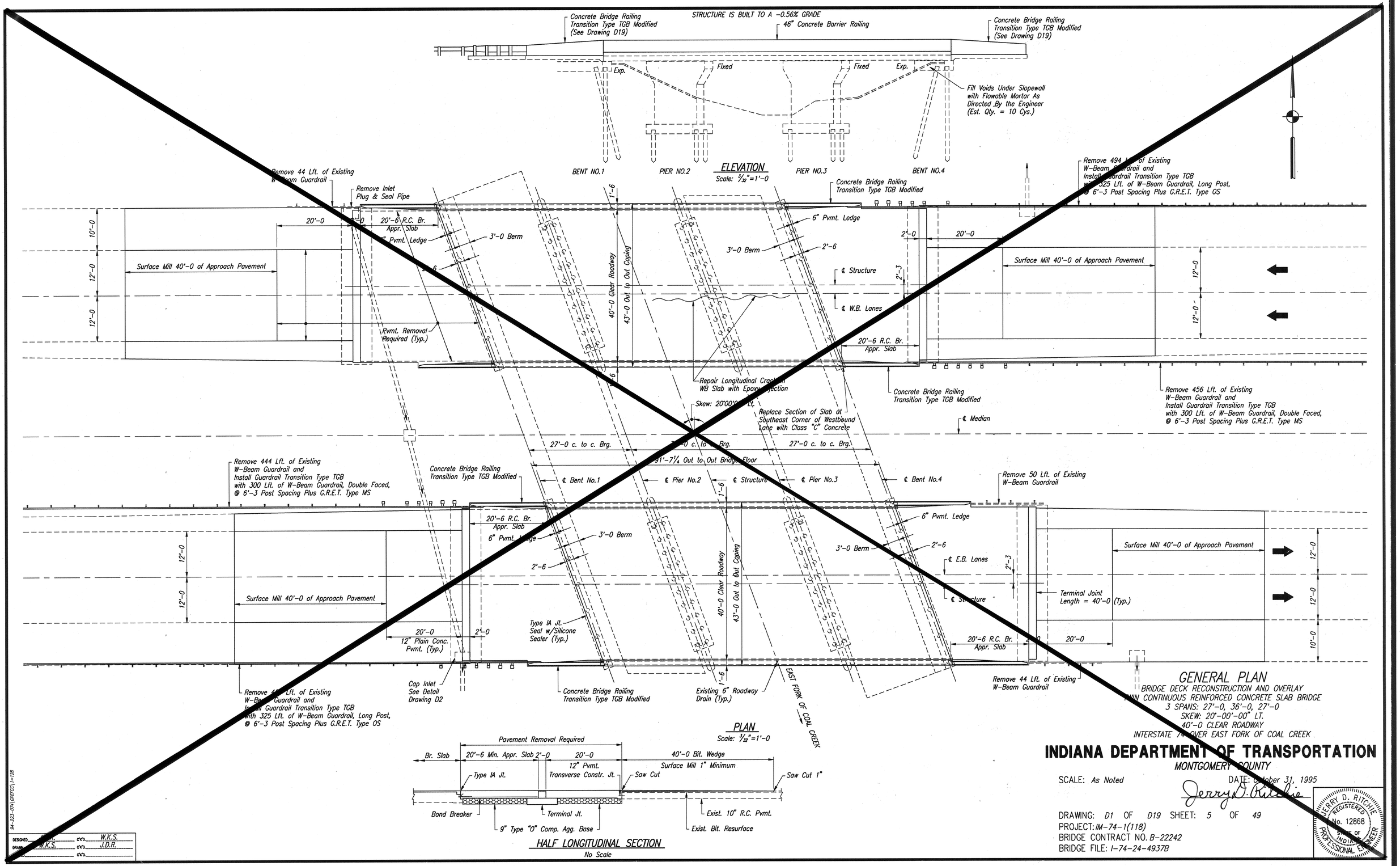
Concrete Bridge Railing Transition Type TGB Modified (See Drawing D19)
STRUCTURE IS BUILT TO A -0.56% GRADE
46" Concrete Barrier Railing
Concrete Bridge Railing Transition Type TGB Modified (See Drawing D19)
Exp.
Fixed
Fixed
Exp.
Fill Voids Under Slopewall with Flowable Mortar As Directed By the Engineer (Est. Qty. = 10 Cys.)
BENT NO.1
PIER NO.2
PIER NO.3
BENT NO.4
ELEVATION
Scale: 3/32"=1'-0
Remove 44 Lft. of Existing W-Beam Guardrail
Remove Inlet Plug & Seal Pipe
Concrete Bridge Railing Transition Type TGB Modified
Remove 494 Lft. of Existing W-Beam Guardrail and Install Guardrail Transition Type TGB with 325 Lft. of W-Beam Guardrail, Long Post, @ 6'-3 Post Spacing Plus G.R.E.T. Type OS
20'-0
20'-6 R.C. Br. Appr. Slab
Pvmt. Ledge
3'-0 Berm
6" Pvmt. Ledge
3'-0 Berm
2'-6
2'-0
20'-0
Surface Mill 40'-0 of Approach Pavement
Surface Mill 40'-0 of Approach Pavement
10'-0
12'-0
12'-0
12'-0
12'-0
1'-6
40'-0 Clear Roadway
43'-0 Out to Out Coping
℄ Structure
℄ W.B. Lanes
2'-3
Pvmt. Removal Required (Typ.)
20'-6 R.C. Br. Appr. Slab
Repair Longitudinal Crack in WB Slab with Epoxy Injection
Concrete Bridge Railing Transition Type TGB Modified
Remove 456 Lft. of Existing W-Beam Guardrail and Install Guardrail Transition Type TGB with 300 Lft. of W-Beam Guardrail, Double Faced, @ 6'-3 Post Spacing Plus G.R.E.T. Type MS
Skew: 20°00'00" Lt.
Replace Section of Slab at Southeast Corner of Westbound Lane with Class "C" Concrete
℄ Median
27'-0 c. to c. Brg.
27'-0 c. to c. Brg.
27'-0 c. to c. Brg.
91'-7¼ Out to Out Bridge Floor
Remove 444 Lft. of Existing W-Beam Guardrail and Install Guardrail Transition Type TGB with 300 Lft. of W-Beam Guardrail, Double Faced, @ 6'-3 Post Spacing Plus G.R.E.T. Type MS
Concrete Bridge Railing Transition Type TGB Modified
℄ Bent No.1
℄ Pier No.2
℄ Structure
℄ Pier No.3
℄ Bent No.4
Remove 50 Lft. of Existing W-Beam Guardrail
20'-6 R.C. Br. Appr. Slab
6" Pvmt. Ledge
3'-0 Berm
2'-6
6" Pvmt. Ledge
3'-0 Berm
2'-6
℄ E.B. Lanes
℄ Structure
Surface Mill 40'-0 of Approach Pavement
Surface Mill 40'-0 of Approach Pavement
Terminal Joint Length = 40'-0 (Typ.)
Type IA Jt. Seal w/Silicone Sealer (Typ.)
20'-0
12" Plain Conc. Pvmt. (Typ.)
2'-0
20'-6 R.C. Br. Appr. Slab
20'-0
Remove 494 Lft. of Existing W-Beam Guardrail and Install Guardrail Transition Type TGB with 325 Lft. of W-Beam Guardrail, Long Post, @ 6'-3 Post Spacing Plus G.R.E.T. Type OS
Cap Inlet See Detail Drawing D2
Concrete Bridge Railing Transition Type TGB Modified
Existing 6" Roadway Drain (Typ.)
EAST FORK OF COAL CREEK
Remove 44 Lft. of Existing W-Beam Guardrail
PLAN
Scale: 3/32"=1'-0
Pavement Removal Required
Br. Slab
20'-6 Min. Appr. Slab
2'-0
20'-0
12" Pvmt. Transverse Constr. Jt.
40'-0 Bit. Wedge
Surface Mill 1" Minimum
Type IA Jt.
Saw Cut
Saw Cut 1"
Bond Breaker
Terminal Jt.
Exist. 10" R.C. Pvmt.
9" Type "O" Comp. Agg. Base
Exist. Bit. Resurface
HALF LONGITUDINAL SECTION
No Scale
GENERAL PLAN
BRIDGE DECK RECONSTRUCTION AND OVERLAY
WITH CONTINUOUS REINFORCED CONCRETE SLAB BRIDGE
3 SPANS: 27'-0, 36'-0, 27'-0
SKEW: 20°-00'-00" LT.
40'-0 CLEAR ROADWAY
INTERSTATE 74 OVER EAST FORK OF COAL CREEK
INDIANA DEPARTMENT OF TRANSPORTATION
MONTGOMERY COUNTY
SCALE: As Noted
DATE: October 31, 1995
Jerry D. Ritchie
DRAWING: D1 OF D19 SHEET: 5 OF 49
PROJECT: IM-74-1(118)
BRIDGE CONTRACT NO. B-22242
BRIDGE FILE: I-74-24-4937B
JERRY D. RITCHIE REGISTERED No. 12868 STATE OF INDIANA PROFESSIONAL ENGINEER
DESIGNED W.K.S. CK'D. W.K.S.
DRAWN W.K.S. CK'D. J.D.R.
CK'D.
94-223-07A (OFFICE) 1-128

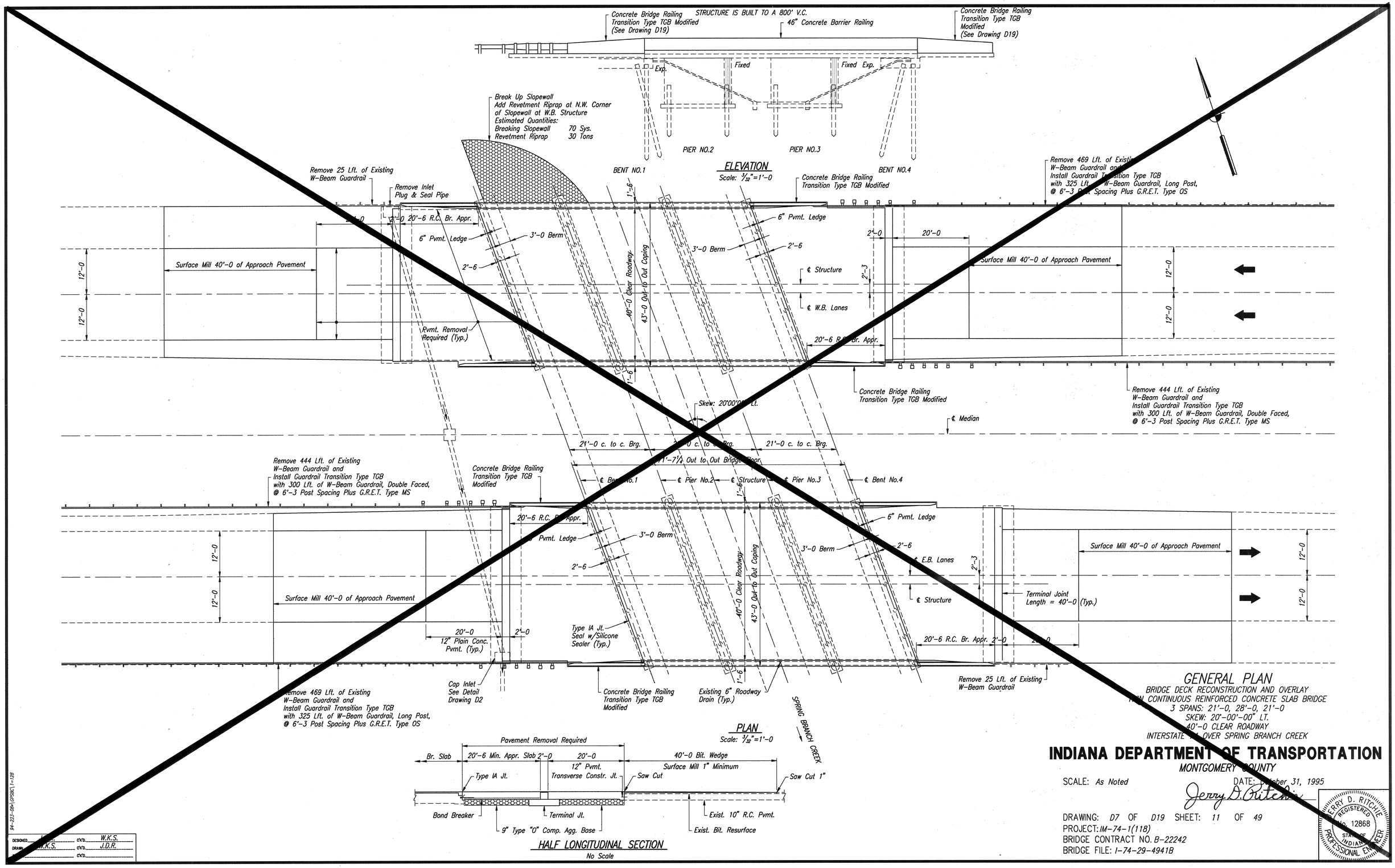
Concrete Bridge Railing Transition Type TGB Modified (See Drawing D19)
STRUCTURE IS BUILT TO A 800' V.C.
46" Concrete Barrier Railing
Concrete Bridge Railing Transition Type TGB Modified (See Drawing D19)
Exp.
Fixed
Fixed
Exp.
Break Up Slopewall
Add Revetment Riprap at N.W. Corner of Slopewall at W.B. Structure
Estimated Quantities:
Breaking Slopewall 70 Sys.
Revetment Riprap 30 Tons
PIER NO.2
PIER NO.3
ELEVATION
Scale: 3/32"=1'-0
BENT NO.1
BENT NO.4
Remove 25 Lft. of Existing W-Beam Guardrail
Remove Inlet Plug & Seal Pipe
Concrete Bridge Railing Transition Type TGB Modified
Remove 469 Lft. of Existing W-Beam Guardrail and Install Guardrail Transition Type TGB with 325 Lft. of W-Beam Guardrail, Long Post, @ 6'-3 Post Spacing Plus G.R.E.T. Type OS
20'-6 R.C. Br. Appr.
6" Pvmt. Ledge
3'-0 Berm
2'-6
1'-6
40'-0 Clear Roadway
43'-0 Out-to Out Coping
Surface Mill 40'-0 of Approach Pavement
12'-0
12'-0
Pvmt. Removal Required (Typ.)
℄ Structure
℄ W.B. Lanes
2'-3
2'-0
20'-0
Concrete Bridge Railing Transition Type TGB Modified
Remove 444 Lft. of Existing W-Beam Guardrail and Install Guardrail Transition Type TGB with 300 Lft. of W-Beam Guardrail, Double Faced, @ 6'-3 Post Spacing Plus G.R.E.T. Type MS
Skew: 20°00'00" Lt.
℄ Median
21'-0 c. to c. Brg.
21'-0 c. to c. Brg.
21'-0 c. to c. Brg.
℄ Bent No.1
℄ Pier No.2
℄ Structure
℄ Pier No.3
℄ Bent No.4
℄ E.B. Lanes
Terminal Joint Length = 40'-0 (Typ.)
20'-0
12" Plain Conc. Pvmt. (Typ.)
Type IA Jt. Seal w/Silicone Sealer (Typ.)
Cap Inlet See Detail Drawing D2
Existing 6" Roadway Drain (Typ.)
SPRING BRANCH CREEK
PLAN
Scale: 3/32"=1'-0
Pavement Removal Required
Br. Slab
20'-6 Min. Appr. Slab
40'-0 Bit. Wedge
Surface Mill 1" Minimum
12" Pvmt. Transverse Constr. Jt.
Type IA Jt.
Saw Cut
Saw Cut 1"
Bond Breaker
Terminal Jt.
9" Type "O" Comp. Agg. Base
Exist. 10" R.C. Pvmt.
Exist. Bit. Resurface
HALF LONGITUDINAL SECTION
No Scale
GENERAL PLAN
BRIDGE DECK RECONSTRUCTION AND OVERLAY
CONTINUOUS REINFORCED CONCRETE SLAB BRIDGE
3 SPANS: 21'-0, 28'-0, 21'-0
SKEW: 20°-00'-00" LT.
40'-0 CLEAR ROADWAY
INTERSTATE 74 OVER SPRING BRANCH CREEK
INDIANA DEPARTMENT OF TRANSPORTATION
MONTGOMERY COUNTY
SCALE: As Noted
DATE: October 31, 1995
Jerry D. Ritchie
DRAWING: D7 OF D19 SHEET: 11 OF 49
PROJECT: IM-74-1(118)
BRIDGE CONTRACT NO. B-22242
BRIDGE FILE: I-74-29-4941B
JERRY D. RITCHIE REGISTERED No. 12868 STATE OF INDIANA PROFESSIONAL ENGINEER
DESIGNED W.K.S. ck'd. W.K.S.
DRAWN J.D.R. ck'd. J.D.R.
94-221-004\DP5BC1 1=128