FEDERAL ROAD REGION NO.	STATE	PROJECT NO.	FISCAL YEAR	SHEET NO.	TOTAL SHEETS
5	IND.		1994	1	57

INDIANA DEPARTMENT OF TRANSPORTATION

BRIDGE PLANS

FOR SPANS OVER 20 FEET ON INTERSTATE ROUTE NO. 70

PROJECT NO. IM/70-4(062)109 P.E.
( ) R/W
ACIM/70-4 (064) CONST

I-70 AT: EBL RP 109+008E, RP 111+051E, RP 112+066E, AND RP 115+057E
WBL RP 109+008W, RP 111+051W, RP 112+066W, AND RP 115+057W

DECK RECONSTRUCTION, STRUCTURE REHABILITATION AND WIDENING ON INTERSTATE 70 OVER NAMELESS CREEK (STRUCTURE NUMBER I-70-109-5133B), ANTHONY CREEK (STRUCTURE NUMBER I-70-111-5135B), SIX MILE CREEK (STRUCTURE NUMBER I-70-113-5137B), AND MONTGOMERY CREEK (STRUCTURE NUMBERS I-70-115-5140B & I-70-115-5140JB); ALL BEING IN SECTIONS 20, 22 AND 23, T16N, R8E IN HANCOCK COUNTY, INDIANA AND SECTION 17, T16N, R9E IN HENRY COUNTY, INDIANA.

I-70-109-5133B

BRIDGE	LENGTH:	0.015 MI.
ROADWAY	LENGTH:	0.012 MI.
TOTAL	LENGTH:	0.027 MI.
MAX.	GRADE:	+0.33 %

I-70-111-5135B

BRIDGE	LENGTH:	0.013 MI.
ROADWAY	LENGTH:	0.008 MI.
TOTAL	LENGTH:	0.021 MI.
MAX.	GRADE:	+0.84 %

I-70-113-5137B

BRIDGE	LENGTH:	0.016 MI.
ROADWAY	LENGTH:	0.008 MI.
TOTAL	LENGTH:	0.024 MI.
MAX.	GRADE:	-1.00 %

I-70-115-5140B & I-70-115-5140JB

BRIDGE	LENGTH:	0.041 MI.
ROADWAY	LENGTH:	0.012 MI.
TOTAL	LENGTH:	0.053 MI.
MAX.	GRADE:	+3.00 %

INDEX

PROJECT	STRUCTURE	TYPE	SPAN	OVER	STATION (LINE 'A')
IM/70-4 (064)	I-70-109-5133B	CONTINUOUS REINFORCED CONCRETE SLAB	3 SPANS OF 23'-9", 30'-0", 23'-9"	NAMELESS CREEK	1092+55.0
	I-70-111-5135B	CONTINUOUS REINFORCED CONCRETE SLAB	3 SPANS OF 19'-0", 26'-0", 19'-0"	ANTHONY CREEK	1220+31.0
	I-70-113-5137B	CONTINUOUS REINFORCED CONCRETE SLAB	3 SPANS OF 24'-0", 32'-0", 24'-0"	SIX MILE CREEK	1282+48.0
	I-70-115-5140B & I-70-115-5140JB	COMPOSITE CONTINUOUS STEEL BEAM	3 SPANS OF 65'-6", 79'-0", 65'-6"	MONTGOMERY CREEK	1496+52.0

SHEET NO.	SHEET DESIGNATION	SUBJECT	F.H.W.A. APPROVAL
1	ONE SHEET	INDEX & TITLE SHEET	
		I-70-109-5133B	
2-3	C1-C2	GENERAL PLAN	
4	C3	DETAILS	
5-6	C4-C5	APPROACH SLAB DETAILS	
7-9	C6-C8	CONCRETE RAILING DETAILS	
		I-70-111-5135B	
10-11	C9-C10	GENERAL PLAN	
12	C11	DETAILS	
		I-70-113-5137B	
13-14	C12-C13	GENERAL PLAN	
15	C14	DETAILS	
		I-70-111-5135B & I-70-113-5137B	
16	C15	APPROACH SLAB DETAILS	
17-18	C16-C17	CONCRETE RAILING DETAILS	
		I-70-115-5140B & I-70-115-5140JB	
19-20	S18-S19	GENERAL PLAN	
21-22	S20-S21	BENT 1 & 4 DEMOLITION DETAILS	
23	S22	BENT 1 & 4 (WESTBOUND)	
24	S23	BENT 1 (EASTBOUND)	
25	S24	BENT 4 (EASTBOUND)	
26-27	S25-S26	BENT 1 & 4 DETAILS	
28	S27	PIER DEMOLITION DETAILS	
29-30	S28-S29	PIER 2 EASTBOUND	
31-32	S30-S31	PIER 3 EASTBOUND	
33	S32	PIER DETAILS	
34	S33	BEARING DETAILS	
35	S34	FRAMING PLAN	
36-38	S35-S37	STRUCTURAL STEEL DETAILS	
39	S38	FLOOR PLAN (WESTBOUND)	
40	S39	FLOOR PLAN (EASTBOUND)	
41-42	S40-S41	FLOOR DETAILS	
43-44	S42-S43	SCREEDS	
45	S44	POLYMER MODIFIED ASPHALT EXPANSION JOINT DETAILS	
46	S45	APPROACH SLAB DETAILS	
47-49	S46-S48	CONCRETE RAILING DETAILS	
50	ONE SHEET	BRIDGE SUMMARY	

INDEX CONTINUED
STANDARD DRAWINGS

SHEET NO.	SHEET DESIGNATION	SUBJECT	F. H. W. A. APPROVAL	ADOPTED "A" REVISION "R"
51	BRIDGE STD. BR1A	CONCRETE BRIDGE RAILING TRANSITION TYPE TGB	3-9-93	A AUG. 1992
	BRIDGE STD. BR2	ALUMINUM BRIDGE RAILING DETAILS		
	BRIDGE STD. BR3	STEEL BRIDGE RAILING		
	BRIDGE STD. BR4	STEEL BRIDGE RAILING DETAILS		
	BRIDGE STD. BR5	RAILING CONNECTION DETAILS		
	BRIDGE STD.			
52	BRIDGE STD. C1	MISCELLANEOUS DETAILS	1-26-93	A DEC. 1992
	BRIDGE STD. C2	MISCELLANEOUS DETAILS		
53	BRIDGE STD. C3	MISCELLANEOUS DETAILS	1-26-93	A NOV. 1992
	BRIDGE STD. C4	MISCELLANEOUS DETAILS		
54	BRIDGE STD. D	CASTING DETAILS ROADWAY DRAINS	1-11-89	R 9-1-88
	BRIDGE STD. D1	ADJUSTING FRAME DETAILS FOR ROADWAY DRAINS		
	BRIDGE STD.			
	BRIDGE STD. PB	PRESTRESSED CONCRETE TYPE I-BEAMS		
	BRIDGE STD. PB	PRESTRESSED CONCRETE TYPE I-BEAMS		
	BRIDGE STD. PB6	PRESTRESSED BOX BEAMS		
	BRIDGE STD. PB	PRESTRESSED COMPOSITE BOX BEAMS WIDE		
	BRIDGE STD. PB	PRESTRESSED COMPOSITE BOX BEAMS WIDE		
	BRIDGE STD. PB10	TOLERANCES FOR FABRICATION OF PRESTRESSED BEAMS		
	BRIDGE STD. PB11	ELASTOMERIC BEARING PAD DETAILS		
	BRIDGE STD.			
	BRIDGE STD.			
	BRIDGE STD. R2A	BRIDGE LIGHTING DETAILS		
	BRIDGE STD. R2B	BRIDGE LIGHTING DETAILS		
55	BRIDGE STD. S1	MISCELLANEOUS DETAILS	1-22-87	R 12-01-86
56	BRIDGE STD. SH1	STEEL SHOE DETAILS	2-1-85	R 10-29-84
	BRIDGE STD. T SHEET A	STANDARD TEMPORARY BRIDGE		
	BRIDGE STD. T SHEET B	STANDARD TEMPORARY BRIDGE		
	BRIDGE STD.			
	BRIDGE STD.			
	BRIDGE STD.			
	BRIDGE STD.			
	BRIDGE STD.			
	ROAD STD. SHEET A	STANDARD PAVEMENT JOINTS		
57	ROAD STD. SHEET B	STANDARD PAVEMENT JOINTS	1-26-93	A NOV. 1992
	ROAD STD. SHEET	MISCELLANEOUS STANDARDS		
	ROAD STD. SHEET	MISCELLANEOUS STANDARDS		
	ROAD STD. SHEET	MISCELLANEOUS STANDARDS		
	ROAD STD. SHEET	MISCELLANEOUS STANDARDS		
	ROAD STD. SHEET	MISCELLANEOUS STANDARDS		
	ROAD STD. SHEET	MISCELLANEOUS STANDARDS		
	ROAD STD. SHEET	MISCELLANEOUS STANDARDS		
	ROAD STD. SHEET	MISCELLANEOUS STANDARDS		
	ROAD STD. SHEET	MISCELLANEOUS STANDARDS		
	ROAD STD. SHEET	MISCELLANEOUS STANDARDS		
	ROAD STD. SHEET	MISCELLANEOUS STANDARDS		
	ROAD STD. SHEET	MISCELLANEOUS STANDARDS		
	ROAD STD. SHEET	MISCELLANEOUS STANDARDS		
	ROAD STD. SHEET	MISCELLANEOUS STANDARDS		
	ROAD STD. SHEET	MISCELLANEOUS STANDARDS		
	ROAD STD. SHEET	MISCELLANEOUS STANDARDS		
	ROAD STD. SHEET	MISCELLANEOUS STANDARDS		
	ROAD STD. SHEET	MISCELLANEOUS STANDARDS		
	ROAD STD. SHEET	MISCELLANEOUS STANDARDS		
	ROAD STD. SHEET	MISCELLANEOUS STANDARDS		
	ROAD STD. SHEET	MISCELLANEOUS STANDARDS		
	ROAD STD. SHEET	MISCELLANEOUS STANDARDS		
	ROAD STD. SHEET GR	GUARD RAIL CLASS		
	ROAD STD. SHEET GR	GUARD RAIL CLASS		
	ROAD STD. SHEET GR	GUARD RAIL CLASS		
	ROAD STD. SHEET GR	GUARD RAIL CLASS		
	ROAD STD. SHEET GR 5	ALUMINUM GUARD RAIL DETAILS		
	ROAD STD. SHEET GR 6	STEEL TUBE GUARD RAIL DETAILS		
	ROAD STD. SHEET GR 7	GUARD RAIL PIER CONNECTION DETAILS		
	ROAD STD. SHEET GR 8	STEEL BEAM GUARD RAIL		
	ROAD STD. SHEET GR 9	ALUMINUM BEAM GUARD RAIL		
	ROAD STD. SHEET GR 10	GUARD RAIL BURIED ENDS		
	ROAD STD. SHEET GR 10A	GUARD RAIL BREAKAWAY CABLE TERM.		
	ROAD STD.			
	ROAD STD. SHEET CB2	TEMPORARY CONCRETE BARRIER		
	ROAD STD. SHEET 1 DETOURS	STANDARD DETOUR SIGNS		
	ROAD STD. SHEET 1A DETOURS	STANDARD DETOUR SIGNS		
	ROAD STD. SHEET 1B DETOURS	STANDARD DETOUR SIGNS		
	ROAD STD. SHEET 2 DETOURS	STANDARD DETOUR SIGNS		
	ROAD STD. SHEET 2A DETOURS	STANDARD DETOUR SIGNS		
	ROAD STD. SHEET 3 DETOURS	STANDARD DETOUR SIGNS		
	ROAD STD. SHEET 3A DETOURS	STANDARD DETOUR SIGNS		
	ROAD STD. SHEET 4 DETOURS	STANDARD DETOUR SIGNS		
	ROAD STD. SHEET 5 DETOURS	STANDARD DETOUR SIGNS		
	ROAD STD. SHEET 5A DETOURS	STANDARD DETOUR SIGNS		

TRAFFIC DATA		INTERSTATE 70
A.D.T. (1994) (EA. STRUCTURE)		34,760 V.P.D.
A.D.T. (2014 PROJECTED)		57,560 V.P.D.
D.H.V. (2014 PROJECTED)		3,454 V.P.D.
TRUCKS		D.H.V. 32% A.D.T. 30%
DESIGN SPEED		70 M.P.H.
ACCESS CONTROL		FULL
FUNCTIONAL CLASSIFICATION		INTERSTATE
TERRAIN		LEVEL

NOTE:
WHEREVER "INDIANA DEPARTMENT OF HIGHWAYS" APPEARS IN THESE PLANS, IT SHALL BE INTERPRETED AS "INDIANA DEPARTMENT OF TRANSPORTATION"

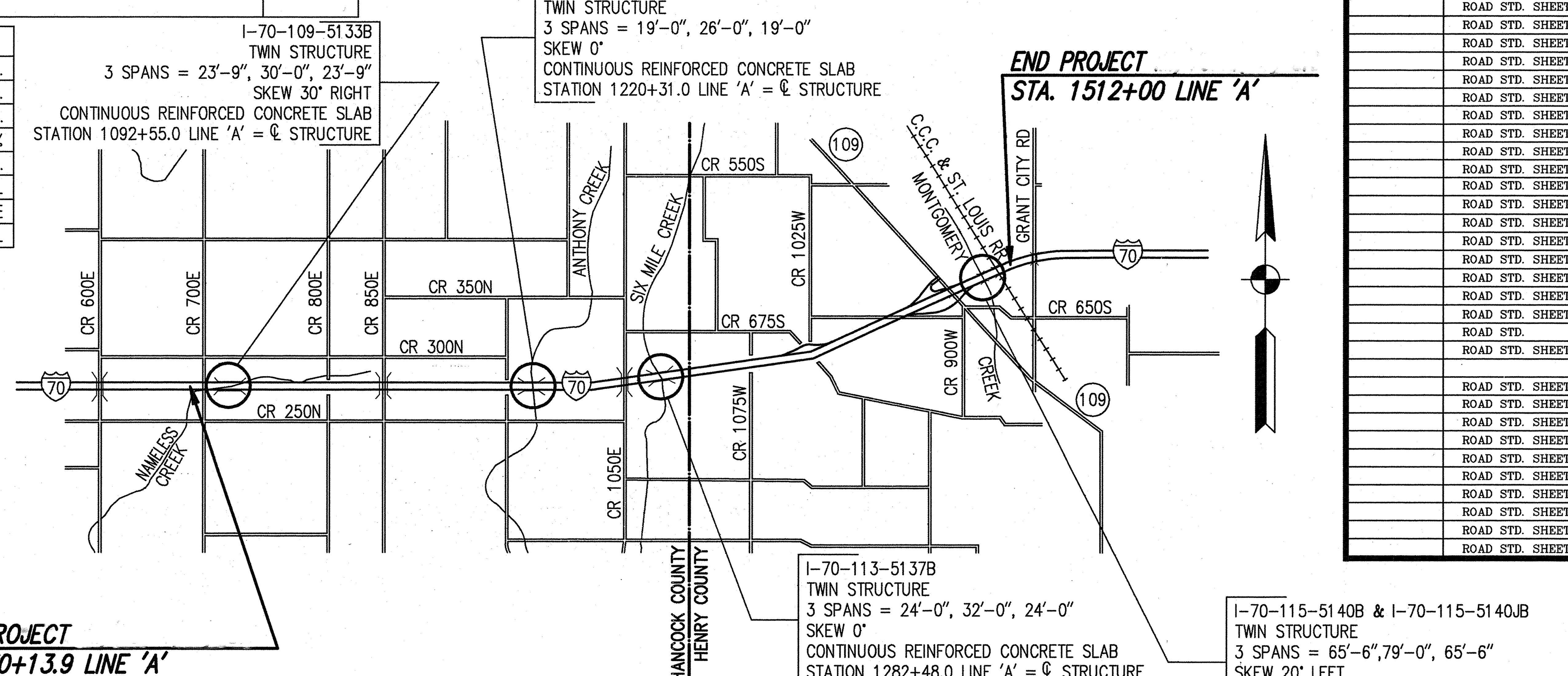

HANCOCK & HENRY COUNTIES
SCALE: 1" = 4000'

THESE PLANS PREPARED BY
COLE ASSOCIATES
ENGINEERS - ARCHITECTS
2211 E. JEFFERSON BLVD.
SOUTH BEND, IN. 46615
(219) 236-4400

CERTIFIED BY: 8.30.94
COLE ASSOCIATES INC.

219-236-4400

FARID PEZESHK
REGISTERED
No. 890147
STATE OF INDIANA
PROFESSIONAL ENGINEER

NOTE:
WHENEVER IM-70-4(064)
APPEARS ON THESE PLANS OR CONTRACT DOCUMENTS
IT SHALL BE INTERPRETED AS ACIM-70-4(064)

APPROVED FOR LETTING 9/13/94
CHIEF DIVISION OF DESIGN
INDIANA DEPARTMENT OF TRANSPORTATION

FEDERAL HIGHWAY ADMINISTRATION
DEPARTMENT OF TRANSPORTATION
APPROVED:
DIVISION ADMINISTRATOR DATE

REVISIONS

DATE	SHEET NO.

REVISIONS

DATE	SHEET NO.

INDIANA DEPARTMENT OF TRANSPORTATION
STANDARD SPECIFICATIONS DATED 1993
TO BE USED WITH THESE PLANS.

BRIDGE FILE: I-70-109-5133B
BRIDGE FILE: I-70-111-5135B
BRIDGE FILE: I-70-113-5137B
BRIDGE FILE: I-70-115-5140B & I-70-115-5140JB

R 21474 4 OF 4

DES. NO. 9139366, 9139367, 9139368 & 9139785

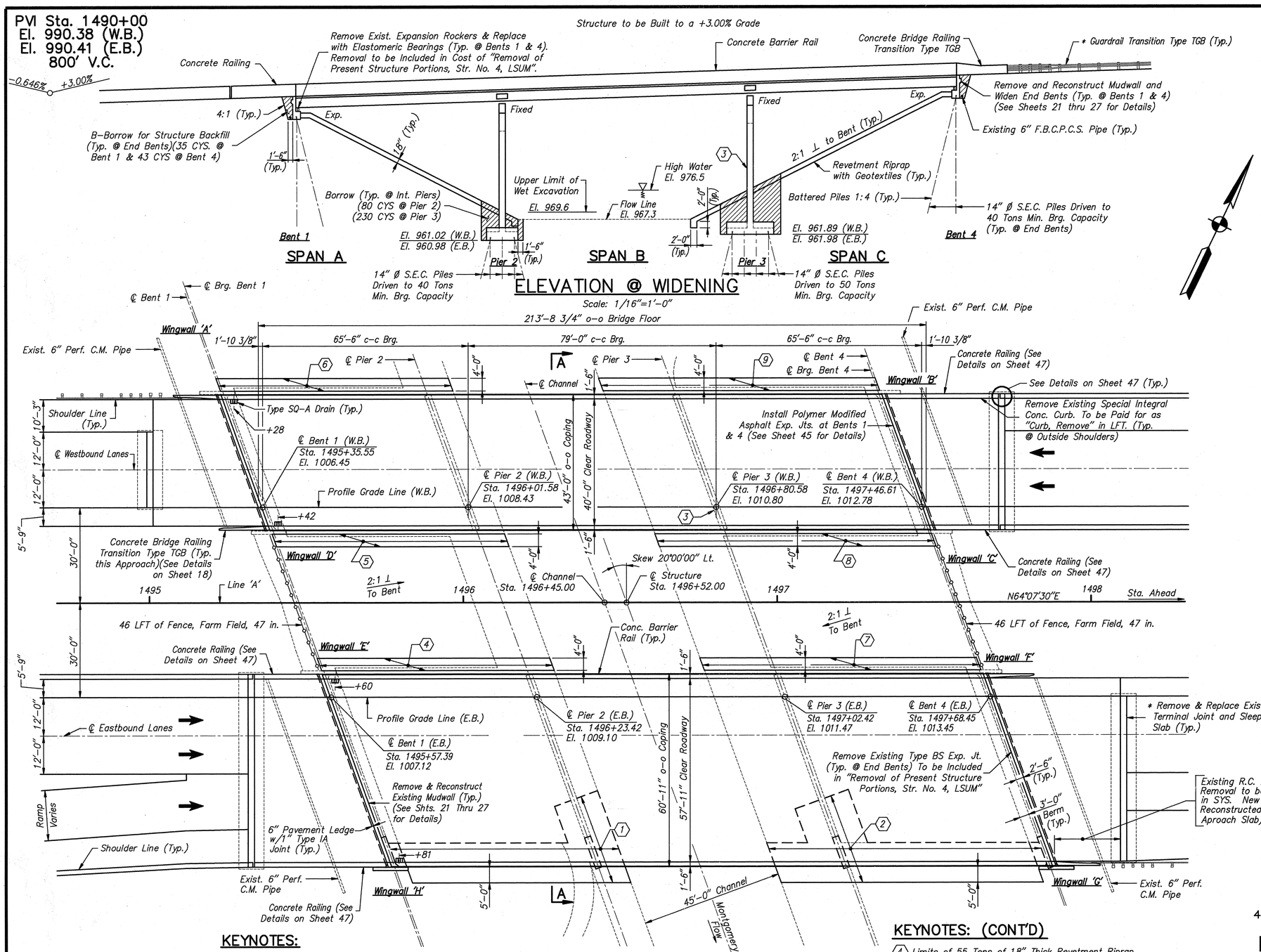

KEYNOTES:

1. Limits of 237 Tons of 18" Thick Revetment Riprap and 174 SYS of Geotextiles.
2. Limits of 281 Tons of 18" Thick Revetment Riprap and 203 SYS of Geotextiles.
3. Remove Spalled Concrete @ Pier 3 of Westbound Structure and Surface Seal Affected Area. To be Included in Cost of "Removal of Present Structure Portions, Str. No. 4, LSUM".

* Indicates Road Item

PLAN

Scale: 1/16"=1'-0"

KEYNOTES: (CONT'D)

4. Limits of 55 Tons of 18" Thick Revetment Riprap.
5. Limits of 55 Tons of 18" Thick Revetment Riprap.
6. Limits of 55 Tons of 18" Thick Revetment Riprap.
7. Limits of 64 Tons of 18" Thick Revetment Riprap.
8. Limits of 64 Tons of 18" Thick Revetment Riprap.
9. Limits of 64 Tons of 18" Thick Revetment Riprap.

DESIGN DATA

Allowable Design Stresses:

Reinforcing Steel (Grade 60):	fy = 60,000 psi
Class C Concrete:	f'c = 4,000 psi
Class A Concrete:	f'c = 3,500 psi
Class B Concrete:	f'c = 3,000 psi

Live Load:
Designed for HS 20 – 44 Truck Loading in Accordance with 1992 AASHTO Specifications and Current Interim Specifications.

Checked for Special Loading of 2–24,000# Axles Spaced at 4'–0" Centers.

Dead Load:
Actual Dead Load Plus 35 psf Future Wearing Surface and 15 psf for Permanent Metal Forms. The Slab Thickness Consists of a 6 1/2" Structural Depth and a 1 1/2" Wearing Surface. Overall Slab (8") Consists of Class 'C' Concrete.

GENERAL NOTES

1. Existing bridge plans are on file at the Central File of the Indiana Department of Transportation under the following Bridge Files: I–70–115–5140 & 5140J and I–70–115–5140A & 514JA.
2. Depth of footings to be extended if found necessary. See Article 206.11 (c) of Specifications.
3. Piles shall have minimum bearing value shown on detail drawings. Determine pile lengths by Article 701.04 of Specifications.
4. Reinforcing Steel covering shall be 2 1/2" in Top and 1" min. in bottom of floor slabs, 3" in footings except bottom steel which shall be 4", 2" in columns, and 2" in all other parts, unless noted.
5. Concrete in footings to be Class 'B'.
6. Concrete in superstructure, railings, and top of end bents down to construction joint to be Class 'C'.
7. Concrete in end bents, pier caps and pier stems to be Class 'A'.
8. Concrete in structure not noted above to be Class 'A'.
9. Continuous concrete pours shall be required between construction joints as shown in detail plans.
10. Chamfer exposed edges 1" unless noted.
11. "Deleted"
12. "Deleted"
13. Tolerance in position of pile head maximum 2" in all locations.
14. The top of pier and end bent caps, top and front face of mudwalls, vertical face of end diaphragms, face of deck coping, and underside of bridge floor from coping to face of outside beam, deck surface and all faces of concrete barrier rails to be sealed in accordance with Article 702.20 of the Specifications. (Est. quantity = 32,641 SFT.)
15. The reinforced concrete approach slabs, concrete railing and concrete bridge Railing Transitions, Type TGB quantities are included with bridge plans.
16. Refer to roadway plans for maintenance of traffic.
17. See sheet 28 for removal details at Eastbound piers.
18. For sections and additional details see sheet 20.
19. Existing bridge deck and concrete overlays are to be removed. To be paid for as "Removal of Present Structure Portions, Str. No. 4," LSUM.
20. See sheet 21 for removal details at Eastbound bents.
21. See sheet 22 for removal details at Westbound bents.
20. Install shear stud connectors to existing and new W36's. (See sheet 36 for details)

GENERAL PLAN

DECK RECONSTRUCTION AND WIDENING
CONTINUOUS COMPOSITE STEEL BEAM BRIDGE
3 SPANS: 65'–6", 79'–0", 65'–6"; SKEW 20° LT.
40'–0" CLR. RDWY. (W.B. LANE); 57'–11" CLR. RDWY. (E.B. LANE)
I–70 OVER MONTGOMERY CREEK

INDIANA DEPARTMENT OF TRANSPORTATION

HENRY COUNTY

SCALE: – AS NOTED DATE: – AUGUST, 1994

DRAWING: – S18 OF 48 SHEET: – 19 OF 57
PROJECT: –IM/70–4 (064) STATION: –
BRIDGE CONTRACT NO. R–21474
BRIDGE FILE: – I–70–115–5140B & I–70–115–5140JB

FARID PETESHK REGISTERED No. 890147 STATE OF INDIANA PROFESSIONAL ENGINEER 8-30-94

DES. NO. 9139785

DRAWN Jlm	C'K'D LMK		
DESIGNED LMK	C'K'D MAK		
TRACED	C'K'D		

JOB NAME: I-70 EAST OF S.R.9 (BRIDGE #5140)
JOB #:9361224040
CAD FILENAME: C:\A\93204GP1.DWG
LAST REVISION DATE: 08/31/94
OPERATORS INITIALS: JLM

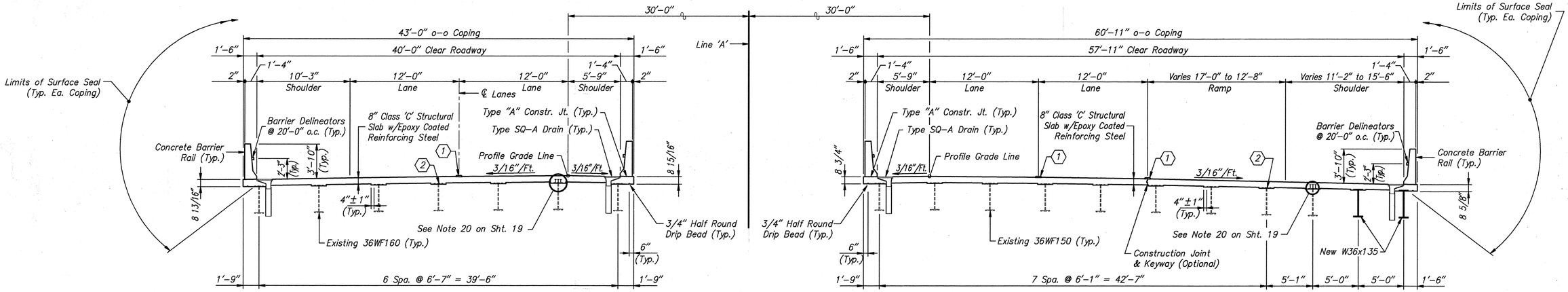

CROSS SECTION A–A

Scale: 3/16"=1'-0"

KEYNOTES:

1. Raised Pavement Markers (To be Installed and Paid for Under Road Contract).
2. Clean Top Flange of Existing Steel Beams (DO NOT PAINT)(Typ.) Cost to be Included in the Cost of "Shear Stud Connectors", Each.

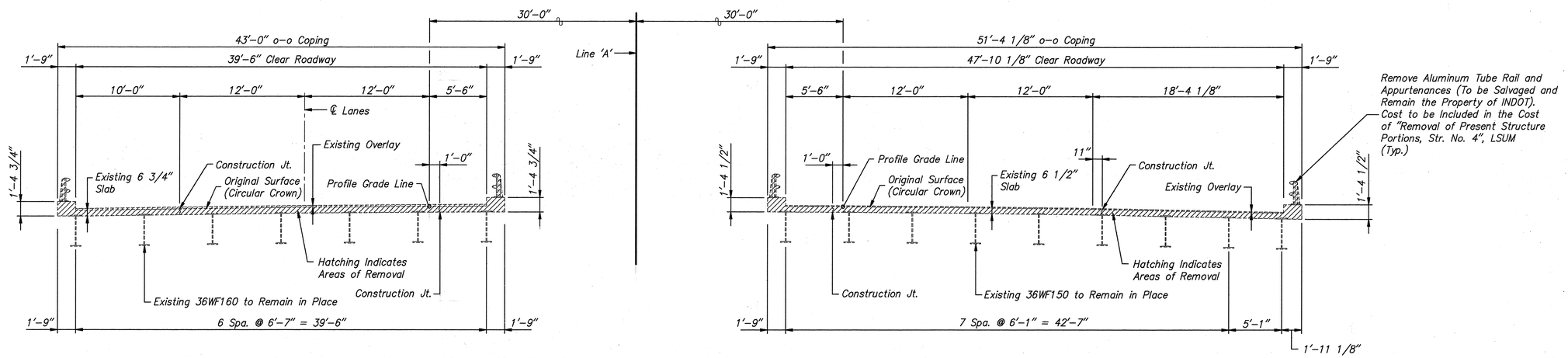

EXISTING SECTION A–A

Scale: 3/16"=1'-0"

STANDARD DRAWINGS

Road Std.	Bridge Std.	Purpose
JTS-B		Approach Slab
	BR-1A	Concrete Bridge Railing Transition Type TGB
	S1	B Borrow For Structure Backfill, 6" F.B.C.P.C.S.
	C1	Bar Bends and Notes, Pile Splices
	C3	Type IA Joint, Construction Joint Type A, Optional Railing Vert. Reinf. Splice
	D	Type SQ-A Drain and Grate
	SH1	Steel Shoe Details

APPROACH BILL OF MATERIALS (TOTAL)

13" Reinforced Cement Concrete Pavement	679 SYS
Type "O" Compacted Aggregate for Base	216 Tons
Epoxy Coated Reinforcing Steel	6,563 Lbs.
Reinforcing Steel	16,406 Lbs.
Pavement, Remove	543 SYS
Curb, Concrete Remove	115 LFT
Surface Seal	1,008 SFT
Concrete, Class "C" in Railing	14.8 CYS
Concrete Bridge Railing Transition Type TGB	4 Ea.

DRAWN Jlm C'K'D LMK
DESIGNED LMK C'K'D MAK
TRACED C'K'D

JOB NAME: I-70 EAST OF S.R.9 (BRIDGE #5140)
JOB #:9361220400
CAD FILENAME: C:\4\93204GP2.DWG
LAST REVISION DATE: 08/15/94
OPERATORS INITIALS: JJB

GENERAL PLAN

DECK RECONSTRUCTION AND WIDENING
CONTINUOUS COMPOSITE STEEL BEAM BRIDGE
3 SPANS: 65'-6", 79'-0", 65'-6"; SKEW 20° LT.
40'-0" CLR. RDWY. (W.B. LANE); 57'-11" CLR. RDWY. (E.B. LANE)
I-70 OVER MONTGOMERY CREEK

INDIANA DEPARTMENT OF TRANSPORTATION

HENRY COUNTY

SCALE: – AS NOTED DATE: – AUGUST,

FARID PEZESHK REGISTERED No. 890147 STATE OF INDIANA PROFESSIONAL ENGINEER

DRAWING: – S19 OF 48 SHEET: – 20 OF 57
PROJECT: –IM/70-4 (064) STATION: –
BRIDGE CONTRACT NO. R-21474
BRIDGE FILE: – I-70-115-5140B & I-70-115-5140JB

DES. NO. 9139785

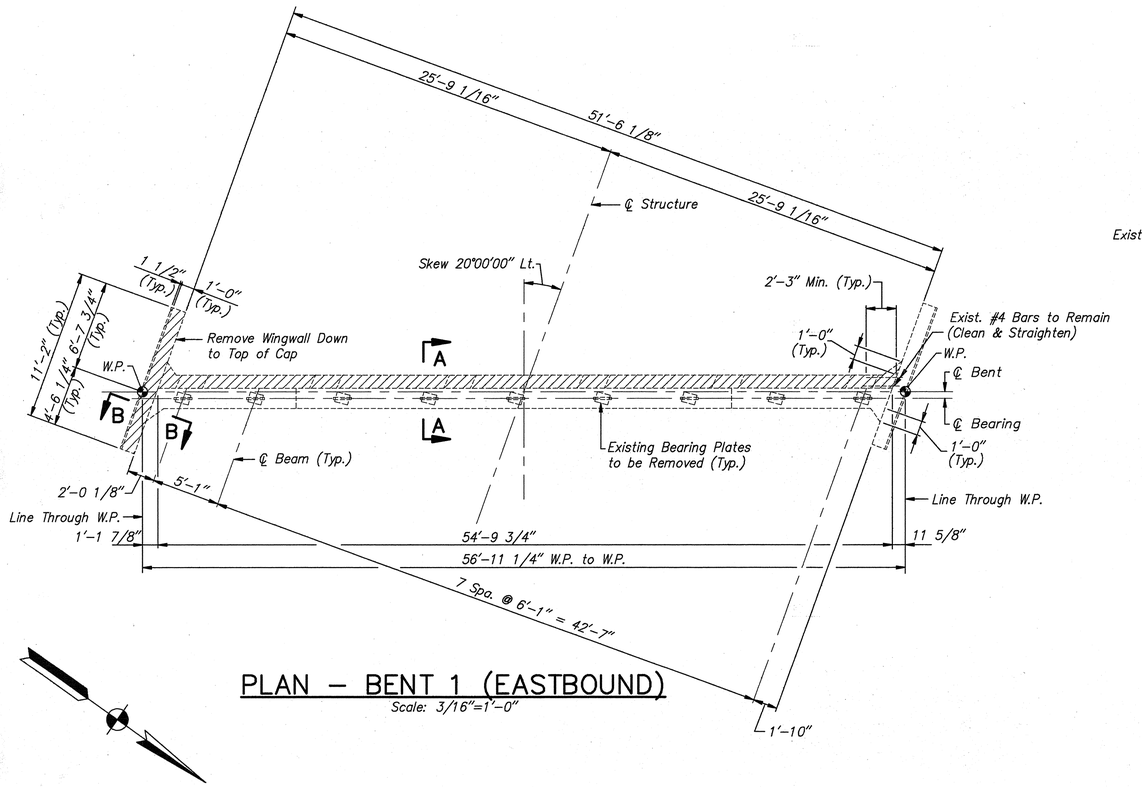

PLAN – BENT 1 (EASTBOUND)

Scale: 3/16"=1'-0"

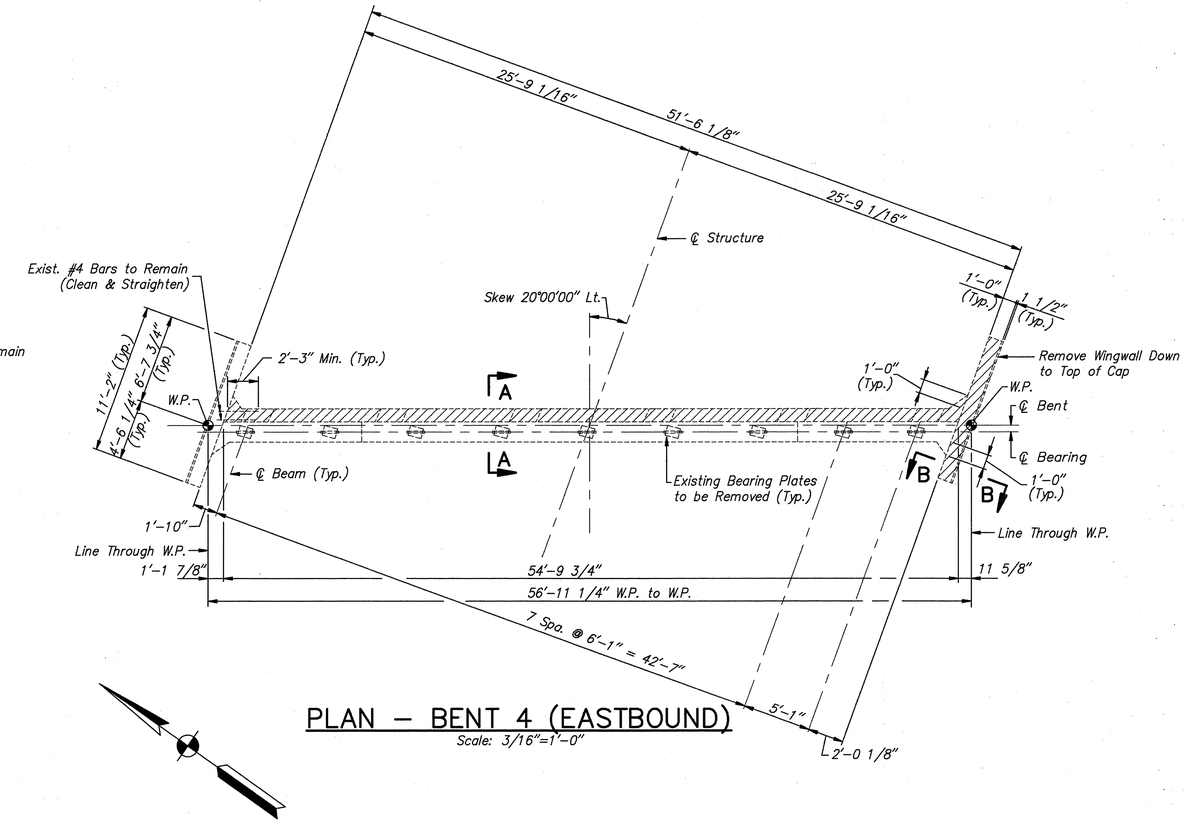

PLAN – BENT 4 (EASTBOUND)

Scale: 3/16"=1'-0"

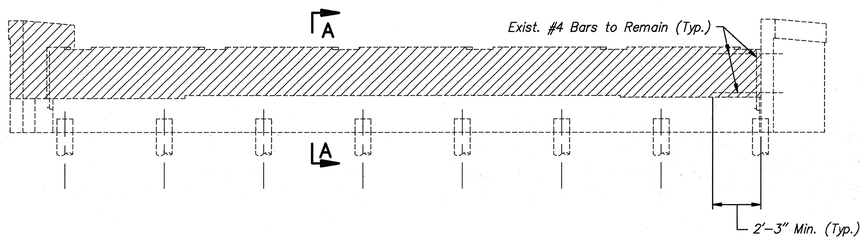

ELEVATION – BENT 1 (EASTBOUND)

Scale: 3/16"=1'-0"

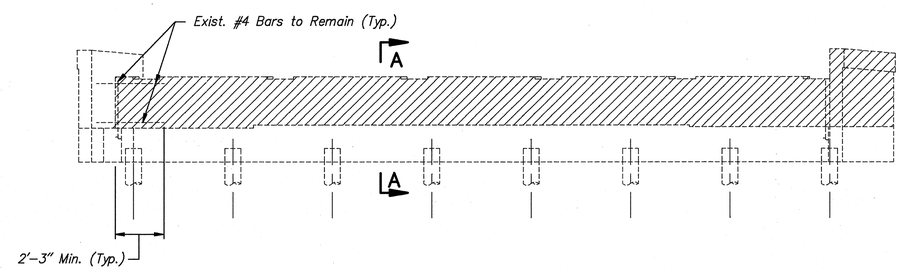

ELEVATION – BENT 4 (EASTBOUND)

Scale: 3/16"=1'-0"

NOTES:

1. Denotes Portions to be Removed.
2. All Removal will be Paid for as "Removal of Present Structure Portions, Str. No. 4", LSUM.
3. Existing Structural Steel and Existing Slab Not Shown for Clarity.
4. See Sheet 22 for Sections.

BENT 1 & 4 DEMOLITION DETAILS

INDIANA DEPARTMENT OF TRANSPORTATION

HENRY COUNTY

SCALE: – AS NOTED DATE: – AUGUST, 1994

DRAWING: – S20 OF 48 SHEET: – 21 OF 57

PROJECT: –IM/70–4 (064) STATION: –

BRIDGE CONTRACT NO. R–21474

BRIDGE FILE: – I–70–115–5140B & I–70–115–5140JB

FARID PEZESHK REGISTERED No. 890147 STATE OF INDIANA PROFESSIONAL ENGINEER 8-30-94

DRAWN	Jim	C'K'D	LMK
DESIGNED	LMK	C'K'D	MAK
TRACED		C'K'D	

JOB NAME: I-70 EAST OF S.R.9 (BRIDGE #5140)
JOB #: 9361220400
CAD FILENAME: C:\A\9320481.DWG
LAST REVISION DATE: 08/12/94
OPERATOR'S INITIALS: JLM

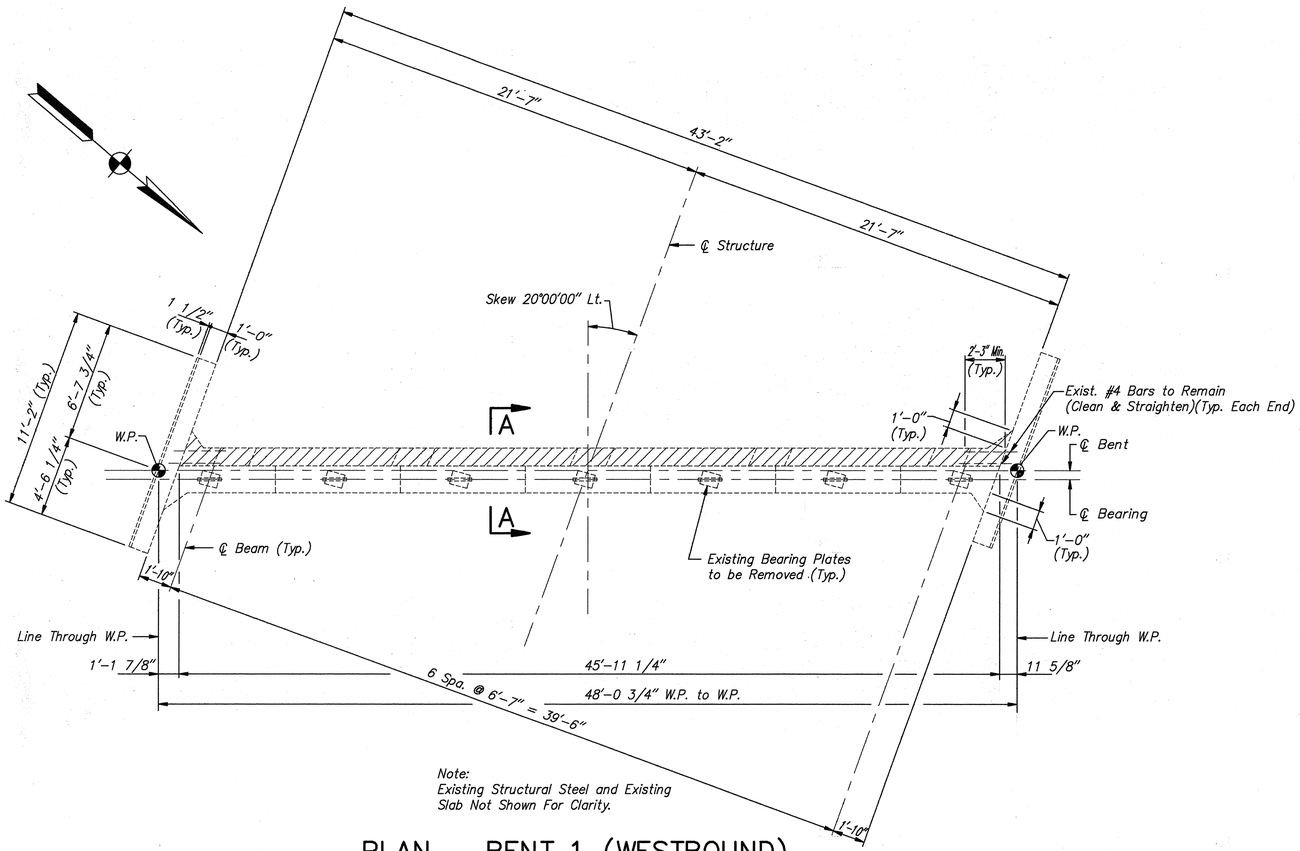

Note:
Existing Structural Steel and Existing Slab Not Shown For Clarity.

PLAN – BENT 1 (WESTBOUND)

Similar @ Bent 4 (Westbound)
Scale: 1/4"=1'-0"

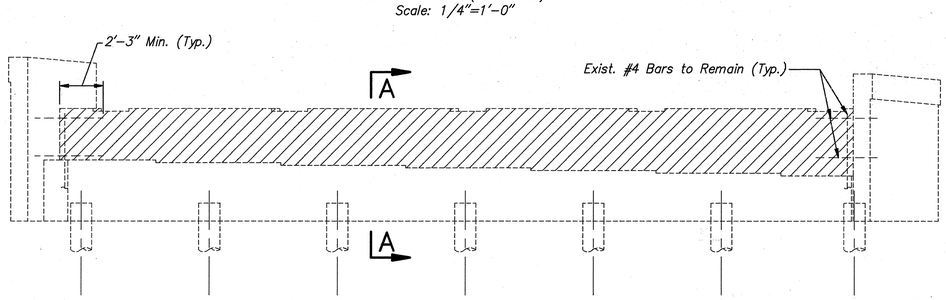

Note:
Existing Structural Steel and Existing Slab Not Shown For Clarity.

ELEVATION – BENT 1 (WESTBOUND)

Similar @ Bent 4 (Westbound)
Scale: 1/4"=1'-0"

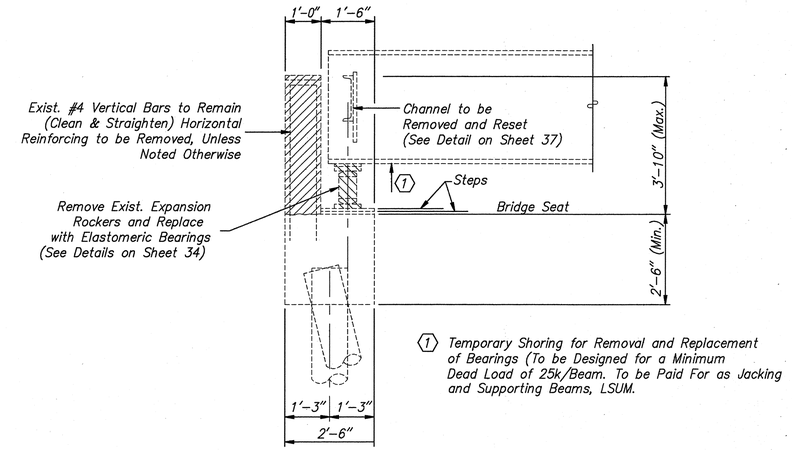

1 Temporary Shoring for Removal and Replacement of Bearings (To be Designed for a Minimum Dead Load of 25k/Beam. To be Paid For as Jacking and Supporting Beams, LSUM.

Note:
Existing Structural Slab and Existing Approach Slab Not Shown for Clarity.

SECTION A–A

Scale: 1/2" = 1'-0"

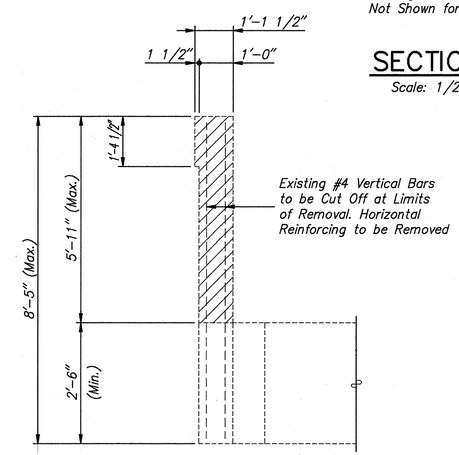

SECTION B–B

Scale: 1/2" = 1'-0"

NOTES:

1. Denotes Portions to be Removed.
2. All Removal will be Paid for as "Removal of Present Structure Portions, Str. No. 4", LSUM.

BENT 1 & 4 DEMOLITION DETAILS
INDIANA DEPARTMENT OF TRANSPORTATION

HENRY COUNTY

SCALE: – AS NOTED DATE: – AUGUST, 1994

DRAWING: – S21 OF 48 SHEET: – 22 OF 57
PROJECT: –IM/70–4 (064) STATION: –
BRIDGE CONTRACT NO. R–21474
BRIDGE FILE: – I–70–115–5140B & I–70–115–5140JB

FARID PEZESHK REGISTERED No. 890147 STATE OF INDIANA PROFESSIONAL ENGINEER 8-30-94

DRAWN	JLM	C'K'D	LMK
DESIGNED	LMK	C'K'D	MAK
TRACED		C'K'D	

JOB NAME: I-70 EAST OF S.R.9 (BRIDGE #5140)
JOb #9361220400
CAD FILENAME: C:\51405\9320482.DWG
LAST REVISION DATE: 8/30/94
OPERATORS INITIALS: BJS

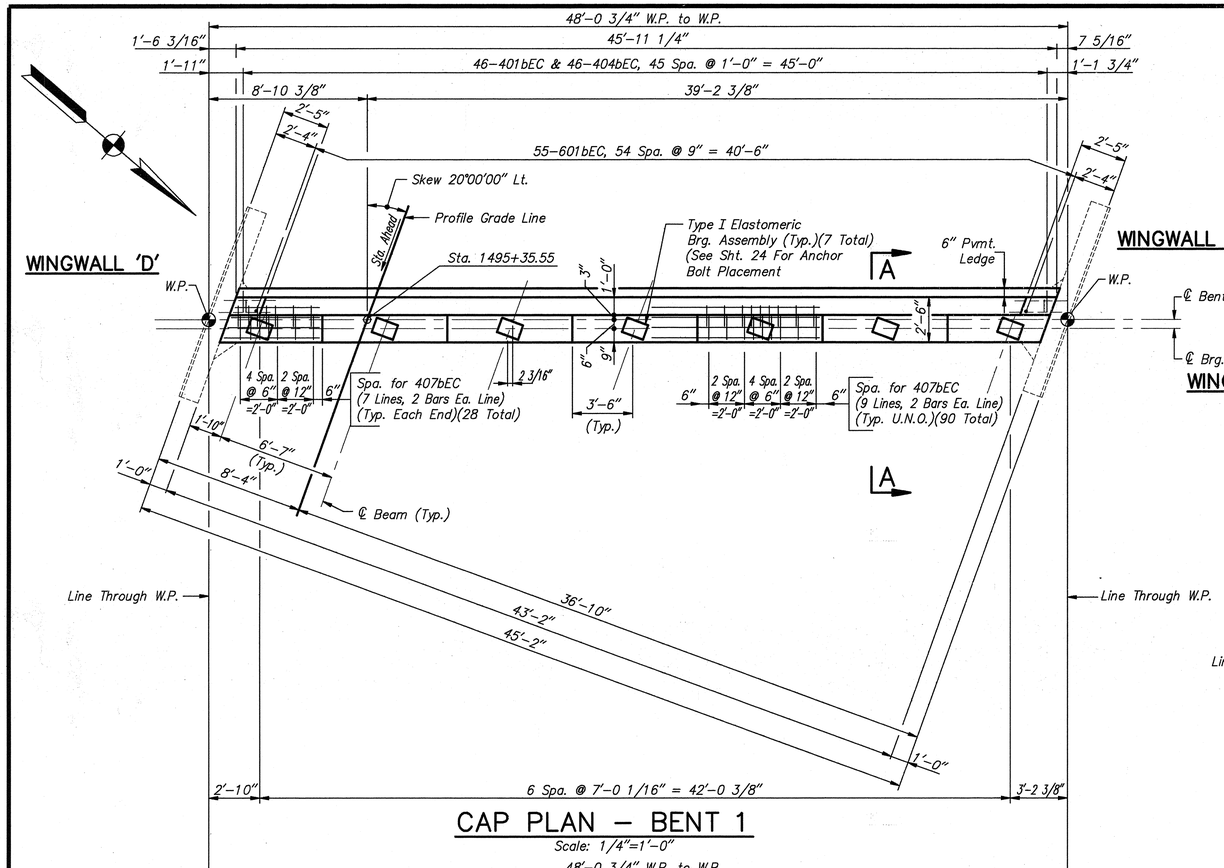

CAP PLAN – BENT 1

Scale: 1/4"=1'-0"

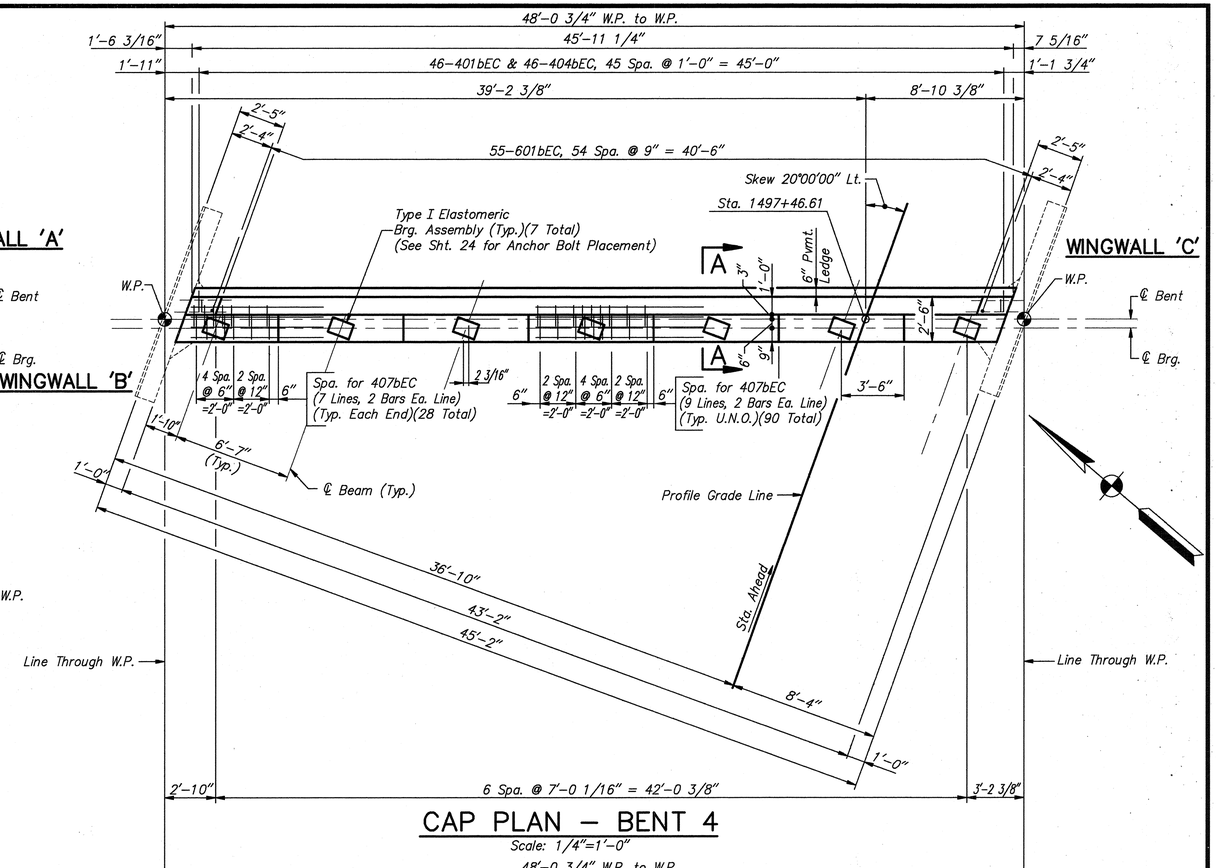

CAP PLAN – BENT 4

Scale: 1/4"=1'-0"

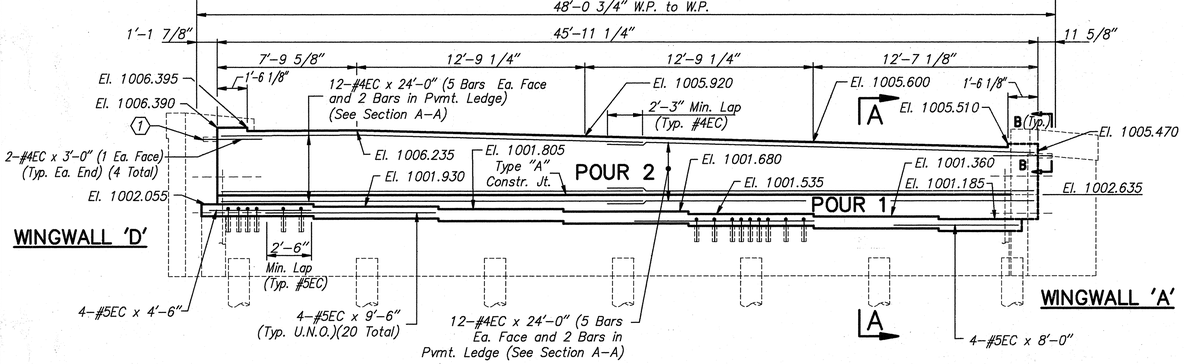

ELEVATION – BENT 1

Scale: 1/4"=1'-0"

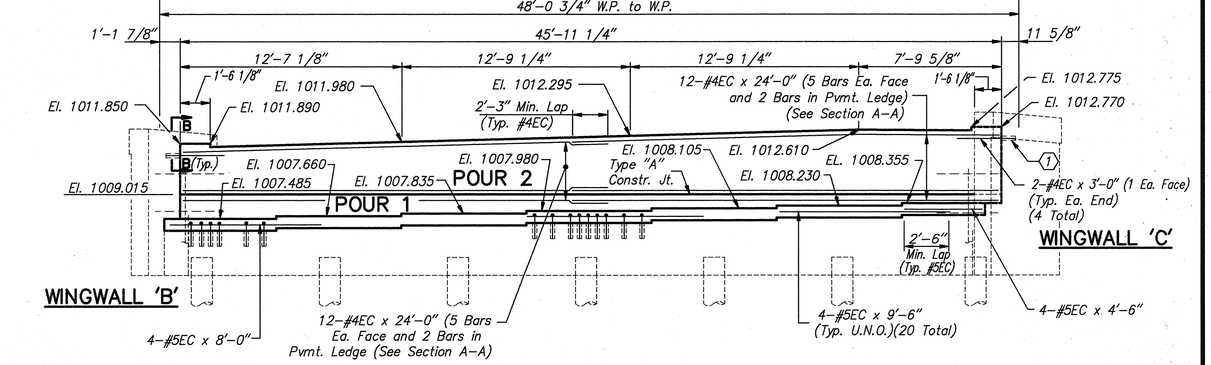

ELEVATION – BENT 4

Scale: 1/4"=1'-0"

KEYNOTES:

1. 2 Field Drilled Holes in Concrete (1 Ea. Face) Embed Bar 6" with an Approved Anchor System Min. Pullout = 12,000 Lbs. (Typ. Ea. End)(4 Total)

NOTES:

1. For General Notes see Sheet 19.
2. See Br. Std. C1 for Reinforcing Bar Notes.
3. See Br. Std. C3 for Type 'A' Construction Joints.
4. See Sheet 27 for Bar Bends and Bill of Materials.
5. Holes for Anchor Bolts Shall be Drilled.
6. Anchor Bolts Shall be Set in Non-Shrinking Grout or Epoxy Grout.

BENT 1 & 4 (WESTBOUND)

INDIANA DEPARTMENT OF TRANSPORTATION

HENRY COUNTY

SCALE: – AS NOTED DATE: – AUGUST, 1994

DRAWING: – S22 OF 48 SHEET: – 23 OF 57

PROJECT: –IM/70-4 (064) STATION: –

BRIDGE CONTRACT NO. R-21474

BRIDGE FILE: – I-70-115-5140B & I-70-115-5140JB

FARID PEZESHK REGISTERED No. 890147 STATE OF INDIANA PROFESSIONAL ENGINEER 6-30-94

DRAWN	Jim	C'K'D	AWE
DESIGNED	AWE	C'K'D	MAK
TRACED		C'K'D	

JOB NAME: I-70 EAST OF S.R.9 (BRIDGE #5140)
JOB #: 9361220400
CAD FILENAME: C:\103204674.DWG
LAST REVISION DATE: 06/14/94
OPERATORS INITIALS: JLM

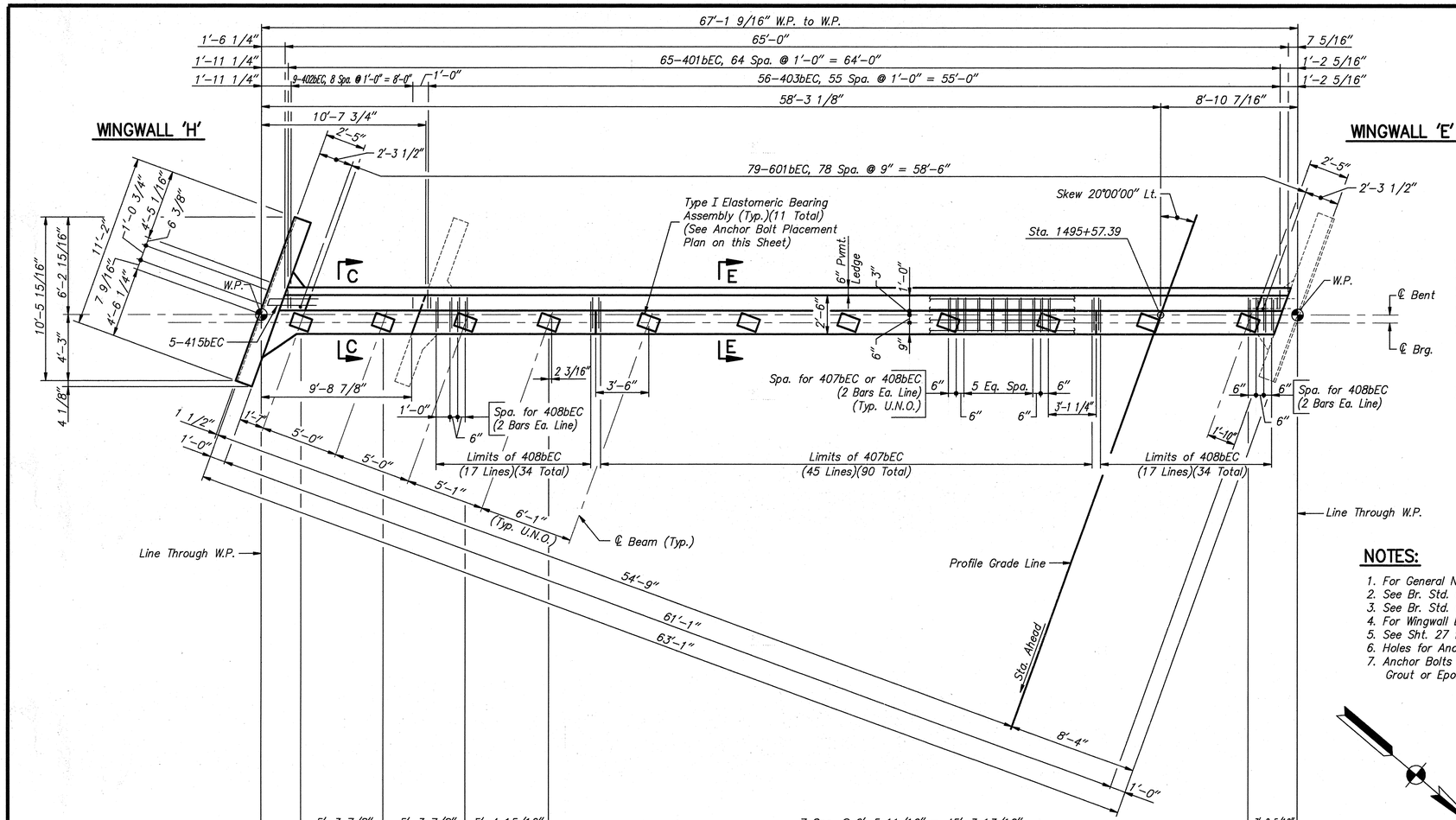

CAP PLAN

Scale: 1/4"=1'-0"

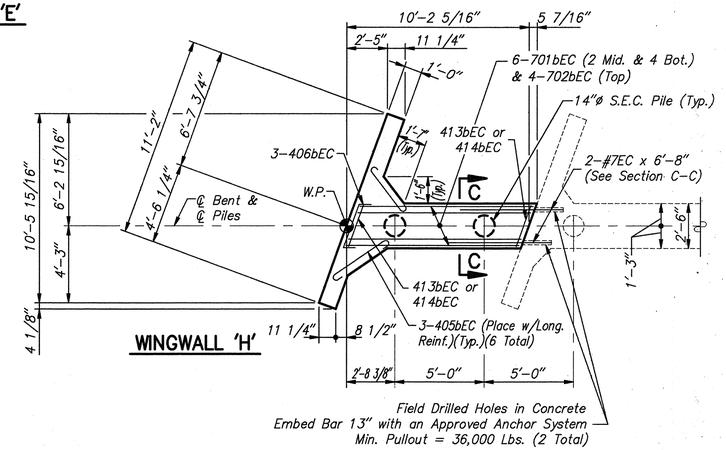

FOOTING PLAN

Scale: 1/4"=1'-0"

NOTES:

1. For General Notes see Sht. 19.
2. See Br. Std. C1 for Reinforcing Bar Notes.
3. See Br. Std. C3 for Type 'A' Construction Joints.
4. For Wingwall Elevations and Sections see Sht. 26.
5. See Sht. 27 for Bar Bends & Bill of Materials.
6. Holes for Anchor Bolts Shall be Drilled.
7. Anchor Bolts Shall be Set in Non-Shrinking Grout or Epoxy Grout.

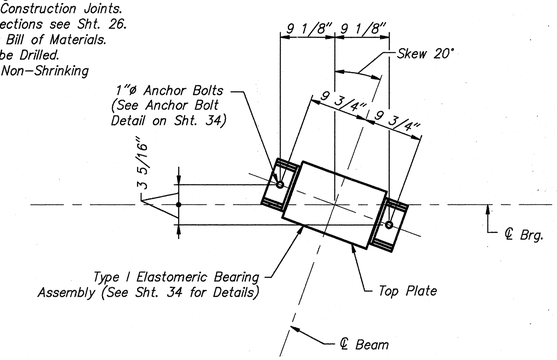

ANCHOR BOLT PLACEMENT PLAN

Scale: 1"=1'-0"

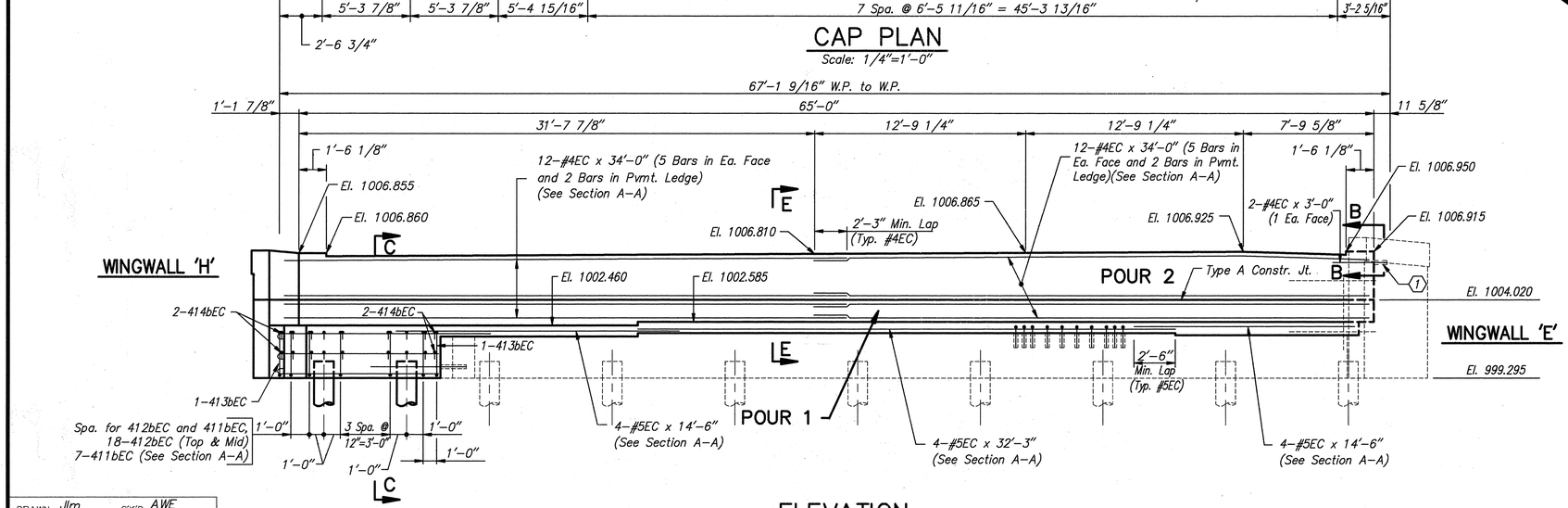

ELEVATION

Scale: 1/4"=1'-0"

KEYNOTES:

1. 2 Field Drilled Holes in Concrete (1 Ea. Face) Embed Bar 6" with an Approved Anchor System Min. Pullout = 12,000 Lbs. (2 Total)

BENT 1 (EASTBOUND)
INDIANA DEPARTMENT OF TRANSPORTATION

HENRY COUNTY

SCALE: - AS NOTED DATE: - AUGUST, 1994

DRAWING: - S23 OF 48 SHEET: - 24 OF 57

PROJECT: - IM/70-4 (064) STATION: -

BRIDGE CONTRACT NO. R-21474

BRIDGE FILE: - I-70-115-5140B & I-70-115-5140JB

FARID PEZESHK REGISTERED No. 89947 STATE OF INDIANA PROFESSIONAL ENGINEER 8-30-94

DRAWN Jim	C'K'D AWE		
DESIGNED AWE	C'K'D MAK		
TRACED	C'K'D		

JOB NAME: I-70 EAST OF S.R.9 (BRIDGE #5140)
JOB #9361220400
CAD FILENAME: C:\V3520485.DWG
LAST REVISION DATE: 08/31/94
OPERATORS INITIALS: JLM

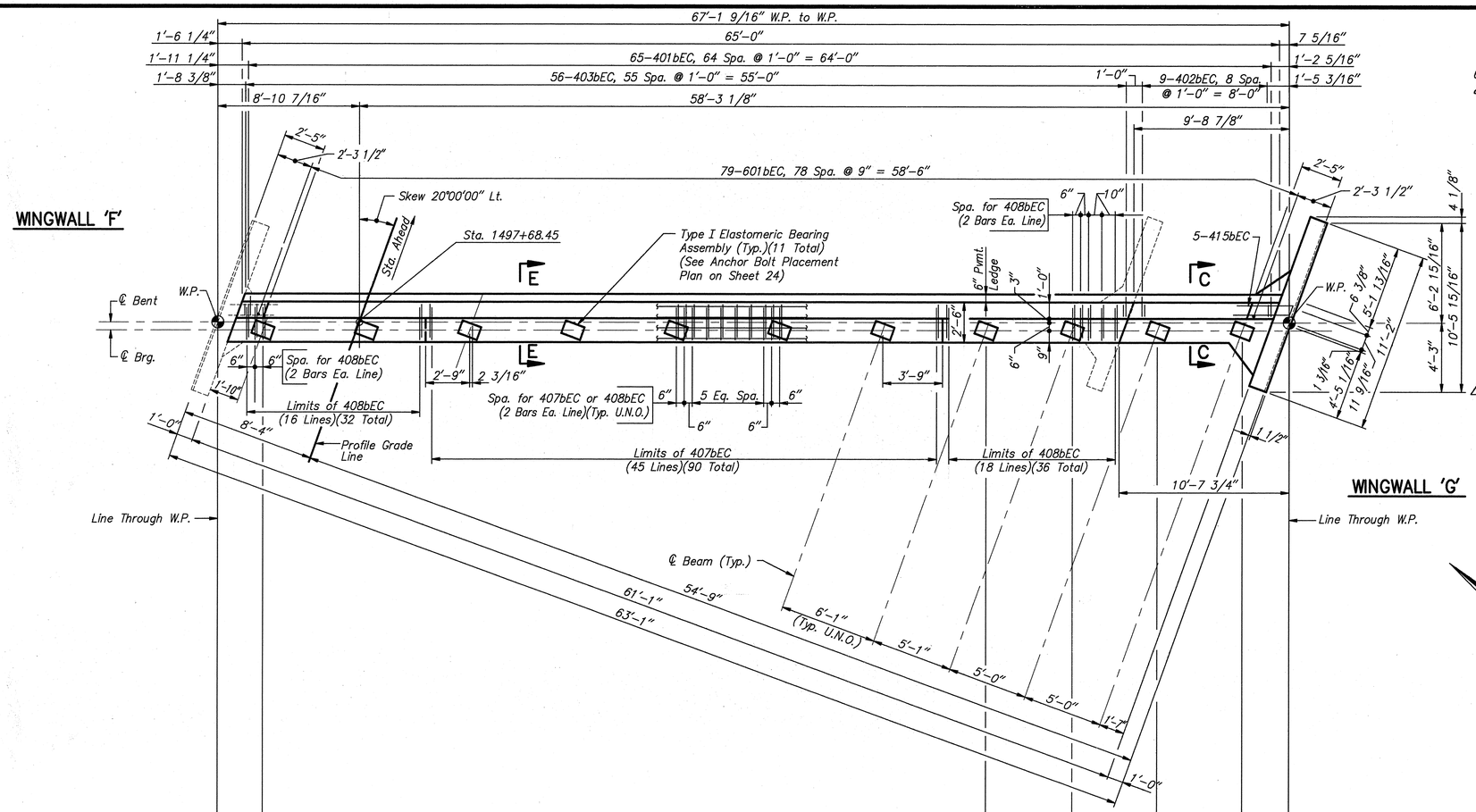

CAP PLAN

Scale: 1/4"=1'-0"

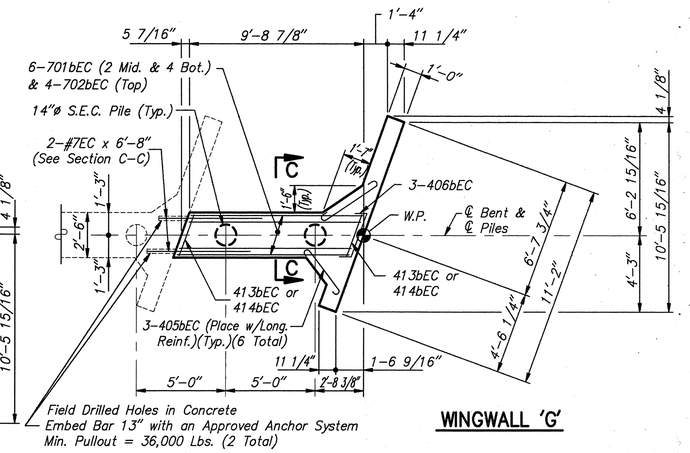

FOOTING PLAN

Scale: 1/4"=1'-0"

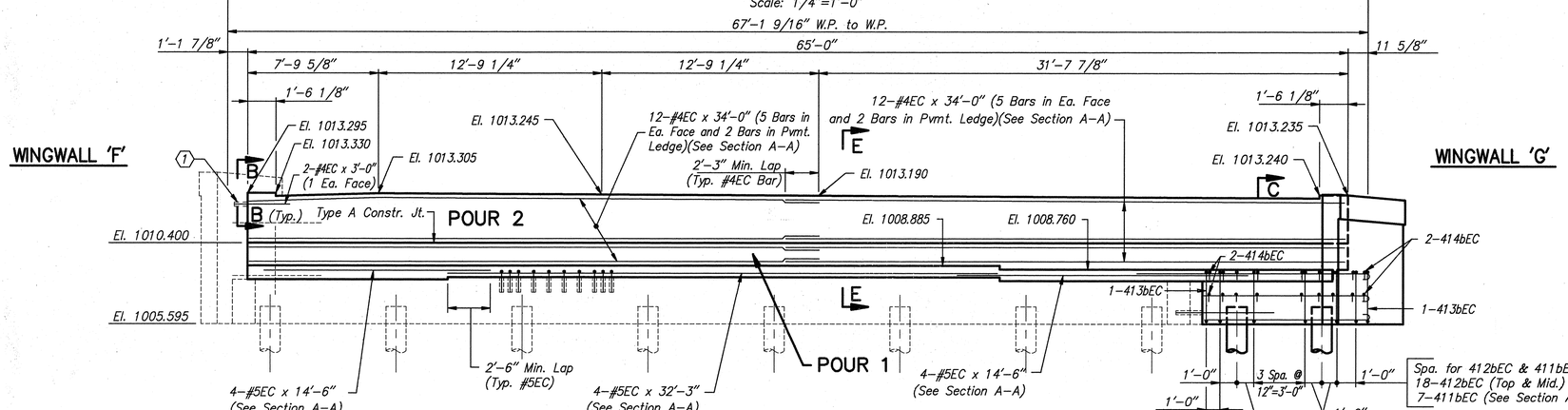

ELEVATION

Scale: 1/4"=1'-0"

NOTES:

1. For General Notes see Sht. 19.
2. See Br. Std. C1 for Reinforcing Bar Notes.
3. See Br. Std. C3 for Type 'A' Construction Joints.
4. For Wingwall Elevations and Sections see Sht. 26.
5. See Sht. 27 for Bar Bends & Bill of Materials.
6. Holes for Anchor Bolts Shall be Drilled.
7. Anchor Bolts Shall be Set in Non-Shrinking Grout or Epoxy Grout.

KEYNOTES:

(1) 2 Field Drilled Holes in Concrete (1 Ea. Face) Embed Bar 6" with an Approved Anchor System Min. Pullout = 12,000 Lbs. (2 Total)

BENT 4 (EASTBOUND)
INDIANA DEPARTMENT OF TRANSPORTATION

HENRY COUNTY

SCALE: - AS NOTED DATE: - AUGUST, 1994

DRAWING: - S24 OF 48 SHEET: - 25 OF 57

PROJECT: - IM/70-4 (064) STATION: -

BRIDGE CONTRACT NO. R-21474

BRIDGE FILE: - I-70-115-5140B & I-70-115-5140JB

FARID PETESHK REGISTERED No. 890147 STATE OF INDIANA PROFESSIONAL ENGINEER 8-30-94

DRAWN	Jlm	C'K'D	AWE
DESIGNED	AWE	C'K'D	MAK
TRACED		C'K'D	

JOB NAME: I-70 EAST OF S.R.9 (BRIDGE #5140)
JOB # 9361220400
CAD FILENAME: C:\N\9320487T.DWG
LAST REVISED DATE: 94/04/04
OPERATORS INITIALS: JLM

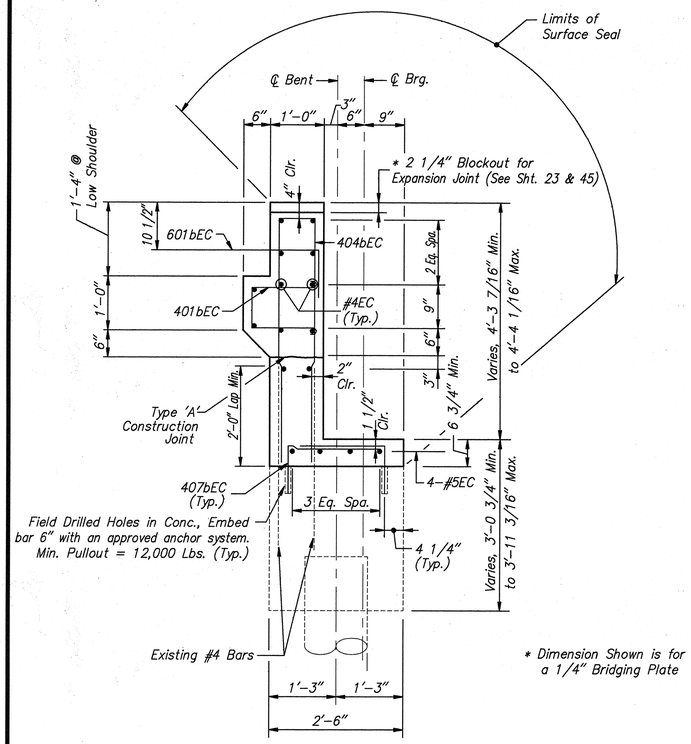

SECTION A-A

Scale: 3/4" = 1'-0"

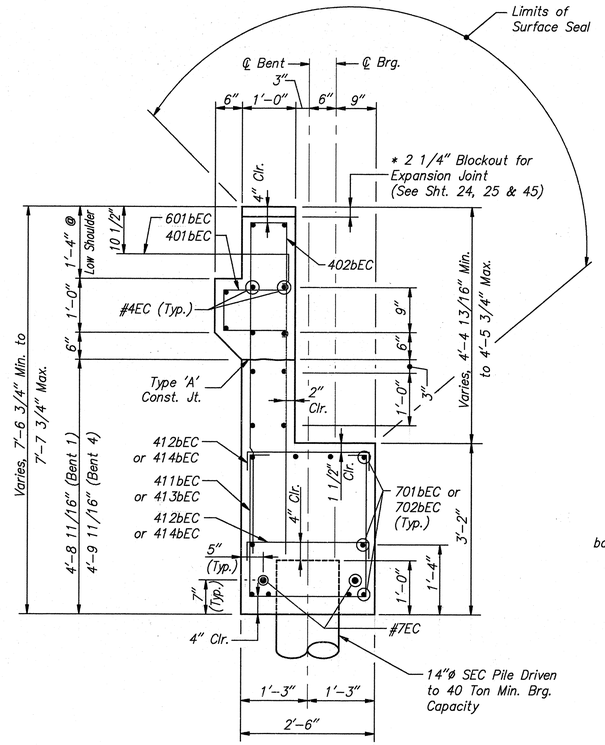

SECTION C-C

Scale: 3/4" = 1'-0"

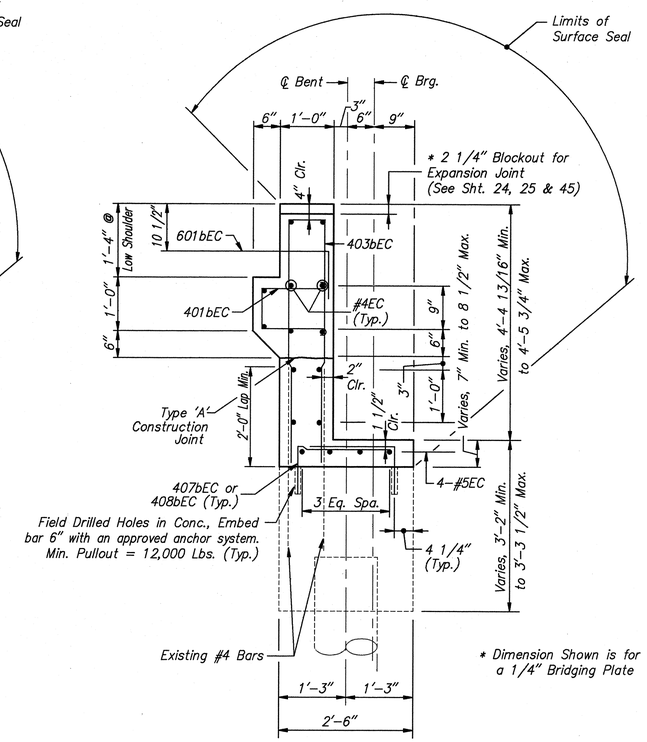

SECTION E-E

Scale: 3/4" = 1'-0"

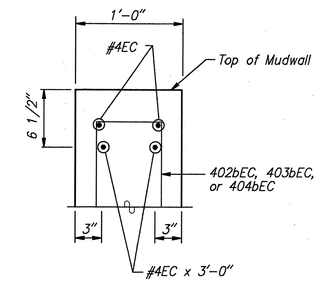

SECTION B-B

Scale: 1 1/2" = 1'-0"

NOTES:

1. See Bridge Standard C1 For Reinforcing Bar Notes.
2. See Bridge Standard C3 For Type 'A' Construction Joint.
3. For Additional Notes and Details See Sheet 23 thru 25.

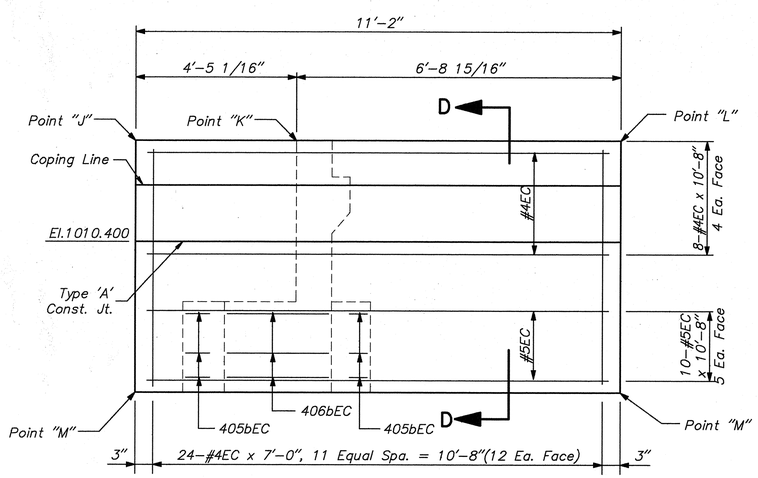

ELEVATION WINGWALL "G"

Scale: None

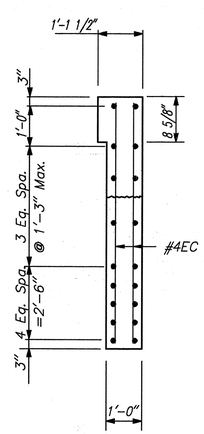

SECTION D-D

Scale: None

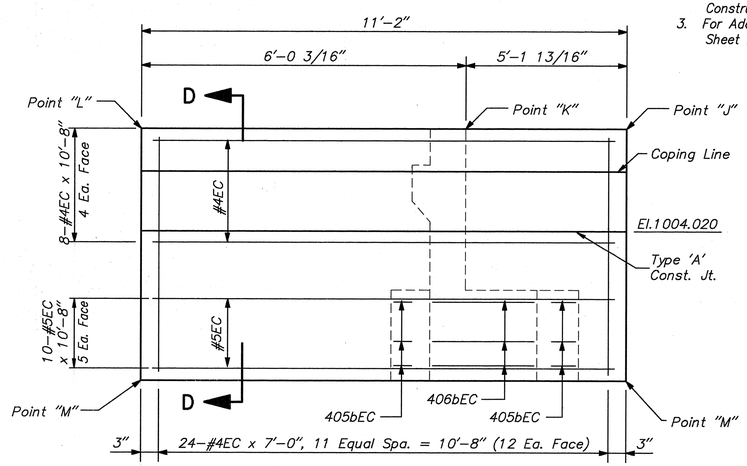

ELEVATION WINGWALL "H"

Scale: None

Point / Wing	"J"	"K"	"L"	"M"
Wing H	1007.025	1006.855	1006.690	999.295
Wing G	1013.085	1013.235	1013.420	1005.595

WINGWALL ELEVATION TABLE

BENT 1 & 4 DETAILS
INDIANA DEPARTMENT OF TRANSPORTATION

HENRY COUNTY

SCALE: - AS NOTED DATE: - AUGUST, 1994

DRAWING: - S25 OF 48 SHEET: - 26 OF 57

PROJECT: - IM/70-4 (064) STATION: -

BRIDGE CONTRACT NO. R-21474

BRIDGE FILE: - I-70-115-5140B & I-70-115-5140JB

FARID PEZESHK REGISTERED No. 890147 STATE OF INDIANA PROFESSIONAL ENGINEER

DRAWN	Jlm	C'K'D	AWE
DESIGNED	AWE	C'K'D	MAK
TRACED		C'K'D	

JOB NAME: I-70 EAST OF S.R.9 (BRIDGE #5140)
JOB # 9361220400
JOB FILENAME: C:\9361220400\S25BRTB.DWG
LAST REVISED DATE: 08/15/94
OPERATORS INITIALS: JLM

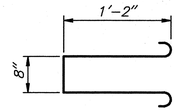

401bEC x 4'-0"

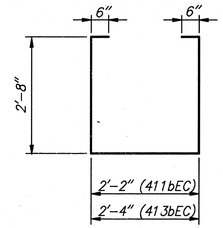

411bEC x 8'-6"
413bEC x 8'-8"

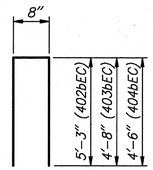

402bEC x 11'-2"
403bEC x 10'-0"
404bEC x 9'-8"

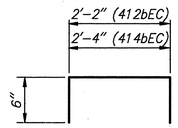

412bEC x 3'-2"
414bEC x 3'-4"

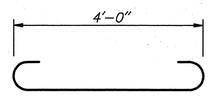

405bEC x 5'-0"

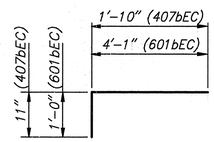

407bEC x 2'-9"
601bEC x 5'-1"

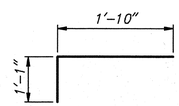

408bEC x 2'-11"

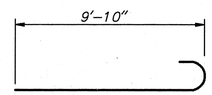

701bEC x 10'-8"

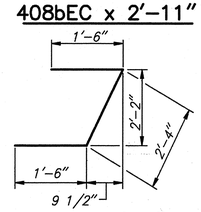

406bEC x 5'-4"

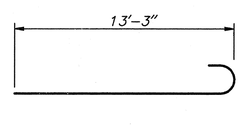

702bEC x 14'-1"

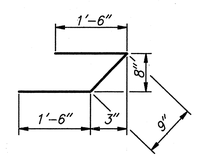

415bEC x 3'-9"

BILL OF MATERIALS BENT 1 (WESTBOUND)

EPOXY COATED REINF. STL.

MARK / SIZE	NO. REQ'D	LENGTH	WEIGHT (LBS)
601bEC	55	5'-1"	
Total #6EC			420
#5EC	20	9'-6"	
#5EC	4	8'-0"	
#5EC	4	4'-6"	
Total #5EC			250
401bEC	46	4'-0"	
404bEC	46	9'-8"	
407bEC	118	2'-9"	
#4EC	24	24'-0"	
#4EC	4	3'-0"	
Total #4EC			1,029
Total Epoxy Coated Reinf. Stl.			1,699

CONCRETE

Location	CYS
Class "A" Concrete	
Pour 1	4.1
Total Class "A" Concrete	4.1
Class "C" Concrete	
Pour 2	6.6
Total Class "C" Concrete	6.6

MISC.

Surface Seal (Est.)	318 SFT
Field Drilled Holes in Concrete	122 EA
Type I Elastomeric Brg. Assembly	7 EA

BILL OF MATERIALS BENT 4 (WESTBOUND)

EPOXY COATED REINF. STL.

MARK / SIZE	NO. REQ'D	LENGTH	WEIGHT (LBS)
601bEC	55	5'-1"	
Total #6EC			420
#5EC	20	9'-6"	
#5EC	4	8'-0"	
#5EC	4	4'-6"	
Total #5EC			250
401bEC	46	4'-0"	
404bEC	46	9'-8"	
407bEC	118	2'-9"	
#4EC	24	24'-0"	
#4EC	4	3'-0"	
Total #4EC			1,029
Total Epoxy Coated Reinf. Stl.			1,699

CONCRETE

Location	CYS
Class "A" Concrete	
Pour 1	4.1
Total Class "A" Concrete	4.1
Class "C" Concrete	
Pour 2	6.6
Total Class "C" Concrete	6.6

MISC.

Surface Seal (Est.)	318 SFT
Field Drilled Holes in Concrete	122 EA
Type I Elastomeric Brg. Assembly	7 EA

BILL OF MATERIALS BENT 1 (EASTBOUND)

EPOXY COATED REINF. STL.

MARK / SIZE	NO. REQ'D	LENGTH	WEIGHT (LBS)
701bEC	6	10'-8"	
702bEC	4	14'-1"	
#7EC	2	6'-8"	
Total #7EC			273
601bEC	79	5'-1"	
Total #6EC			603
#5EC	4	32'-3"	
#5EC	8	14'-6"	
#5EC	10	10'-8"	
Total #5EC			367
401bEC	65	4'-0"	
402bEC	9	11'-2"	
403bEC	56	10'-0"	
405bEC	6	5'-0"	
406bEC	3	5'-4"	
407bEC	90	2'-9"	
408bEC	68	2'-11"	
411bEC	7	8'-6"	
412bEC	18	3'-2"	
413bEC	2	8'-8"	
414bEC	4	3'-4"	
415bEC	5	3'-9"	
#4EC	24	34'-0"	
#4EC	8	10'-8"	
#4EC	24	7'-0"	
#4EC	2	3'-0"	
Total #4EC			1,773
Total Epoxy Coated Reinf. Stl.			3,016

CONCRETE

Location	CYS
Class "A" Concrete	
Pour 1	11.1
Total Class "A" Concrete	11.1
Class "C" Concrete	
Pour 2	9.5
Total Class "C" Concrete	9.5

MISC.

2-Piles, Concrete, Steel Shell Encased, 0.230 in. Shell Thickness 14 in. Diameter (32 LFT Avg. Length)	64 LFT
Surface Seal (Est.)	441 SFT
Field Drilled Holes in Concrete	162 EA
Type I Elastomeric Brg. Assembly	11 EA

BILL OF MATERIALS BENT 4 (EASTBOUND)

EPOXY COATED REINF. STL.

MARK / SIZE	NO. REQ'D	LENGTH	WEIGHT (LBS)
701bEC	6	10'-8"	
702bEC	4	14'-1"	
#7EC	2	6'-8"	
Total #7EC			273
601bEC	79	5'-1"	
Total #6EC			603
#5EC	4	32'-3"	
#5EC	8	14'-6"	
#5EC	10	10'-8"	
Total #5EC			367
401bEC	65	4'-0"	
402bEC	9	11'-2"	
403bEC	56	10'-0"	
405bEC	6	5'-0"	
406bEC	3	5'-4"	
407bEC	90	2'-9"	
408bEC	68	2'-11"	
411bEC	7	8'-6"	
412bEC	18	3'-2"	
413bEC	2	8'-8"	
414bEC	4	3'-4"	
415bEC	5	3'-9"	
#4EC	24	34'-0"	
#4EC	8	10'-8"	
#4EC	24	7'-0"	
#4EC	2	3'-0"	
Total #4EC			1,773
Total Epoxy Coated Reinf. Stl.			3,016

CONCRETE

Location	CYS
Class "A" Concrete	
Pour 1	11.1
Total Class "A" Concrete	11.1
Class "C" Concrete	
Pour 2	9.5
Total Class "C" Concrete	9.5

MISC.

2-Piles, Concrete, Steel Shell Encased, 0.230 in. Shell Thickness 14 in. Diameter (45 LFT Avg. Length)	90 LFT
Surface Seal (Est.)	441 SFT
Field Drilled Holes in Concrete	162 EA
Type I Elastomeric Brg. Assembly	11 EA

Note: See Bridge Standard C1 for Reinforcing Bar Notes.

BENT 1 & 4 DETAILS
INDIANA DEPARTMENT OF TRANSPORTATION

HENRY COUNTY

SCALE: - AS NOTED DATE: - AUGUST, 1994

DRAWING: - S26 OF 48 SHEET: - 27 OF 57

PROJECT: -IM/70-4 (064) STATION: -

BRIDGE CONTRACT NO. R-21474

BRIDGE FILE: - I-70-115-5140B & I-70-115-5140JB

FARID PEZESHK REGISTERED No. 90147 STATE OF INDIANA PROFESSIONAL ENGINEER 8-30-94

DRAWN Jim C'K'D AWE
DESIGNED AWE C'K'D MAK
TRACED C'K'D

JOB NAME: I-70 EAST OF S.R.9 (BRIDGE #5140)
JOB # 9361220400
CAD FILENAME: C:\SH45\932C24BT8.DWG
LAST PLOTTED DATE: 08/01/94
OPERATORS INITIALS: JLM

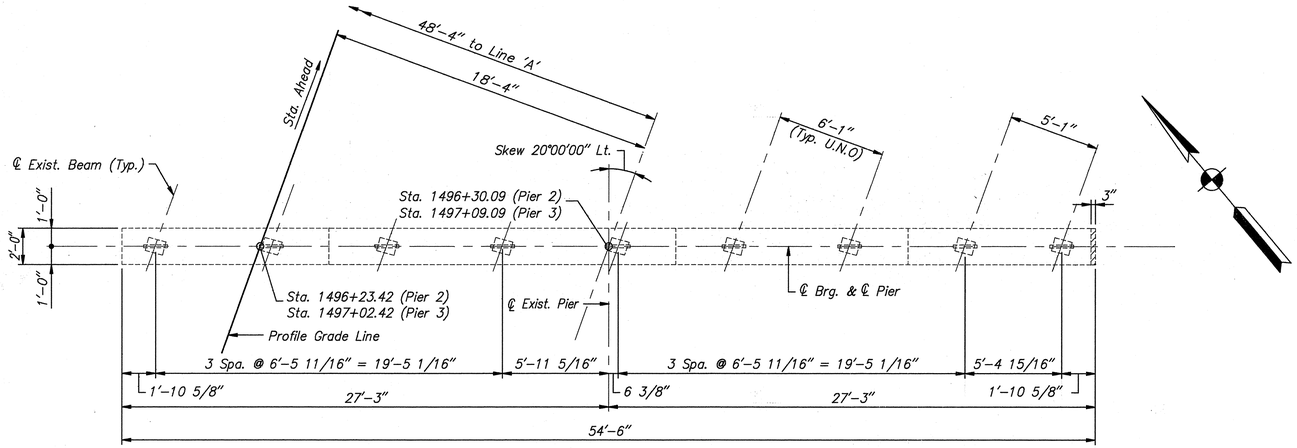

CAP PLAN – PIERS 2 & 3 (EASTBOUND)

Scale: 1/4"=1'-0"

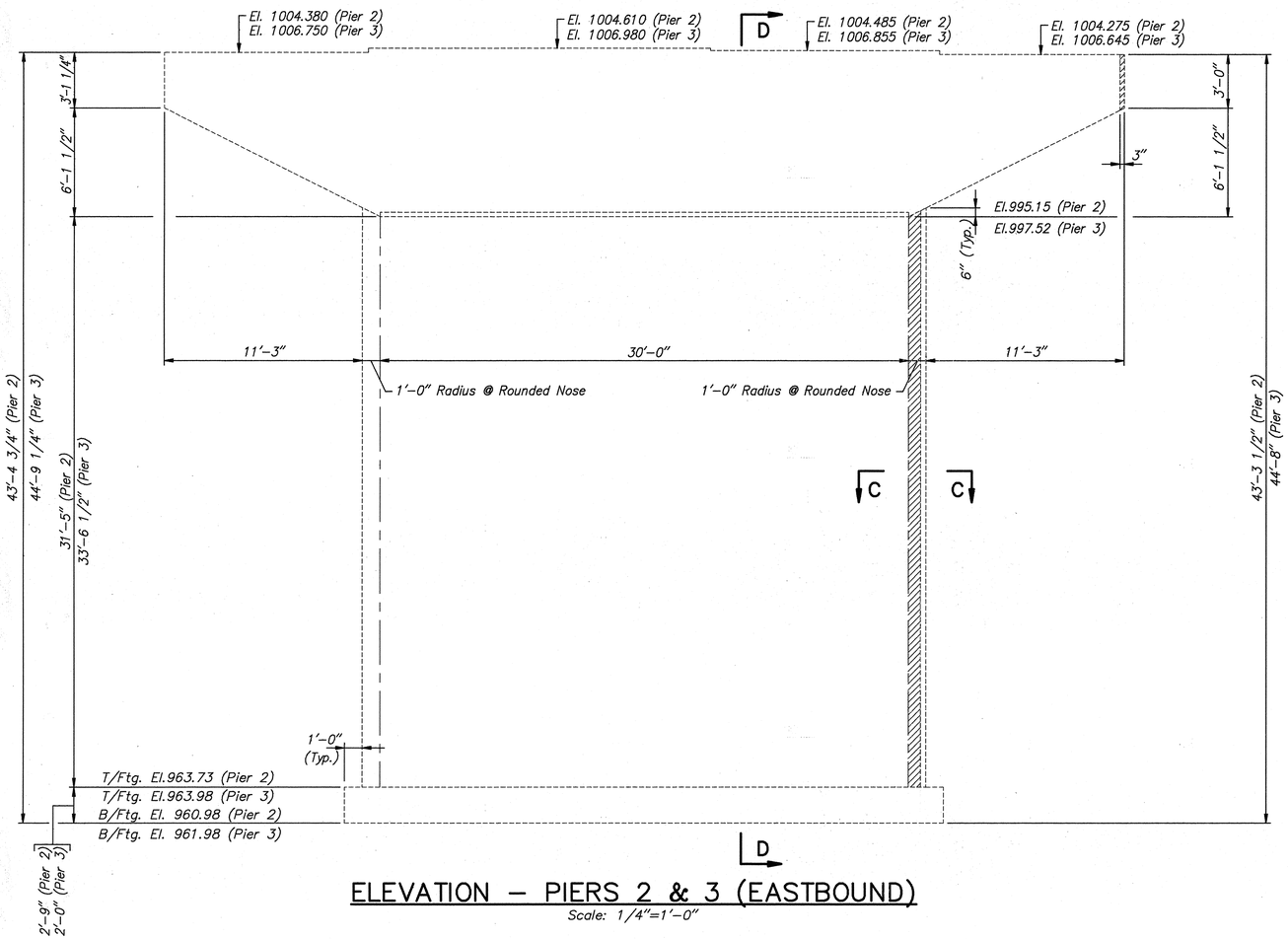

ELEVATION – PIERS 2 & 3 (EASTBOUND)

Scale: 1/4"=1'-0"

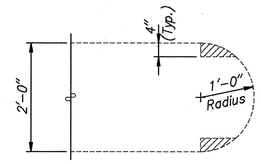

SECTION C–C

Scale: 3/4"=1'-0"

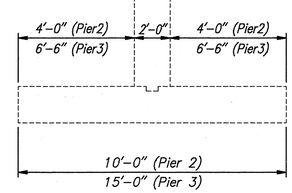

SECTION D–D

Scale: 1/4"=1'-0"

NOTES:

1. Denotes Portion to be Removed.
2. All Removal will be Paid for as "Removal of Present Structure Portions, Str. No. 4", LSUM.
3. Pier 2 (E.B.) is Founded on Timber Piles (Not Shown for Clarity). Pier 3 (E.B.) is a Spread Footing (Maximum Design Soil Pressure = 5140 Pounds per Square Foot)

DEMOLITION DETAILS
INDIANA DEPARTMENT OF TRANSPORTATION

HENRY COUNTY

SCALE: – AS NOTED DATE: – AUGUST, 1994

DRAWING: – S27 OF 48 SHEET: – 28 OF 57

PROJECT: – IM/70–4 (064) STATION: –

BRIDGE CONTRACT NO. R–21474

BRIDGE FILE: – I–70–115–5140B & I–70–115–5140JB

FARID PEZESHK REGISTERED No. 890147 STATE OF INDIANA PROFESSIONAL ENGINEER

8-30-94

DRAWN	Jlm	C'K'D	LMK
DESIGNED	LMK	C'K'D	MAK
TRACED		C'K'D	

JOB NAME: I-70 EAST OF S.R.9 (BRIDGE #5140)
JOB #:9361220400
CAD FILENAME: C:\5140\B3204P01.DWG
LAST REVISED DATE: 8/14/94
OPERATORS INITIALS: AJM

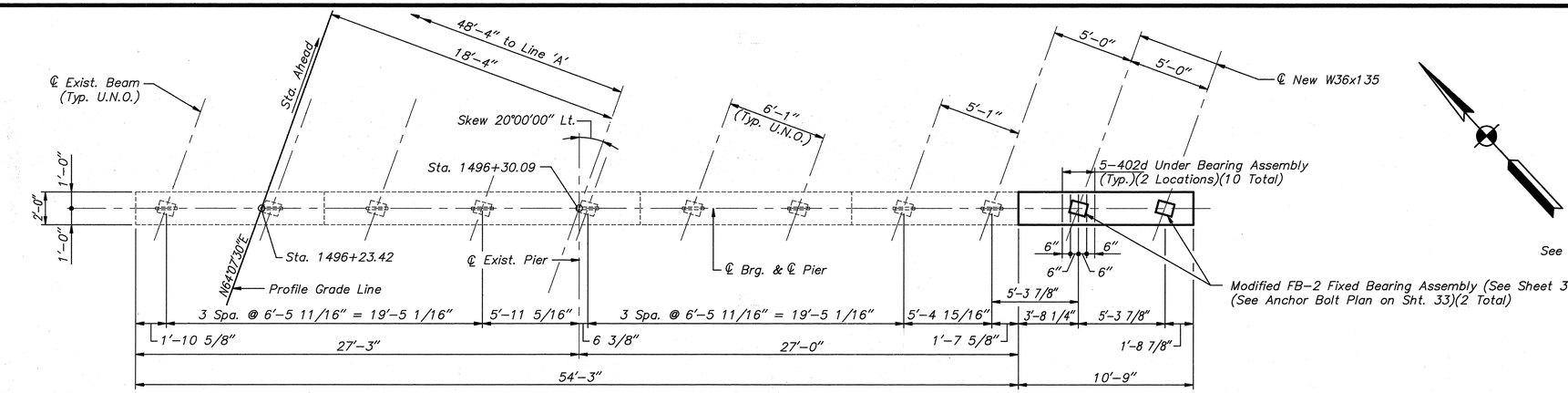

CAP PLAN

Scale: 1/4"=1'-0"

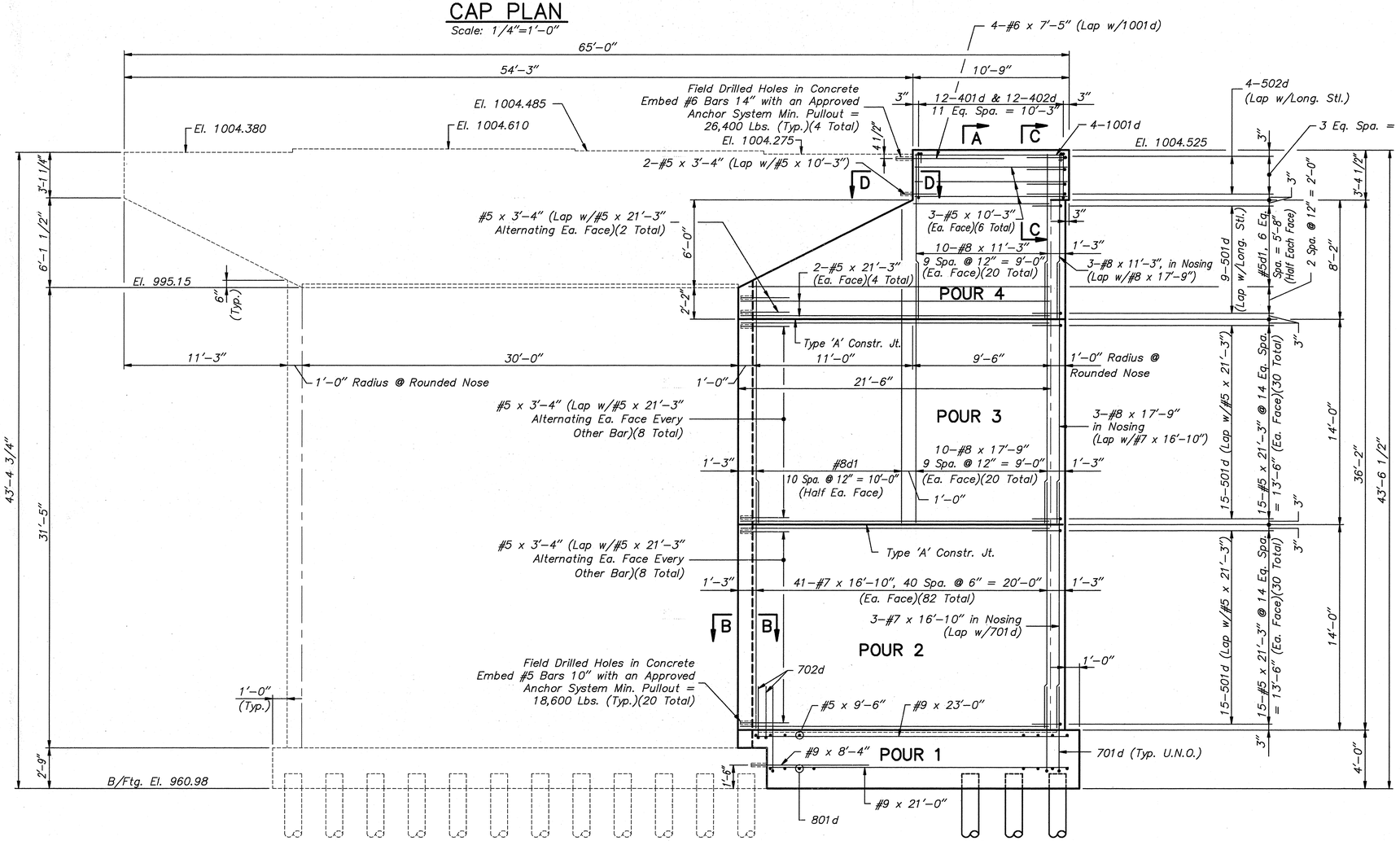

ELEVATION

Scale: 1/4"=1'-0" (Looking Upstation)

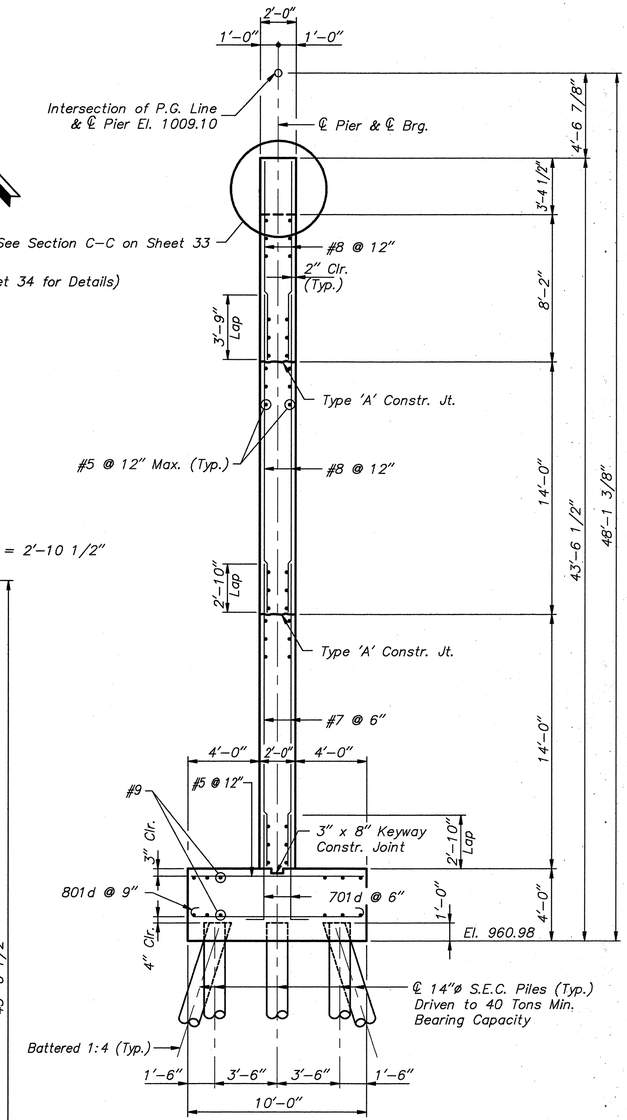

SECTION A-A

Scale: 1/4"=1'-0"

NOTE:

1. See Sheet 30 for Notes.

PIER 2 EASTBOUND
INDIANA DEPARTMENT OF TRANSPORTATION

HENRY COUNTY

SCALE: - AS NOTED DATE: - AUGUST, 1994

DRAWING: - S28 OF 48 SHEET: - 29 OF 57

PROJECT: -IM/70-4 (064) STATION: -

BRIDGE CONTRACT NO. R-21474

BRIDGE FILE: - I-70-115-5140B & I-70-115-5140JB

FARID PEZESHK REGISTERED No. 890147 STATE OF INDIANA PROFESSIONAL ENGINEER 8-30-94

DRAWN Jim C'K'D LMK
DESIGNED LMK C'K'D MAK
TRACED C'K'D

JOB NAME: I-70 EAST OF S.R.9 (BRIDGE #5140)
JOB #: 9361220400
CAD FILENAME: C:\5140\932040P02.DWG
LAST REVISION DATE: 08/14/94
OPERATOR'S INITIALS: JJM

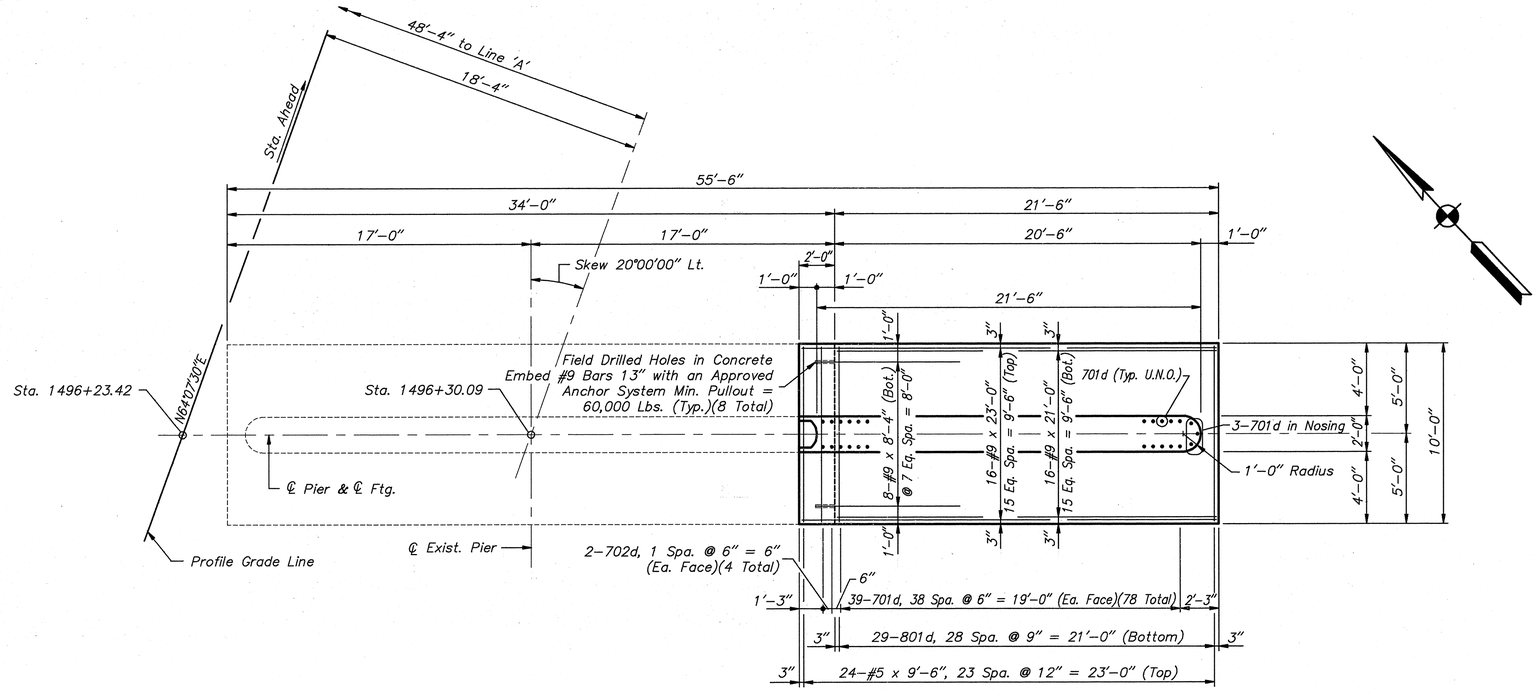

FOOTING PLAN

Scale: 1/4"=1'-0"

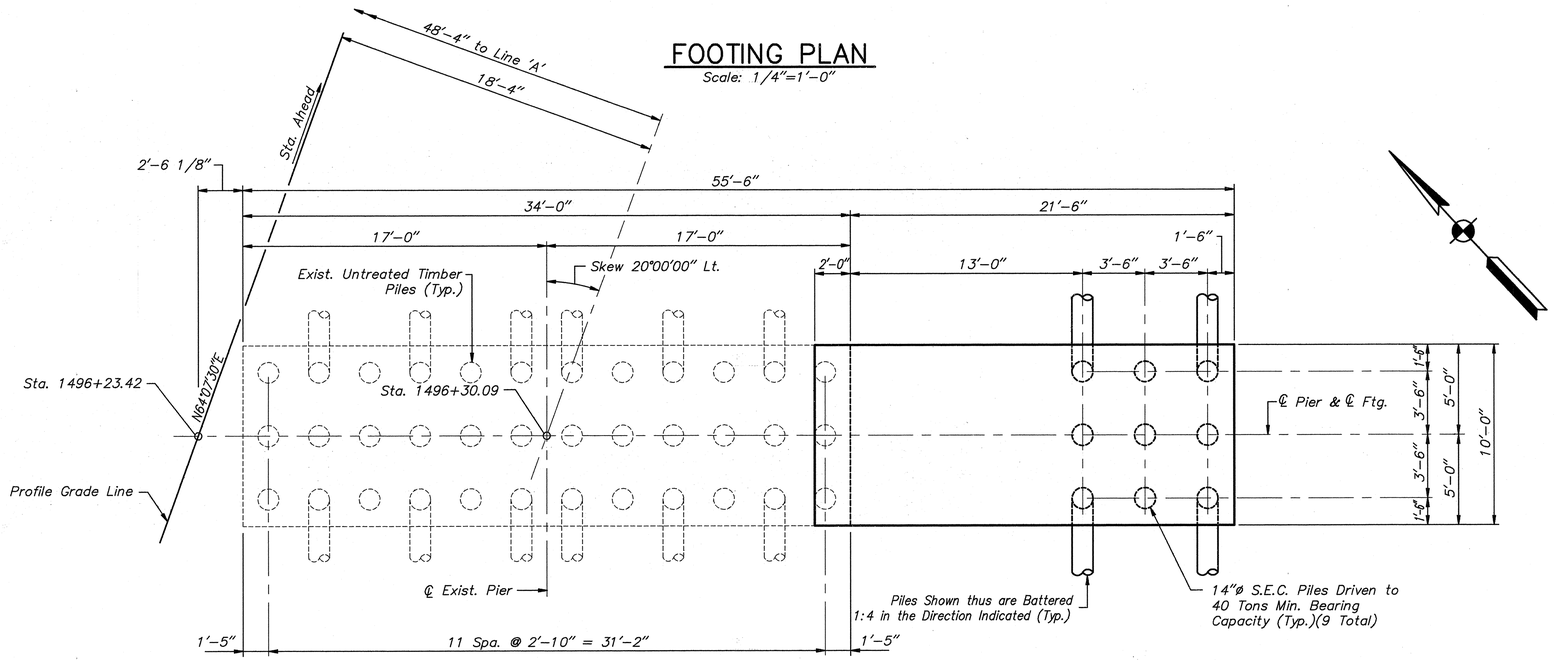

PILE PLAN

Scale: 1/4"=1'-0"

NOTES:

1. For General Notes see Sheet 19.
2. See Bridge Std. C1 for Reinforcing Bar Notes.
3. See Bridge Std. C3 for Type 'A' Construction Joint.
4. Anchor Bolts shall be Set in Non-Shrinking Grout or Epoxy Grout.
5. Holes for Anchor Bolts shall be Drilled.
6. For Bar Bends, Bill of Materials and Sections see Sheet 33.
7. After Piles are Driven and Prior to Placing Concrete, the Subgrade soil for the Pier Footing shall be Compacted to 100% of the Appropriate Maximum Dry Density. Cost to be Included in "Concrete, Class B in Footing"

PIER 2 EASTBOUND
INDIANA DEPARTMENT OF TRANSPORTATION

HENRY COUNTY

SCALE: - AS NOTED DATE: - AUGUST, 1994

FARID PEZESHK REGISTERED No. 890147 STATE OF INDIANA PROFESSIONAL ENGINEER 8.30.94

DRAWING: - S29 OF 48 SHEET: - 30 OF 57

PROJECT: - IM/70-4 (064) STATION: -

BRIDGE CONTRACT NO. R-21474

BRIDGE FILE: - I-70-115-5140B & I-70-115-5140JB

DRAWN	Jim	C'K'D	LMK
DESIGNED	LMK	C'K'D	MAK
TRACED		C'K'D	

JOB NAME: I-70 EAST OF S.R.9 (BRIDGE #5140)
JOB # 9361220400
CAD FILENAME: C:\9361204P04.DWG
LAST REVISION DATE: 08/31/94
OPERATORS INITIALS: JJB

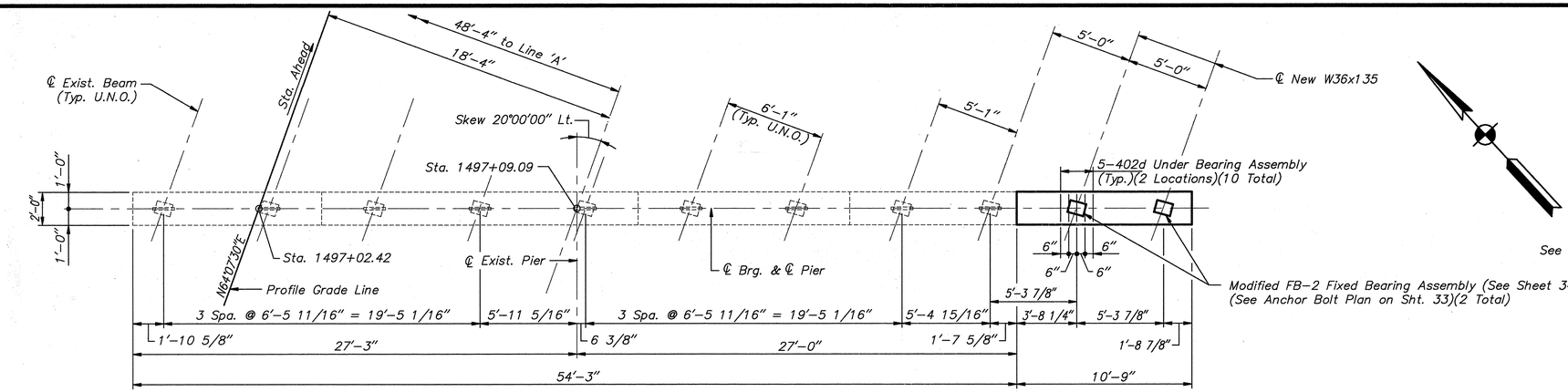

CAP PLAN

Scale: 1/4"=1'-0"

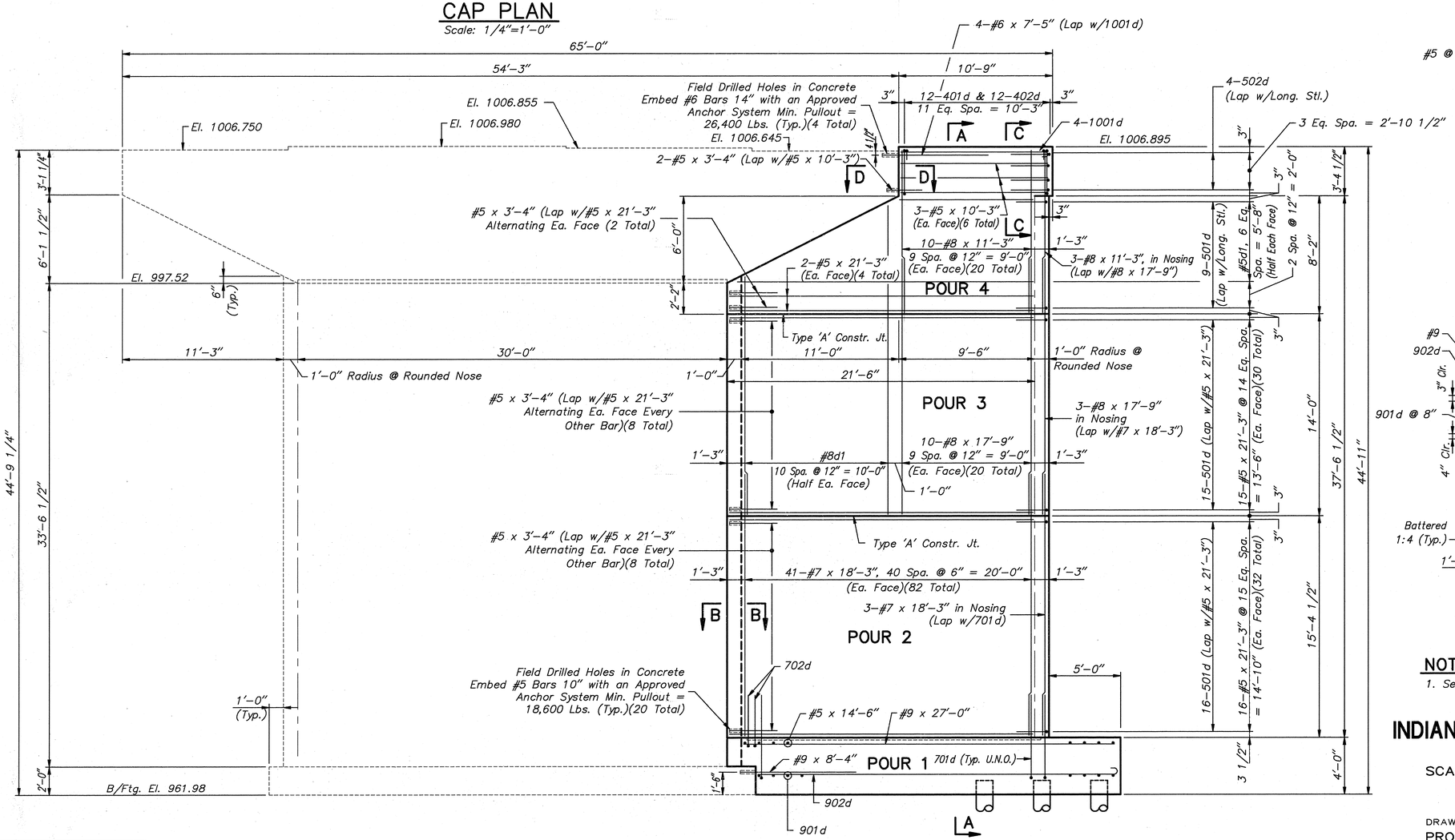

ELEVATION

Scale: 1/4"=1'-0" (Looking Upstation)

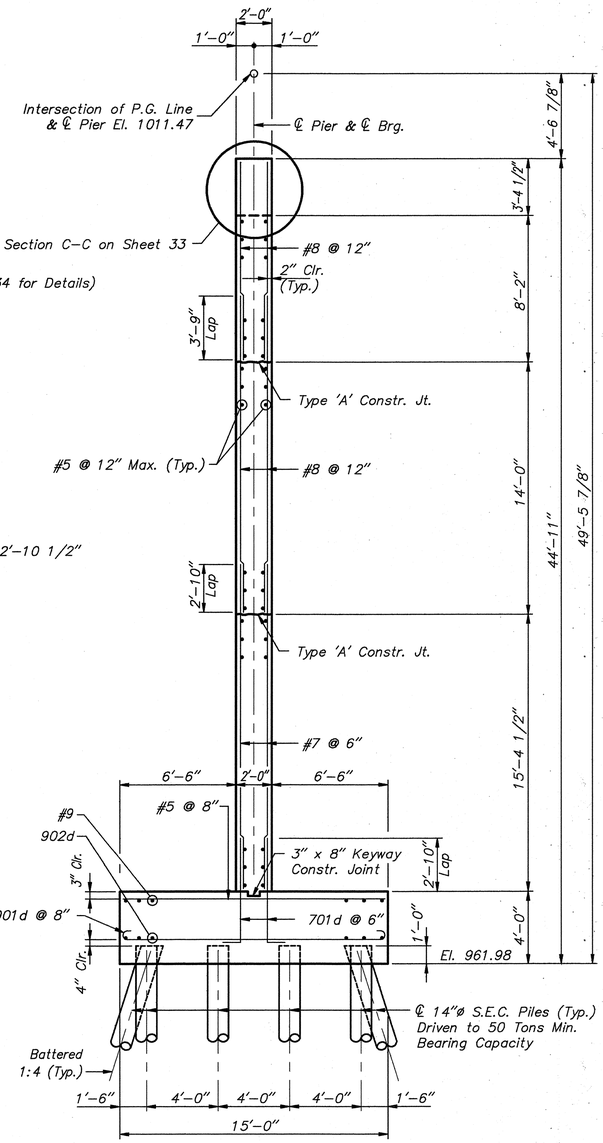

SECTION A-A

Scale: 1/4"=1'-0"

NOTE:

1. See Sheet 30 for Notes.

PIER 3 EASTBOUND

INDIANA DEPARTMENT OF TRANSPORTATION

HENRY COUNTY

SCALE: - AS NOTED DATE: - AUGUST, 1994

FARID PEZESHK REGISTERED No. 890147 STATE OF INDIANA PROFESSIONAL ENGINEER 8-30-94

DRAWING: - S30 OF 48 SHEET: - 31 OF 57

PROJECT: - IM/70-4 (064) STATION: -

BRIDGE CONTRACT NO. R-21474

BRIDGE FILE: - I-70-115-5140B & I-70-115-5140JB

DRAWN	Jlm	C'K'D	LMK
DESIGNED	LMK	C'K'D	MAK
TRACED		C'K'D	

JOB NAME: I-70 EAST OF S.R.9 (BRIDGE #5140)
JOB #: 9361220400
CAD FILENAME: C:\1\0320401P25.DWG
LAST REVISION DATE: 8/24/94
OPERATORS INITIALS: JLM

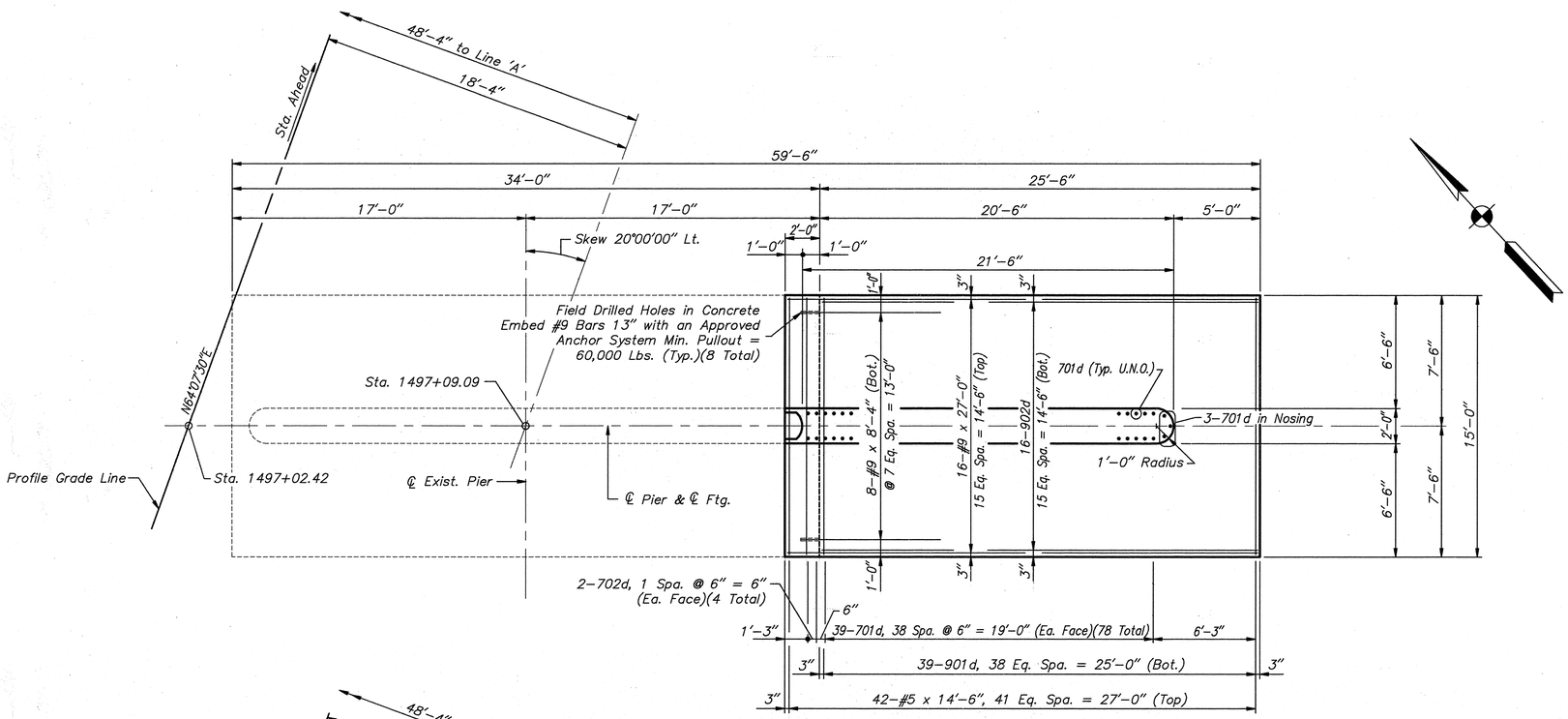

FOOTING PLAN

Scale: 1/4"=1'-0"

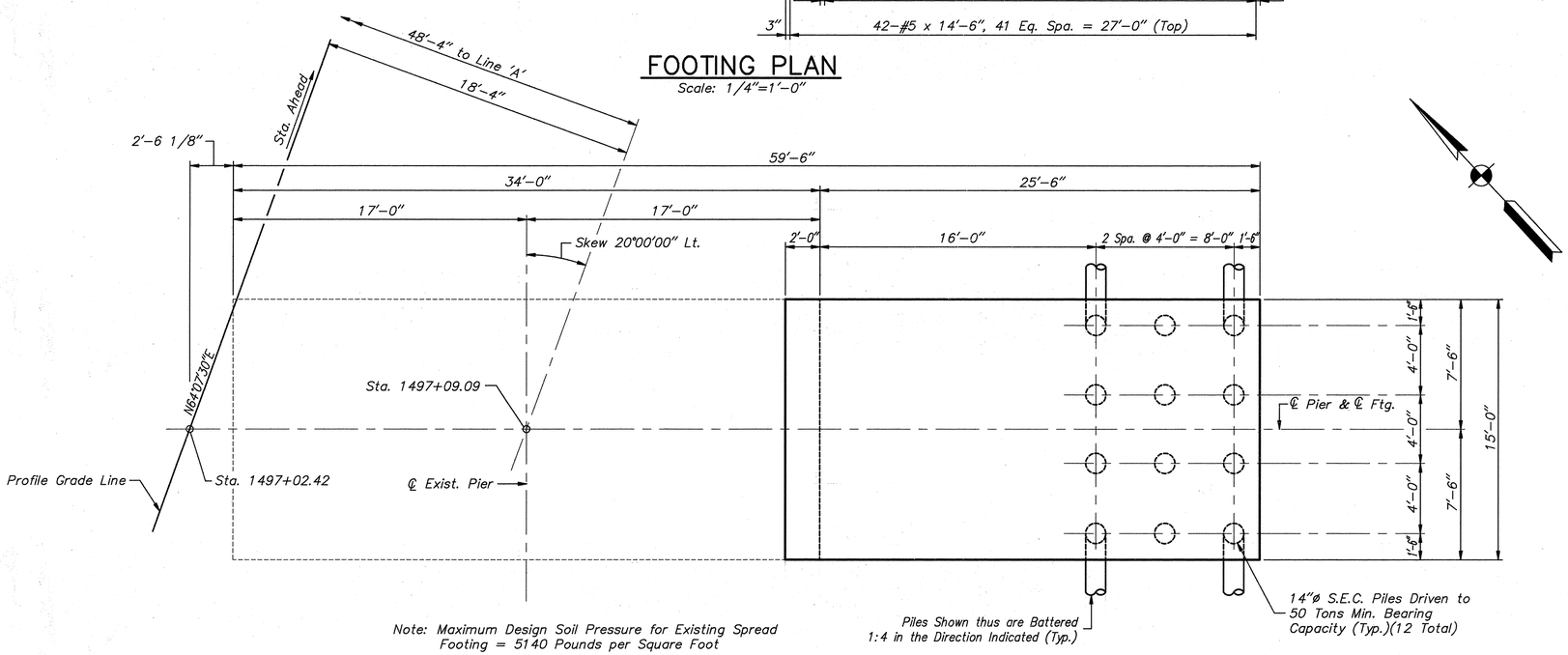

Note: Maximum Design Soil Pressure for Existing Spread Footing = 5140 Pounds per Square Foot

PILE PLAN

Scale: 1/4"=1'-0"

NOTES:

1. For General Notes see Sheet 19.
2. See Bridge Std. C1 for Reinforcing Bar Notes.
3. See Bridge Std. C3 for Type 'A' Construction Joint.
4. Anchor Bolts shall be Set in Non-Shrinking Grout or Epoxy Grout.
5. Holes for Anchor Bolts shall be Drilled.
6. For Bar Bends, Bill of Materials and Sections see Sheet 33.
7. After Piles are Driven and Prior to Placing Concrete, the Subgrade soil for the Pier Footing shall be Compacted to 100% of the Appropriate Maximum Dry Density. Cost to be Included in "Concrete, Class B in Footing"

PIER 3 EASTBOUND

INDIANA DEPARTMENT OF TRANSPORTATION

HENRY COUNTY

SCALE: - AS NOTED DATE: - AUGUST, 1994

DRAWING: - S31 OF 48 SHEET: - 32 OF 57

PROJECT: - IM/70-4 (064) STATION: -

BRIDGE CONTRACT NO. R-21474

BRIDGE FILE: - I-70-115-5140B & I-70-115-5140JB

FARID PEZESHK REGISTERED No. 896147 STATE OF INDIANA PROFESSIONAL ENGINEER

2-30-94

DRAWN	Jim	C'K'D	LMK
DESIGNED	LMK	C'K'D	MAK
TRACED		C'K'D	

JOB NAME: I-70 EAST OF S.R.9 (BRIDGE #5140)
JOB #: 9361220400
CAD FILENAME: C:\V8J204P06.DWG
LAST REVISION DATE: 04/14/94
OPERATORS INITIALS: JLM

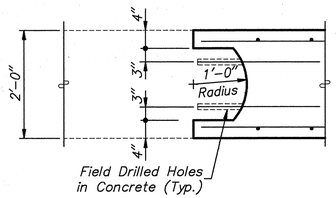

SECTION B–B

Scale: 3/4"=1'-0"

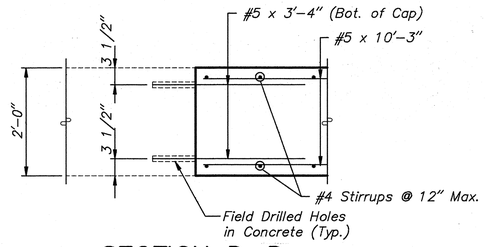

SECTION D–D

Scale: 3/4"=1'-0"

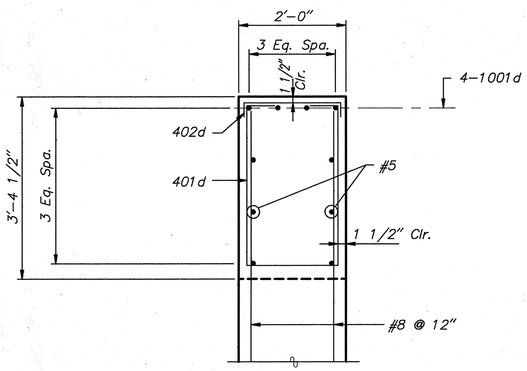

SECTION C–C

Scale: 1/4"=1'-0"

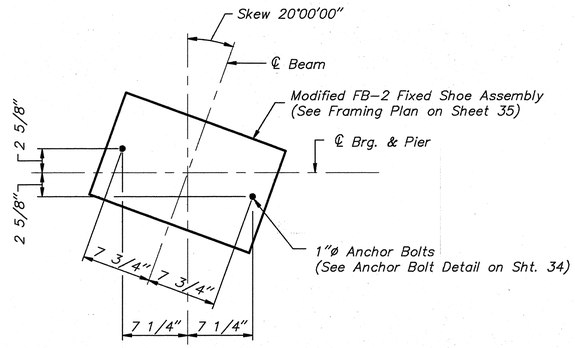

ANCHOR BOLT PLAN

Scale: 1 1/2"=1'-0"

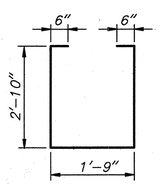

401d x 8'–5"

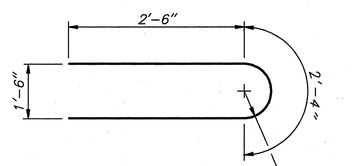

501d x 7'–4"

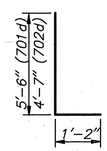

701d x 6'–8"
702d x 5'–9"

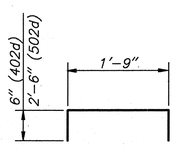

402d x 2'–9"
502d x 6'–9"

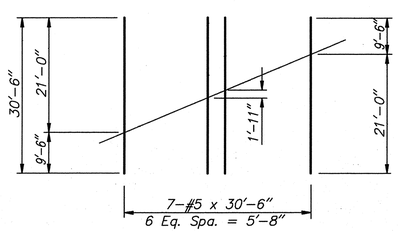

#5d1 x 30'–6"

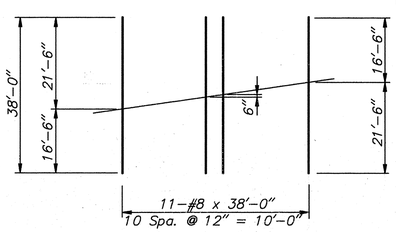

#8d1 x 38'–0"

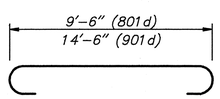

801d x 11'–4"
901d x 17'–0"

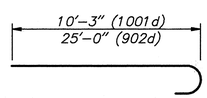

1001d x 11'–8"
902d x 26'–3"

BILL OF MATERIALS PIER 2 EASTBOUND REINFORCING STEEL

MARK / SIZE	NO. REQ'D	LENGTH	WEIGHT (LBS)
1001d	4	11'-8"	
Total #10 Bars			201
#9	16	23'-0"	
#9	16	21'-0"	
#9	8	8'-4"	
Total #9 Bars			2,620
801d	29	11'-4"	
#8d1	11	38'-0"	
#8	23	17'-9"	
#8	23	11'-3"	
Total #8 Bars			3,774
701d	81	6'-8"	
702d	4	5'-9"	
#7	85	16'-10"	
Total #7 Bars			4,075
#6	4	7'-5"	
Total #6 Bars			45
501d	39	7'-4"	
502d	4	6'-9"	
#5d1	7	30'-4"	
#5	64	21'-3"	
#5	6	10'-3"	
#5	24	9'-6"	
#5	20	3'-4"	
Total #5 Bars			2,338
401d	12	8'-5"	
402d	22	2'-9"	
Total #4 Bars			108
Total Reinforcing Steel			13,161

BILL OF MATERIALS PIER 2 EASTBOUND CONCRETE

Location	CYS
Class 'B' Concrete in Footing	
Pour 1	32.7
Total Class 'B' Conc. in Ftg.	32.7
Class 'A' Concrete Above Ftg.	
Pour 2	22.4
Pour 3	22.4
Pour 4	13.4
Total Class 'A' Conc. Above Ftg.	58.2

MISC.

Field Drilled Holes in Conc.	32 EA.
Surface Seal (Est.)	130 SFT
9 – Pile, Concrete, Steel Shell Encased, 0.203 in. Thickness 14 in. Diameter (11 LFT Avg. Length)	99 LFT

BILL OF MATERIALS PIER 3 EASTBOUND REINFORCING STEEL

MARK / SIZE	NO. REQ'D	LENGTH	WEIGHT (LBS)
1001d	4	11'-8"	
Total #10 Bars			201
901d	39	17'-0"	
902d	16	26'-3"	
#9	16	27'-0"	
#9	16	25'-0"	
#9	8	8'-4"	
Total #9 Bars			6,738
#8d1	11	38'-0"	
#8	23	17'-9"	
#8	23	11'-3"	
Total #8 Bars			2,897
701d	81	6'-8"	
702d	4	5'-9"	
#7	85	18'-3"	
Total #7 Bars			4,322
#6	4	7'-5"	
Total #6 Bars			45
501d	40	7'-4"	
502d	4	6'-9"	
#5d1	7	30'-6"	
#5	66	21'-3"	
#5	42	14'-6"	
#5	6	10'-3"	
#5	20	3'-4"	
Total #5 Bars			2,788
401d	12	8'-5"	
402d	22	2'-9"	
Total #4 Bars			108
Total Reinforcing Steel			17,099

BILL OF MATERIALS PIER 3 EASTBOUND CONCRETE

Location	CYS
Class 'B' Concrete in Footing	
Pour 1	58.8
Total Class 'B' Conc. in Ftg.	58.8
Class 'A' Concrete Above Ftg.	
Pour 2	24.6.
Pour 3	22.4
Pour 4	13.4
Total Class 'A' Conc. Above Ftg.	60.4

MISC.

Field Drilled Holes in Conc.	32 EA.
Surface Seal (Est.)	130 SFT
12 – Pile, Conc., Steel Shell Encased, 0.203 in. Thickness 14 in. Diameter (11 LFT Avg. Length)	132 LFT

PIER DETAILS
INDIANA DEPARTMENT OF TRANSPORTATION

HENRY COUNTY

SCALE: – AS NOTED DATE: – AUGUST, 1994

DRAWING: – S32 OF 48 SHEET: – 33 OF 57

PROJECT: – IM/70–4 (064) STATION: –

BRIDGE CONTRACT NO. R–21474

BRIDGE FILE: – I–70–115–5140B & I–70–115–5140JB

FARID PEZESHK REGISTERED No. 890147 STATE OF INDIANA PROFESSIONAL ENGINEER

8.16.94

DRAWN Jlm	C'K'D LMK		
DESIGNED LMK	C'K'D MAK		
TRACED	C'K'D		

JOB NAME: I–70 EAST OF S.R.9 (BRIDGE #5140)
JOB # 9361220400
CAD FILENAME: C:\9320400\S32-04P03.DWG
LAST REVISION DATE: 08/04/94
OPERATORS INITIALS: JLM

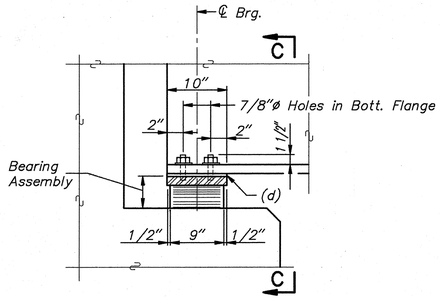

SECTION AT BENT

Notes: (b) Side Retainer.
(c) Anchor Bolt–AB1 w/ 1"ø Cut Washer Under Nut
(d) Shim if Required (See Framing Plan)

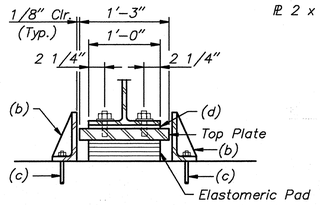

SECTION C–C

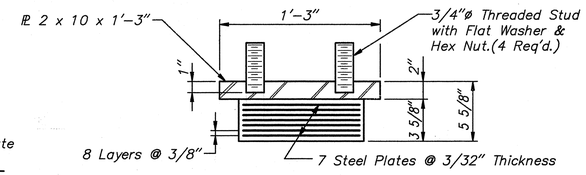

BEARING ASSEMBLY

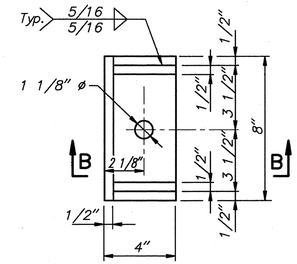

PLAN

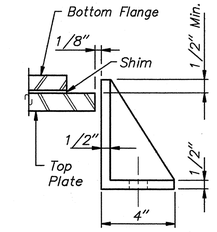

SECTION B–B

SIDE RETAINER

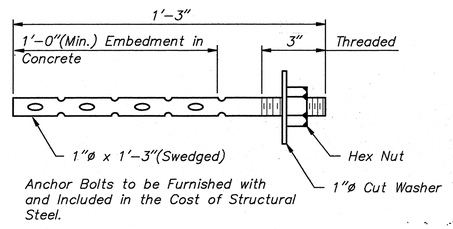

Anchor Bolts to be Furnished with and Included in the Cost of Structural Steel.

ANCHOR BOLT – AB1

(No Paint)

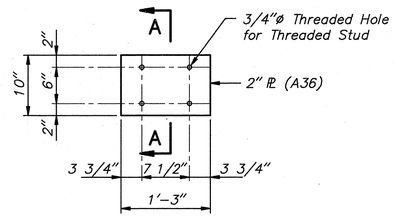

TOP PLATE

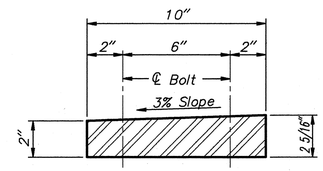

SECTION A–A

TYPE I–ELASTOMERIC EXPANSION BEARING

Scale: None

Note:

1. Elastomeric Material Shall be a 55 (+5) Durometer Elastomer.
2. The Elastomeric Pad & the Top Plate w/ Threaded Studs, Washers and Nuts Comprise the Bearing Assembly, which will be Paid for as "Type I Elastomeric Bearing Assembly", Each.
3. The Weight of Side Retainers is Included in the Weight of Structural Steel.

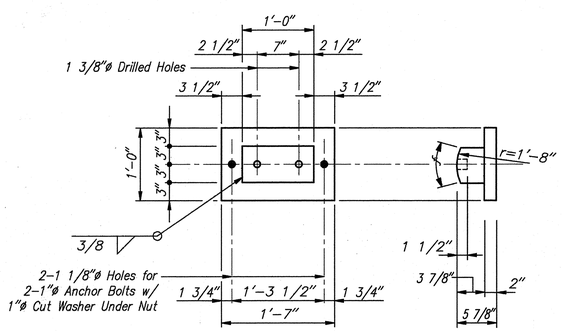

Notes:

1. Curved Surfaces of Shoes to be Machined After Weldments have been Completed.
2. The Top Shoe and the Fixed Base Comprise the Fixed Shoe Assembly, the Total Weight is Included in the Weight of Structural Steel.

FB–2 (MODIFIEL)(A–36)

Scale: None

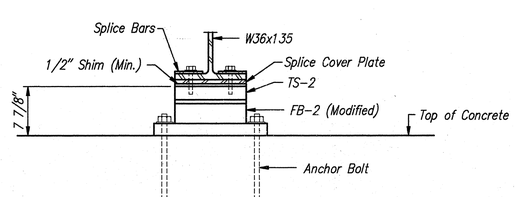

SHOE ASSEMBLY PIER 2 & 3

Scale: None

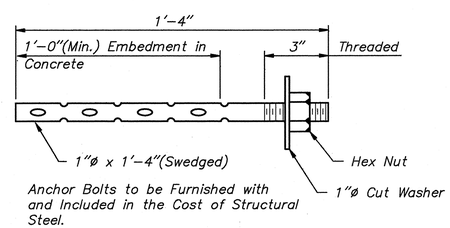

Anchor Bolts to be Furnished with and Included in the Cost of Structural Steel.

ANCHOR BOLT – AB2

(No Paint)

BEARING DETAILS

INDIANA DEPARTMENT OF TRANSPORTATION

HENRY COUNTY

SCALE: – AS NOTED DATE: – AUGUST, 1994

DRAWING: – S33 OF 48 SHEET: – 34 OF 57

PROJECT: – IM/70–4 (064) STATION: –

BRIDGE CONTRACT NO. R–21474

BRIDGE FILE: – I–70–115–5140B & I–70–115–5140JB

FARID PEZESHK REGISTERED No. 890147 STATE OF INDIANA PROFESSIONAL ENGINEER 8.25.94

DRAWN	Jim	C'K'D	AWE
DESIGNED	AWE	C'K'D	MAK
TRACED		C'K'D	

JOB NAME: I–70 EAST OF S.R.9 (BRIDGE #5140)
JOB # 9361220400
CAD FILENAME: C:\13\32045033.DWG
LAST REVISION DATE: 08/14/94
OPERATORS INITIALS: JLM

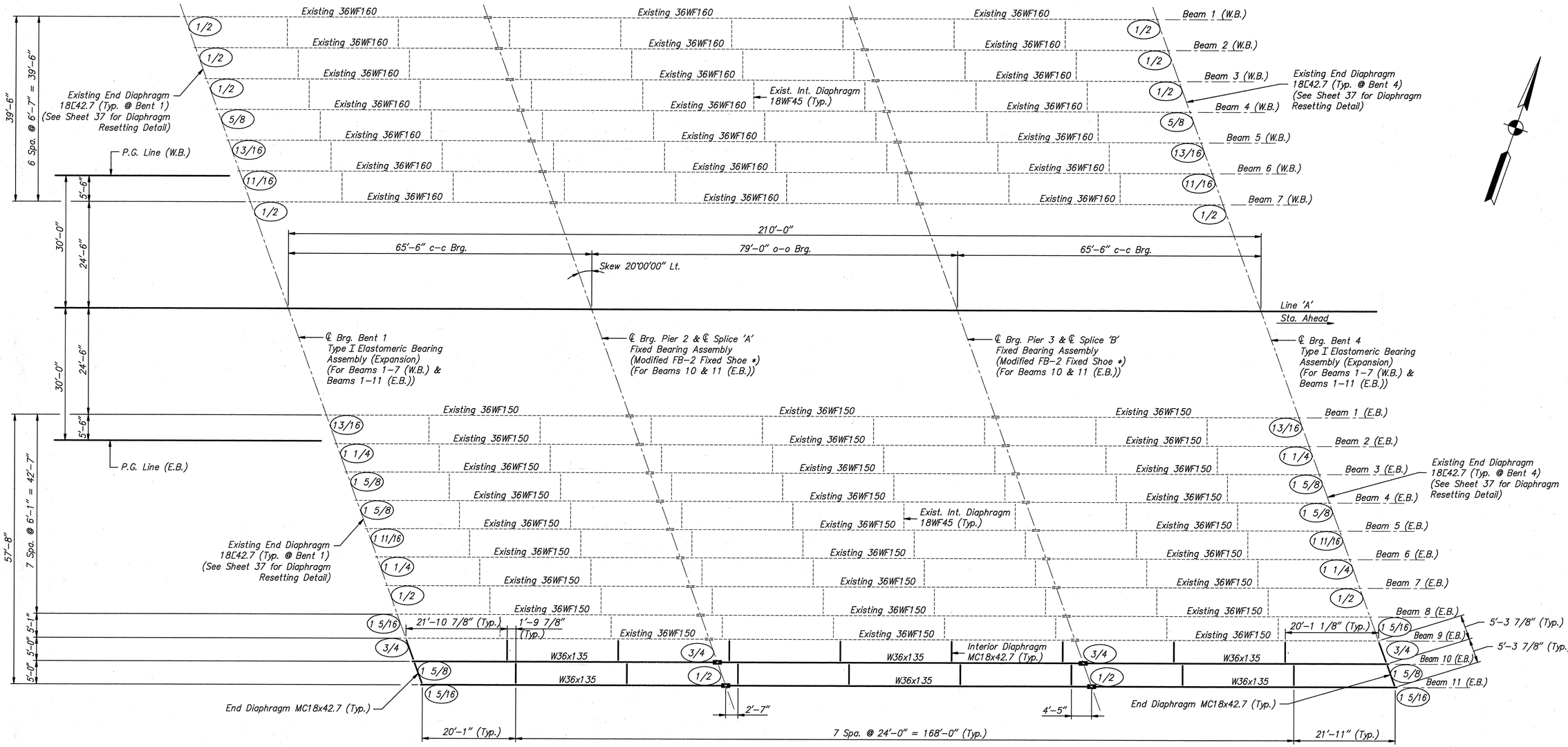

PLAN

Scale: 3/32"=1'-0"

DESIGN DATA

Allowable Design Stresses:

Reinforcing Steel (Grade 60):	fy = 60,000 psi
Class C Concrete:	f'c = 4,000 psi
Class A Concrete:	f'c = 3,500 psi
Class B Concrete:	f'c = 3,000 psi
Structural Steel:	fy = 36 ksi

All Field Welds shall use E70XX Electrodes.

Live Load:

HS20-44 truck loading in accordance with 1992 AASHTO Specifications.
Checked for Special Loading of 2-24,000# axles spaced at 4'-0" centers.

Dead Load:

Actual Dead Load plus 35 psf future wearing surface and 15 psf for permanent metal forms. The slab thickness consists of 6 1/2" structural depth and a 1 1/2" wearing surface. Overall slab (8") consists of Class 'C' Concrete.

Floor Slab:

Designed for 16,000 pound wheel plus impact.

NOTES:

1. See sheet 19 for General Notes.
2. ( ) Indicates Shim Required in Inches (± 1/16" Tolerance).
3. See sheets 37 & 38 for Interior Diaphragm Details.
4. See sheet 37 for End Diaphragm Details.
5. For Additional Details see sheets 36 thru 38.
6. Any Existing Bolts that are Removed are to be Replaced with New. Cost to be Included in the Cost of Structural Steel.
7. Estimated weight of Structural Steel 68,100 lbs. (Includes 250 lbs. of A588 Steel)

* See sheet 34 for Modifications to Fixed Base for Fixed Bearing Assembly.

FRAMING PLAN
INDIANA DEPARTMENT OF TRANSPORTATION

HENRY COUNTY

SCALE: - AS NOTED DATE: - AUGUST, 1994

FARID PEZESHK REGISTERED No. 890147 STATE OF INDIANA PROFESSIONAL ENGINEER 8.30.94

DRAWING: - S34 OF 48 SHEET: - 35 OF 57

PROJECT: -IM/70-4 (064) STATION: -

BRIDGE CONTRACT NO. R-21474

BRIDGE FILE: - I-70-115-5140B & I-70-115-5140JB

DRAWN	Jlm	C'K'D	LMK
DESIGNED	LMK	C'K'D	MAK
TRACED		C'K'D	

JOB NAME: I-70 EAST OF S.R.9 (BRIDGE #5140)
JOB # 9361220400
CAD FILENAME: C:\N3204PP1.DWG
LAST REVISION DATE: 08/31/94
OPERATOR'S INITIALS: JJB

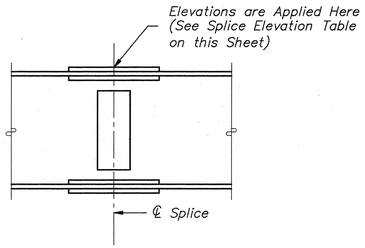

Note: 1. The Above Elevations are with Falsework Removed and Carrying Steel Dead Load only.
2. For Beam Locations see Framing Plan on Sheet 35.

NOTE TO ERECTOR

Top of Beams to be Adjusted to the Above Elevations before Bolting Field Splice Connections.

SPLICE ELEVATION TABLE		
	℄ Splice 'A'	℄ Splice 'B'
℄ Beam 10 (E.B.)	1008.280	1010.650
℄ Beam 11 (E.B.)	1008.255	1010.625

SPLICE ELEVATION DETAIL

Scale: None

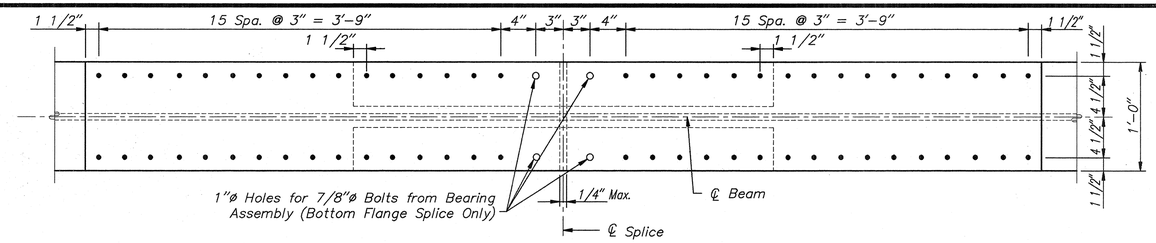

PLAN

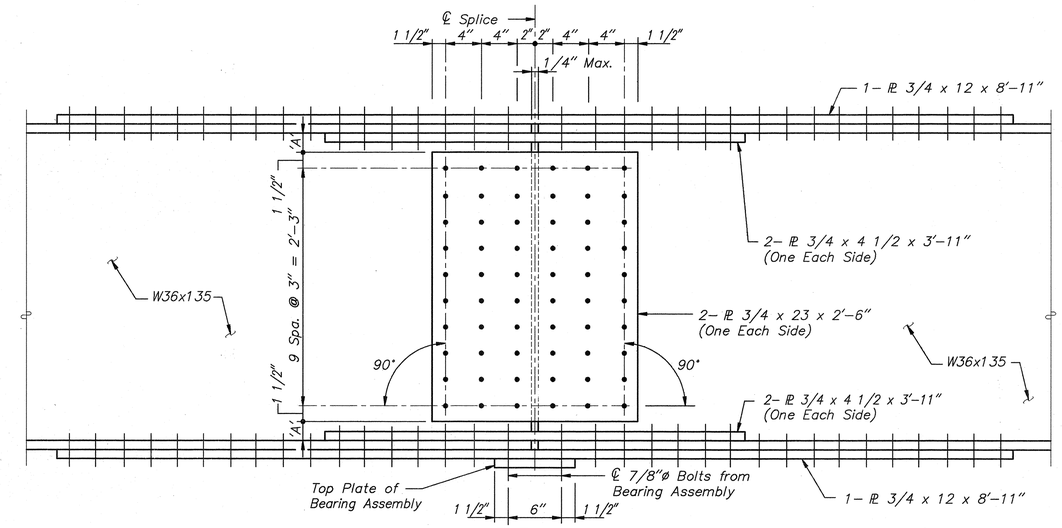

ELEVATION

SPLICE 'A' & 'B'

Scale: 1 1/2" = 1'-0"

Note: 'A' Dimensions to be Equal

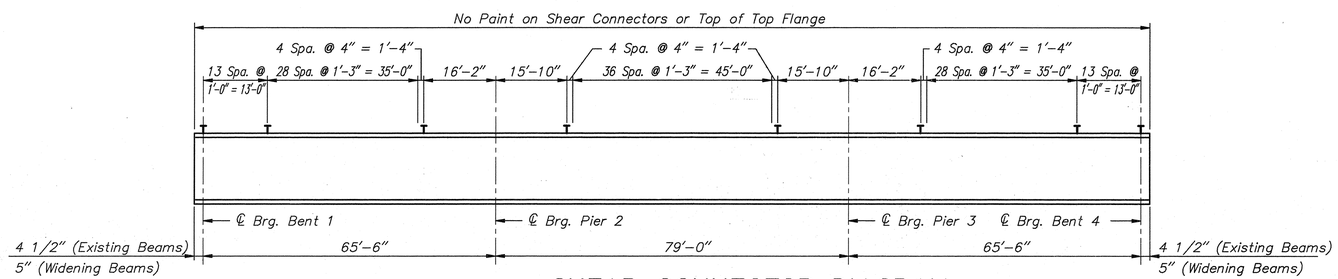

SHEAR CONNECTOR DIAGRAM

Vertical Scale: 3/8" = 1'-0"
Horizontal Scale: 1/16" = 1'-0"

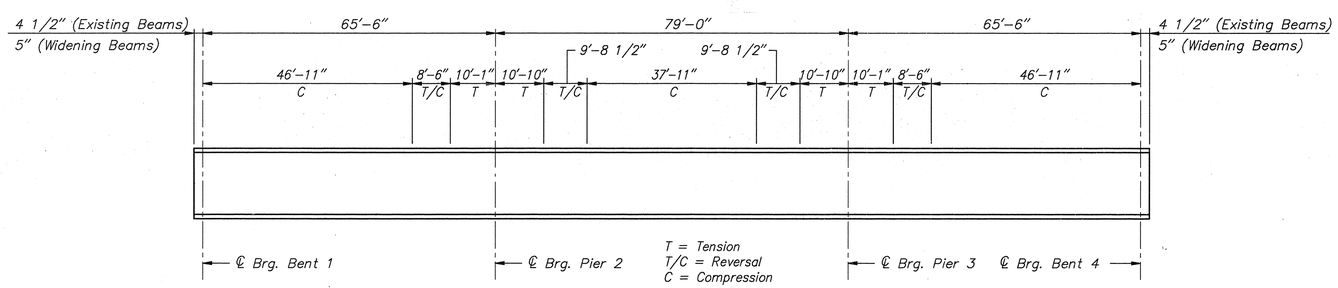

TENSION – COMPRESSION DIAGRAM (TOP FLANGE)

Vertical Scale: 3/8" = 1'-0"
Horizontal Scale: 1/16" = 1'-0"

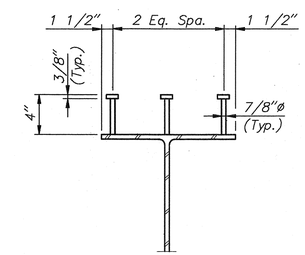

SHEAR STUD CONNECTOR DETAIL

Scale: None

Channel Type or 3/4"ø Shear Stud Connectors may be Used as an Alternate Connector. If Used, they Shall have Equivalent Shear Value and the Proposed Size and Spacing Shall be Submitted for the Approval of the Engineer.

STRUCTURAL STEEL DETAILS
INDIANA DEPARTMENT OF TRANSPORTATION

HENRY COUNTY

SCALE: – AS NOTED DATE: – AUGUST,

DRAWING: – S35 OF 48 SHEET: – 36 OF 57
PROJECT: – IM/70-4 (064) STATION: –
BRIDGE CONTRACT NO. R-21474
BRIDGE FILE: – I-70-115-5140B & I-70-115-5140JB

FARID PEZESHK REGISTERED No. 890147 STATE OF INDIANA PROFESSIONAL ENGINEER 8.30.94

DRAWN	Jlm	C'K'D	LMK
DESIGNED	LMK	C'K'D	MAK
TRACED		C'K'D	

JOB NAME: I-70 EAST OF S.R.9 (BRIDGE #5140)
JOB #: 9361220400
CAD FILENAME: C:\A3204031.DWG
LAST REVISION DATE: 08/11/94
OPERATORS INITIALS: JLM

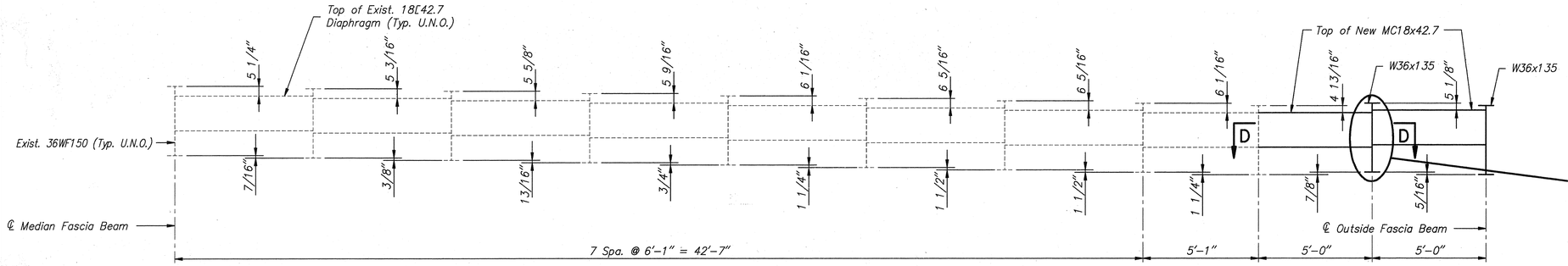

ELEVATION OF END DIAPHRAGMS @ EASTBOUND STRUCTURE

Scale: 3/8" = 1'-0"

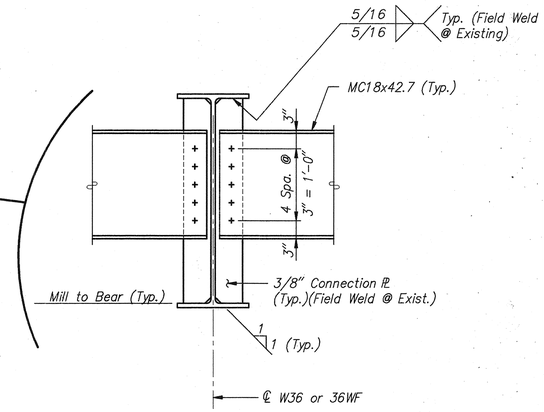

JACKING FRAME CONNECTION DETAIL

Scale: 1" = 1'-0"

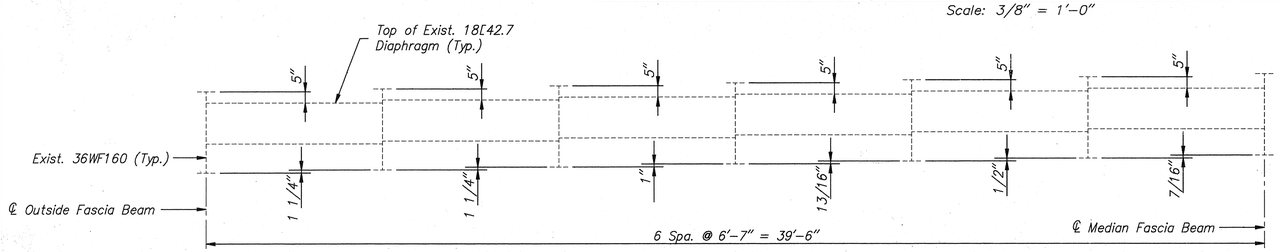

ELEVATION OF END DIAPHRAGMS @ WESTBOUND STRUCTURE

Scale: 3/8" = 1'-0"

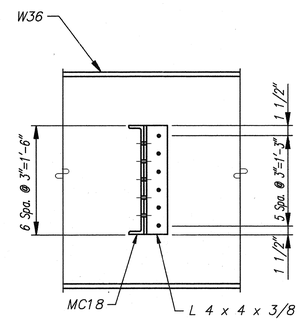

ELEVATION

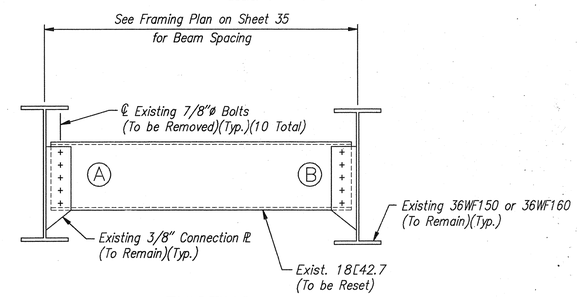

EXISTING

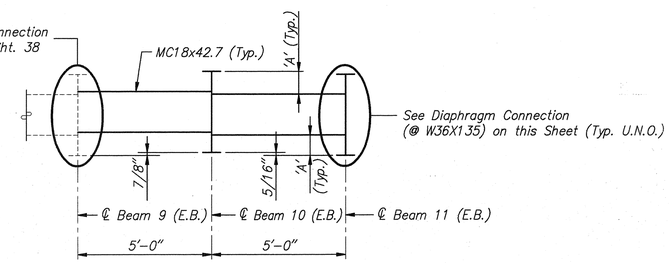

Note: Interior Diaphragms to be Erected so that Dimensions 'A' (Top & Bottom) are Equal (±1")

INTERIOR DIAPHRAGMS @ WIDENING

Scale: 3/8" = 1'-0"

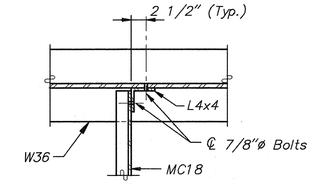

PLAN

DIAPHRAGM CONNECTION (@ W36X135)

Scale: 1" = 1'-0"

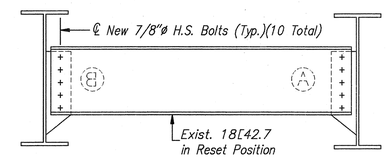

PROPOSED

Notes:

1. The Bolts Connecting the Existing 18[42.7 to the 3/8" Connection Plates Shall be Removed.
2. The Contractor Shall Clean and Paint the Existing Channel and Connection Plates. No Paint is Permitted on Proposed Contact Surfaces.
3. The Existing Channel Shall be Reset as Shown in the Proposed Configuration and Bolted.
4. The Cost of this Work shall be Included in "Structural Steel", LSUM.

DIAPHRAGM RESETTING DETAIL (28 THUS)

Scale: None

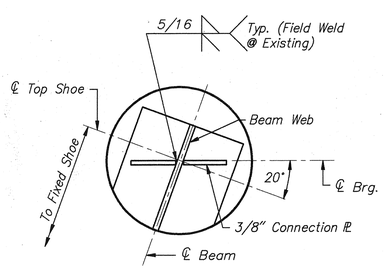

Note: Channels Not Shown for Clarity

DETAIL A

Scale: 1 1/2"=1'-0"

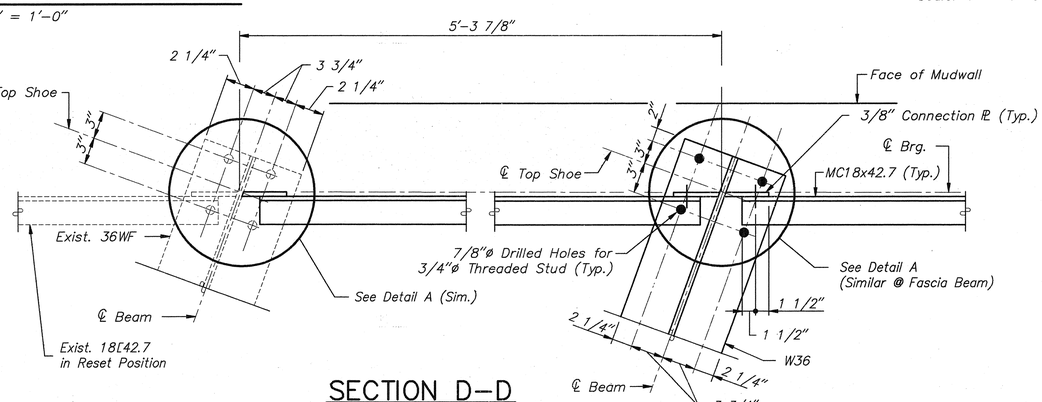

SECTION D-D

Scale: 1 1/2"=1'-0"

Notes:

1. The Bolts Connecting the Existing 18[42.7 to the 3/8" Connection Plates Shall be Removed.
2. The Contractor Shall Clean and Paint the Existing Channel and Connection Plates. No Paint is Permitted on Proposed Contact Surfaces.
3. The Existing Channel Shall be Reset as Shown in the Proposed Configuration and Bolted.
4. The Cost of this Work shall be Included in "Structural Steel", LSUM.

STRUCTURAL STEEL DETAILS

INDIANA DEPARTMENT OF TRANSPORTATION

HENRY COUNTY

SCALE: – AS NOTED DATE: – AUGUST, 1994

DRAWING: – S36 OF 48 SHEET: – 37 OF 57

PROJECT: –IM/70–4 (064) STATION: –

BRIDGE CONTRACT NO. R–21474

BRIDGE FILE: – I–70–115–5140B & I–70–115–5140JB

FARID PEZESHK REGISTERED No. 890147 STATE OF INDIANA PROFESSIONAL ENGINEER 8-30-94

DRAWN	Jlm	C'K'D	LMK
DESIGNED	LMK	C'K'D	MAK
TRACED		C'K'D	

JOB NAME: I-70 EAST OF S.R.9 (BRIDGE #5140)
JOB #: 9361220400
FILENAME: C:\V8200A502.DWG
LAST REVISION DATE: 08/11/94
OPERATORS INITIALS: JLM

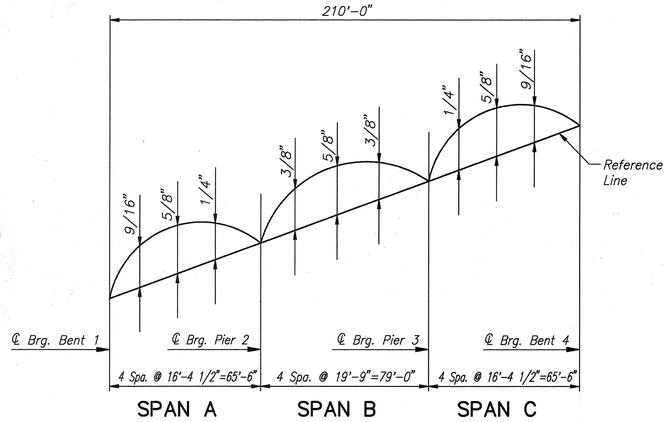

NO LOAD CAMBER AND BLOCKING DIAGRAM, BEAM 10 (E.B.)

Scale: None

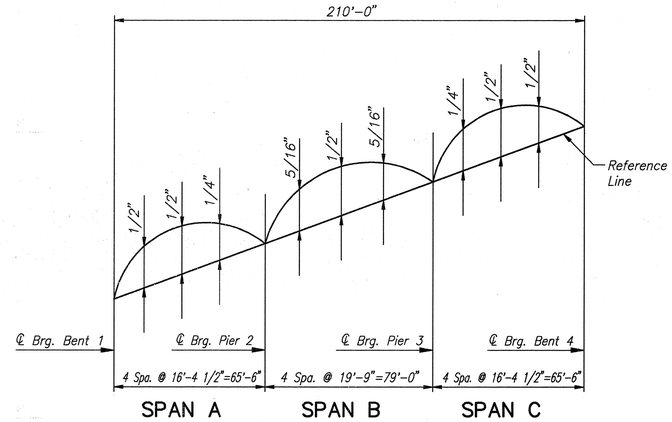

NO LOAD CAMBER AND BLOCKING DIAGRAM, BEAM 11 (E.B.)

Scale: None

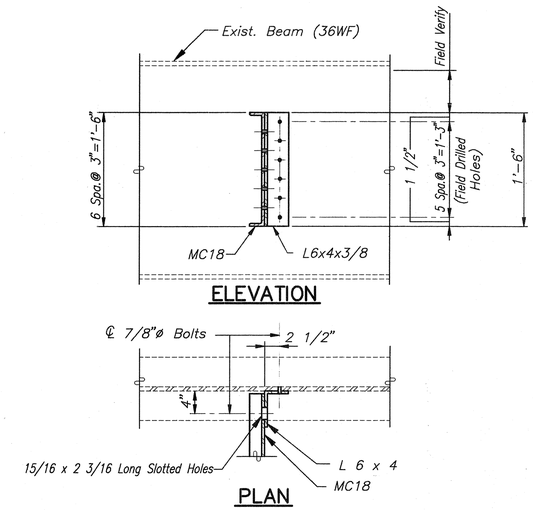

DIAPHRAGM CONNECTION (@ 36WF150)

Scale: 1" = 1'-0"

TABLE OF CAMBERS, BEAM 10 (E.B.)

	℄ Brg. Bent 1	1/4 Point	1/2 Point	3/4 Point	℄ Brg. Pier 2	1/4 Point	1/2 Point	3/4 Point	℄ Brg. Pier 3	1/4 Point	1/2 Point	3/4 Point	℄ Brg. Bent 4
Dead Load Steel	0	1/8"	1/8"	1/16"	0	1/16"	1/8"	1/16"	0	1/16"	1/8"	1/8"	0
Dead Load Concrete Non-Composite	0	3/8"	7/16"	3/16"	0	1/4"	7/16"	1/4"	0	3/16"	7/16"	3/8"	0
Dead Load Concrete Composite	0	1/16"	1/16"	0	0	1/16"	1/16"	1/16"	0	0	1/16"	1/16"	0
Total Camber	0	9/16"	5/8"	1/4"	0	3/8"	5/8"	3/8"	0	1/4"	5/8"	9/16"	0

TABLE OF CAMBERS, BEAM 11 (E.B.)

	℄ Brg. Bent 1	1/4 Point	1/2 Point	3/4 Point	℄ Brg. Pier 2	1/4 Point	1/2 Point	3/4 Point	℄ Brg. Pier 3	1/4 Point	1/2 Point	3/4 Point	℄ Brg. Bent 4
Dead Load Steel	0	1/8"	1/8"	1/16"	0	1/16"	1/8"	1/16"	0	1/16"	1/8"	1/8"	0
Dead Load Concrete Non-Composite	0	5/16"	5/16"	3/16"	0	3/16"	5/16"	3/16"	0	3/16"	5/16"	5/16"	0
Dead Load Concrete Composite	0	1/16"	1/16"	0	0	1/16"	1/16"	1/16"	0	0	1/16"	1/16"	0
Total Camber	0	1/2"	1/2"	1/4"	0	5/16"	1/2"	5/16"	0	1/4"	1/2"	1/2"	0

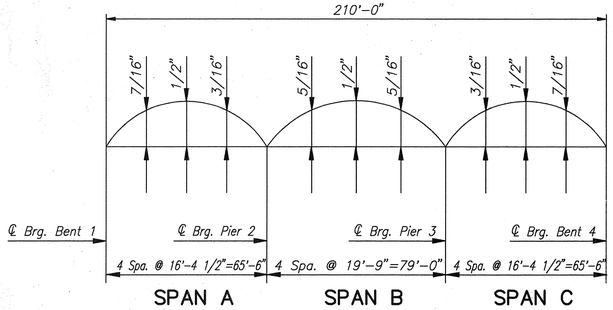

CONCRETE DEAD LOAD DEFLECTION, BEAM 10 (E.B.)

Scale: None

Note: These Concrete Dead Load Deflections Shall be Used in Table of Camber.

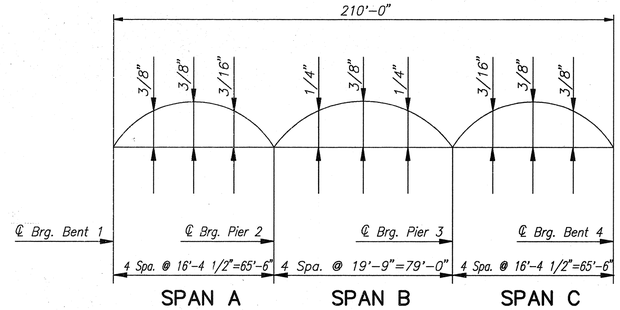

CONCRETE DEAD LOAD DEFLECTION, BEAM 11 (E.B.)

Scale: None

Note: These Concrete Dead Load Deflections Shall be Used in Table of Camber.

DRAWN Jim	C'K'D LMK		
DESIGNED LMK	C'K'D MAK		
TRACED	C'K'D		

JOB NAME: I-70 EAST OF S.R.9 (BRIDGE #5140)
JOB # 9361220400
CAD FILENAME: C:\TEMP\B3204S04.DWG
LAST REVISED DATE: 08/15/94
OPERATORS INITIALS: JJB

STRUCTURAL STEEL DETAILS
INDIANA DEPARTMENT OF TRANSPORTATION

HENRY COUNTY

SCALE: – AS NOTED DATE: – AUGUST,

DRAWING: – S37 OF 48 SHEET: – 38 OF 57

PROJECT: –IM/70–4 (064) STATION: –

BRIDGE CONTRACT NO. R–21474

BRIDGE FILE: – I–70–115–5140B & I–70–115–5140JB

FARID HEZESHK REGISTERED No. 890147 STATE OF INDIANA PROFESSIONAL ENGINEER

8-30-94

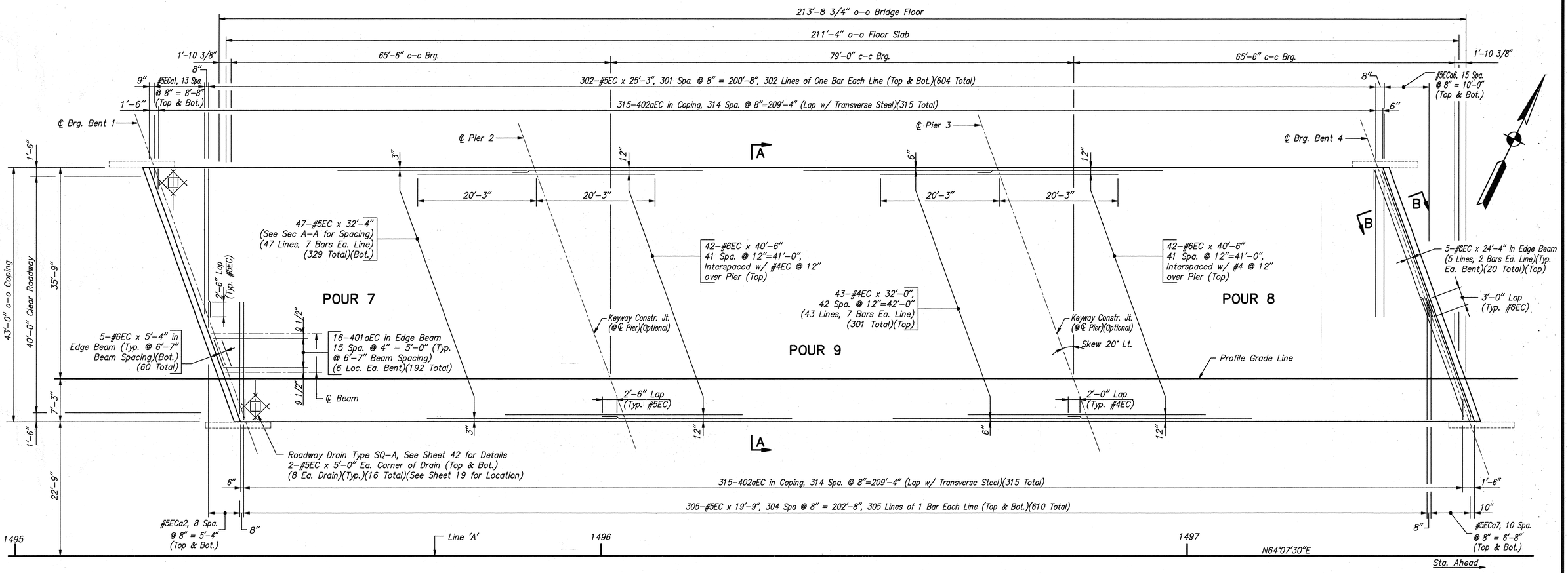

PLAN

Scale: 1/8"=1'-0"

NOTE:

For Additional Notes see Sheet 40.

FLOOR PLAN (WESTBOUND STRUCTURE)

INDIANA DEPARTMENT OF TRANSPORTATION

HENRY COUNTY

SCALE: – AS NOTED DATE: – AUGUST, 1994

DRAWING: – S38 OF 48 SHEET: – 39 OF 57

PROJECT: –IM/70–4 (064) STATION: –

BRIDGE CONTRACT NO. R–21474

BRIDGE FILE: – I–70–115–5140B & I–70–115–5140JB

FARID PEZESHK REGISTERED No. 890147 STATE OF INDIANA PROFESSIONAL ENGINEER 8-30-94

DRAWN	Jlm	C'K'D	AWE
DESIGNED	AWE	C'K'D	LMK
TRACED		C'K'D	

JOB NAME: I-70 EAST OF S.R.9 (BRIDGE #5140)
JOB # 9361220400
CAD FILENAME: C:\9320459P2.DWG
LAST REVISION DATE: 08/15/94
OPERATOR'S INITIALS: JJB

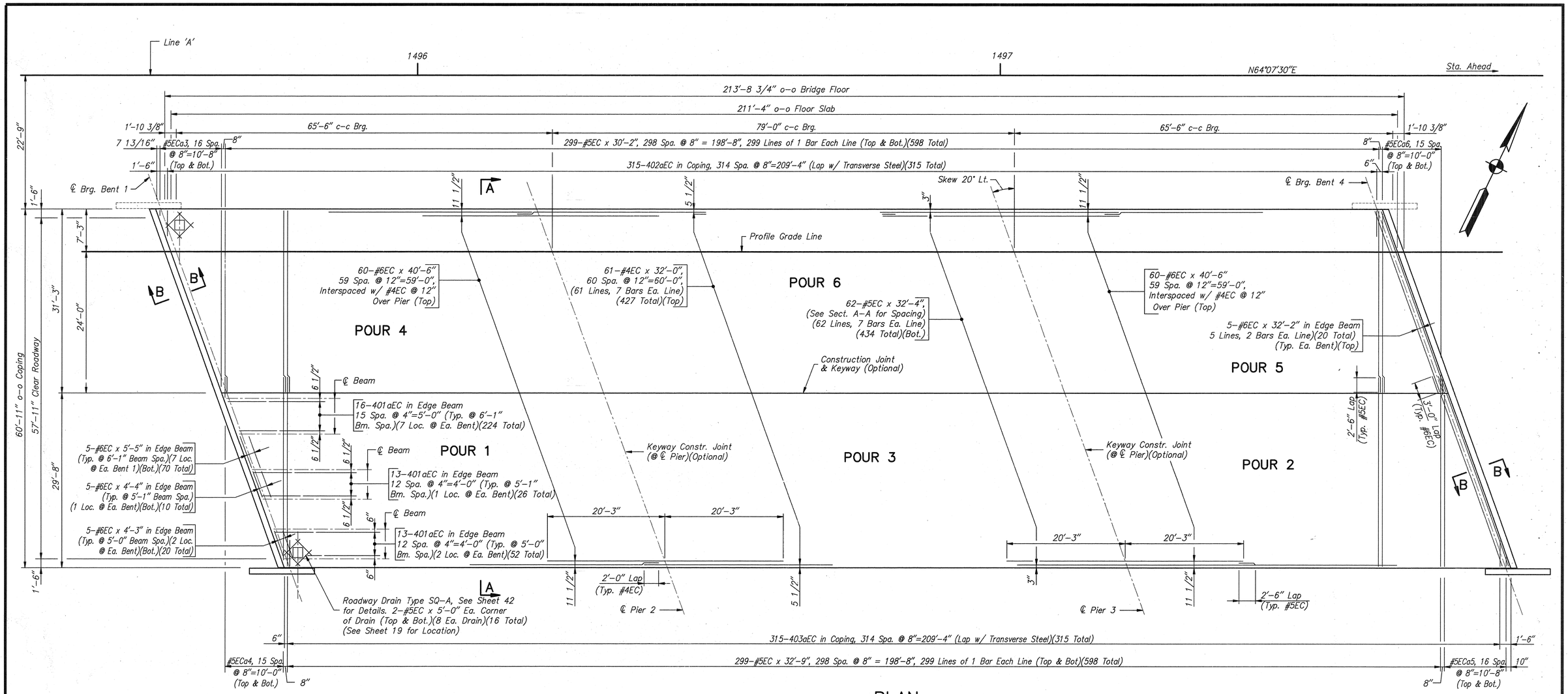

PLAN

Scale: 1/8"=1'-0"

NOTES:

1. For General Notes see sheet 19.
2. For reinforcing bar notes see Bridge Standard C1.
3. After structural steel has been erected, concrete forms shall not be blocked against the expansion end of steel in making any pours adjacent to steel spans.
4. Sequence of pours to be made in order of pour numbers. All superstructure construction joints are optional except as noted, and pours may be made continuous provided the pour terminates at a construction joint indicated on the plans. The Contractor may change the width of pours, sequence of pours, or location of construction joints subject to the approval of the Engineer.
5. The top reinforcing in the deck shall be securely tied down to the deck forms and/or the beams to prevent lifting during concrete placement.
6. The Contractor will have the option of using permanent metal forms for the concrete bridge deck in lieu of removable forms at this structure.
7. For sections, bar bends, and bill of materials, see sheets 41 and 42.
8. For concrete barrier rail elevation and sections, see sheet 42.
9. See sheet 39 for Westbound Floor Plan.

FLOOR PLAN (EASTBOUND STRUCTURE)

INDIANA DEPARTMENT OF TRANSPORTATION

HENRY COUNTY

SCALE: - AS NOTED DATE: - AUGUST, 1994

DRAWING: - S39 OF 48 SHEET: - 40 OF 57

PROJECT: - IM/70-4 (064) STATION: -

BRIDGE CONTRACT NO. R-21474

BRIDGE FILE: - I-70-115-5140B & I-70-115-5140JB

FARID PEZESHK REGISTERED No. 890147 STATE OF INDIANA PROFESSIONAL ENGINEER 8-30-94

DRAWN	Jlm	C'K'D	AWE
DESIGNED	AWE	C'K'D	LMK
TRACED		C'K'D	

JOB NAME: I-70 EAST OF S.R.9 (BRIDGE #5140)
JOB #: 9361220400
CAD FILENAME: C:\SHA\9320459S3.DWG
LAST REVISION DATE: 08/05/94
OPERATORS INITIALS: JLM

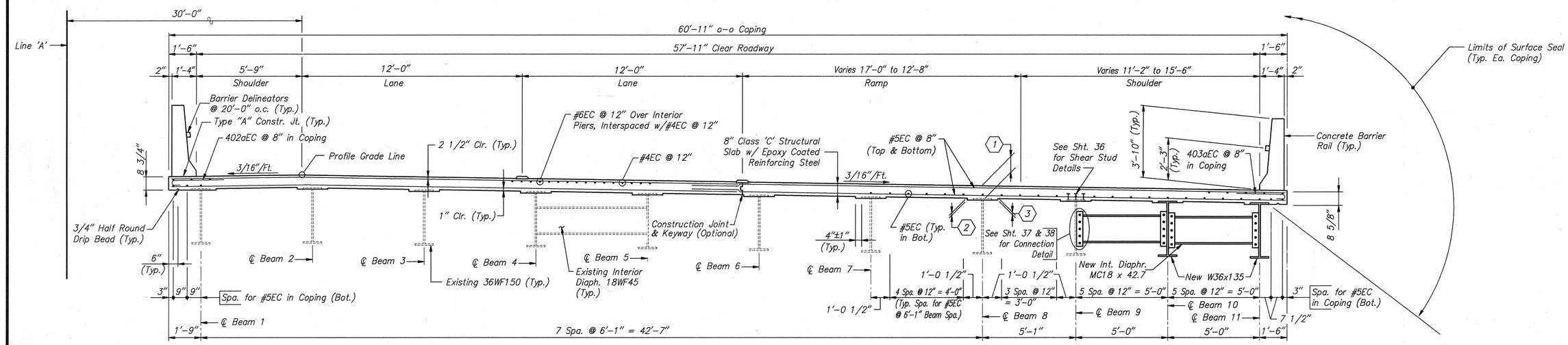

EASTBOUND

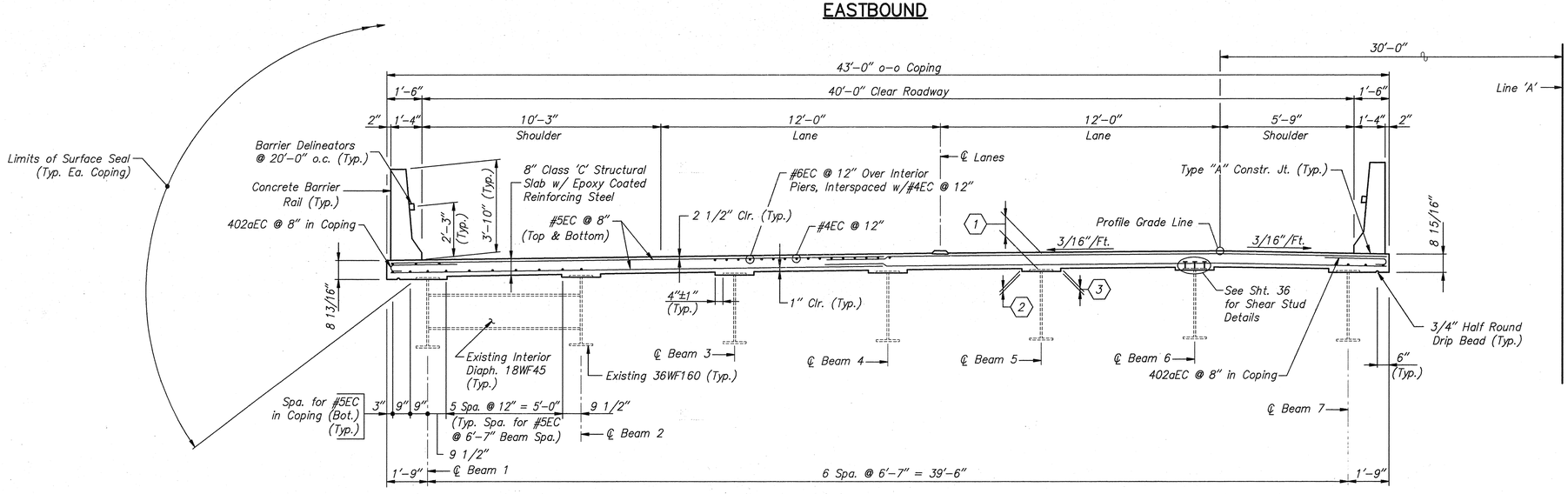

WESTBOUND

SECTION A-A

Scale: 3/8"=1'-0"

FILLET SCHEDULE

BEAM NO.	TOP OF SLAB TO TOP OF WEB (1)	FILLET ON LEFT SIDE OF BEAM (2)	FILLET ON RIGHT SIDE OF BEAM (3)
WESTBOUND			
1	9 1/8"	–	1 1/4"
2	9 1/8"	15/16"	1 1/4"
3	9 1/8"	15/16"	1 1/4"
4	9 3/8"	1 3/16"	1 1/2"
5	9 13/16"	1 5/8"	1 15/16"
6	10 1/2"	2 5/16"	2 5/8"
7	9 1/4"	1 3/8"	–
EASTBOUND			
1	9 1/8"	–	1 1/4"
2	10 1/2"	2 1/2"	2 5/16"
3	9 3/4"	1 7/8"	1 9/16"
4	9 3/8"	1 1/2"	1 3/16"
5	9 1/16"	1 3/16"	7/8"
6	9 1/8"	1 1/4"	15/16"
7	9 1/2"	1 5/8"	1 5/16"
8	9 7/8"	2"	1 11/16"
9	10 1/8"	2 1/4"	1 15/16"
10	8 7/8"	1 1/16"	3/4"
11	8 7/8"	1 1/16"	–

FLOOR DETAILS
INDIANA DEPARTMENT OF TRANSPORTATION

HENRY COUNTY

SCALE: – AS NOTED DATE: – AUGUST,

DRAWING: – S40 OF 48 SHEET: – 41 OF 57

PROJECT: –IM/70–4 (064) STATION: –

BRIDGE CONTRACT NO. R–21474

BRIDGE FILE: – I–70–115–5140B & I–70–115–5140JB

FARID PEZESHK REGISTERED No. 890147 STATE OF INDIANA PROFESSIONAL ENGINEER

8.30.94

DRAWN DJM C'K'D AWE
DESIGNED AWE C'K'D LMK
TRACED C'K'D

JOB NAME: I-70 EAST OF S.R.9 (BRIDGE #5140)
JOB # 9361220400
CAD FILENAME: C:\M1\A5\S32040SP1.DWG
LAST REVISION DATE: 08/07/94
OPERATORS INITIALS: JJB

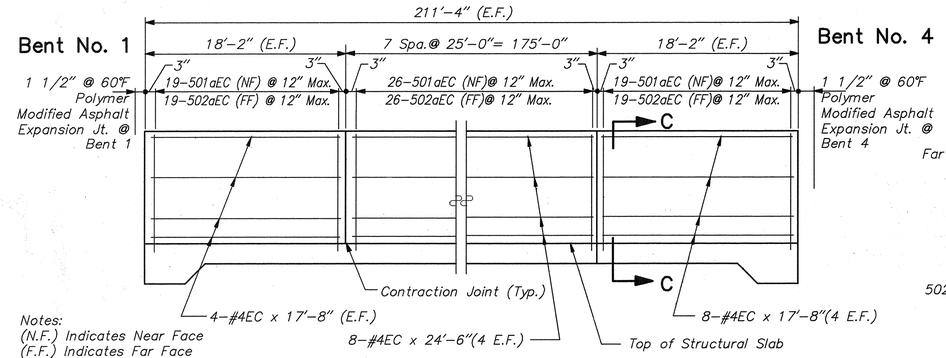

Notes:
(N.F.) Indicates Near Face
(F.F.) Indicates Far Face
(E.F.) Indicates Each Face

3'-10" CONCRETE BARRIER RAIL

Scale: None (View Looking at Traffic Face)

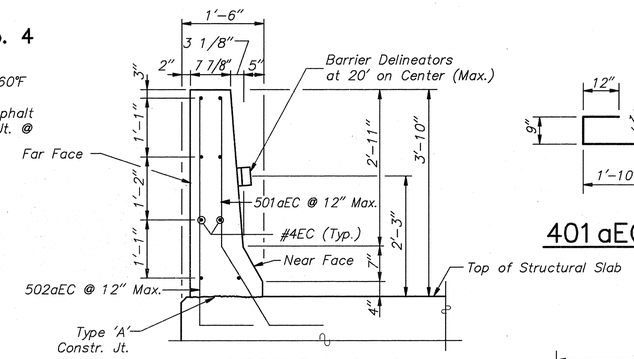

SECTION C-C

Scale: 3/4"=1'-0"

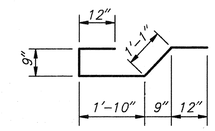

401aEC x 5'-8"

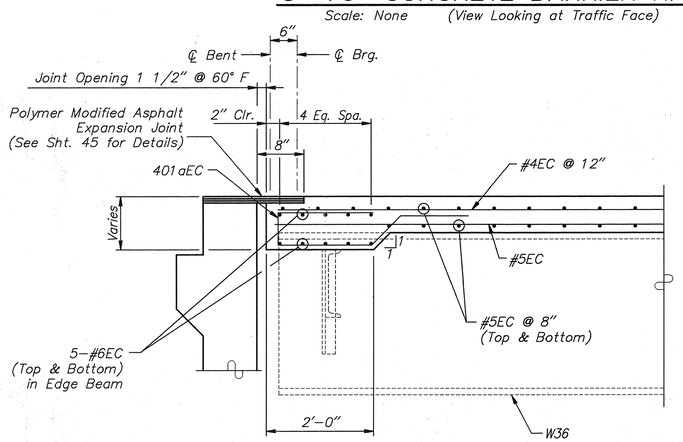

SECTION B-B

Scale: 3/4" = 1'-0"

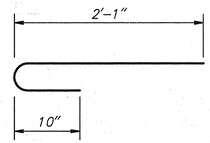

403aEC x 3'-5"

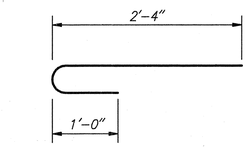

402aEC x 3'-10"

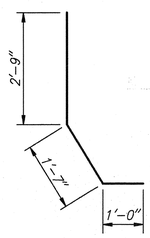

501aEC x 5'-4"

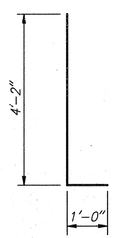

502aEC x 5'-2"

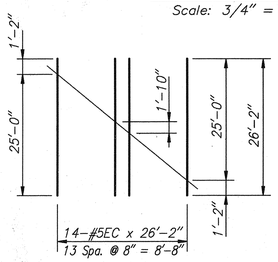

5ECa1 x 26'-2"

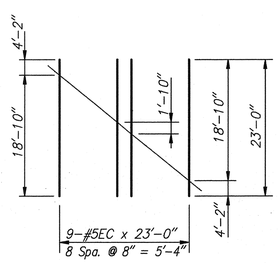

5ECa2 x 23'-0"

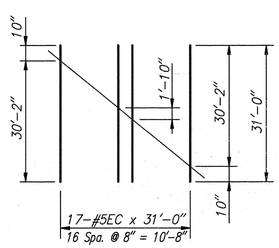

5ECa3 x 31'-0"

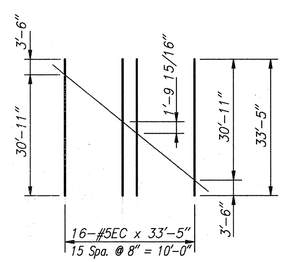

5ECa4 x 33'-5"

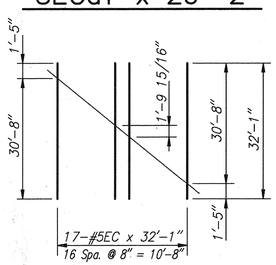

5ECa5 x 32'-1"

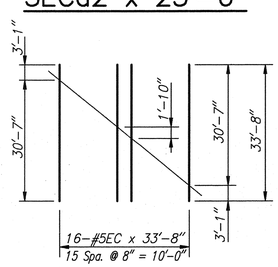

5ECa6 x 33'-8"

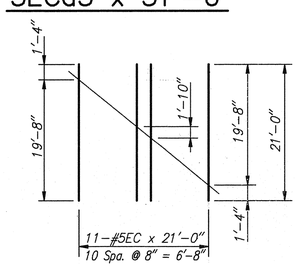

5ECa7 x 21'-0"

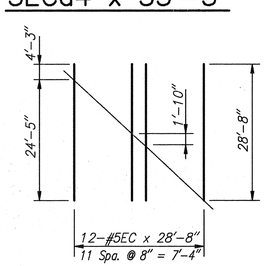

5ECa8 x 28'-8"

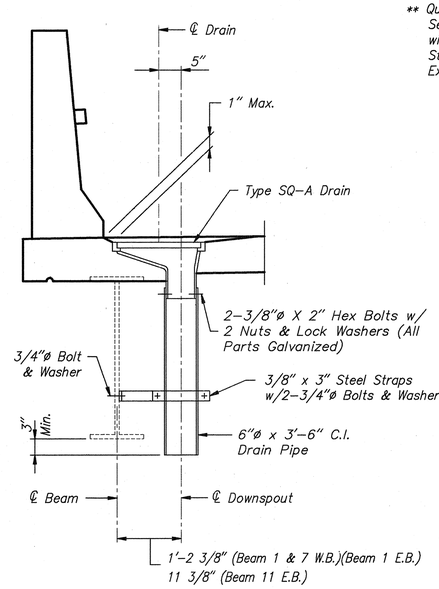

SECTION E-E

Scale: 3/4" = 1'-0"

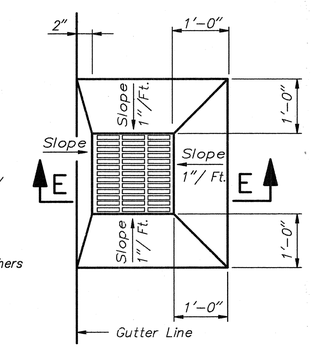

ROADWAY DRAIN TYPE SQ-A

Scale: 3/4" = 1'-0"

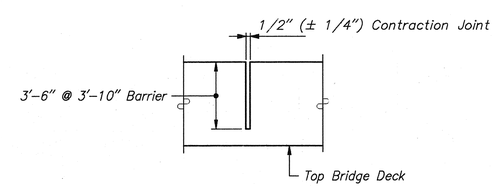

CONTRACTION JOINT DETAIL

Scale: None

BILL OF MATERIALS
CLASS "C" CONCRETE

Location	CYS
Pour 1	51.5
Pour 2	51.5
Pour 3	60.1
Pour 4	54.2
Pour 5	54.2
Pour 6	63.5
Pour 7	74.1
Pour 8	74.1
Pour 9	86.5
Total Concrete, Class C in Superstructure	569.7

MISC.

Polymer Modified Exp. Joint	212 LFT
Barrier Delineators	52 Ea.
Surface Seal (Est.)	29,855 SFT
** Concrete, Class "C" in Railing	107.3 CYS
Type SQ-A Roadway Drains 4 @ 192 Lbs/Ea.	768 LBS
4 Pcs. - 6"ø x 3'-0" Heavy C.I. Soil Pipe w/Hub	220 LBS

* Reinforcing Bars in Concrete Bridge Railing in Accordance with General Note 9 on Bridge Standard BR-1A and Details at Deck Expansion Joint on Sheet 48.

** Quantity Includes 1.0 Cys. for Railing Section Above Mudwall in Accordance with General Note 9 on Bridge Standard BR-1A and Details at Deck Expansion Joint on Sheet 48.

BILL OF MATERIALS
EPOXY COATED REINF. STL.

MARK / SIZE	NO. REQ'D	LENGTH	WEIGHT (LBS)
#6EC	204	40'-6"	
#6EC	20	32'-2"	
#6EC	20	24'-4"	
#6EC	70	5'-5"	
#6EC	60	5'-4"	
#6EC	10	4'-4"	
#6EC	20	4'-3"	
Total #6EC Bars			15,350
501aEC	880	5'-4"	
502aEC	880	5'-2"	
5ECa1	14	26'-2"	
5ECa2	9	23'-0"	
5ECa3	17	31'-0"	
5ECa4	16	33'-5"	
5ECa5	17	32'-1"	
5ECa6	16	33'-8"	
5ECa7	11	21'-0"	
5ECa8	12	28'-8"	
#5EC	598	32'-9"	
#5EC	763	32'-4"	
#5EC	598	30'-2"	
#5EC	604	25'-3"	
#5EC	610	19'-9"	
#5EC	64	5'-0"	
* #5EC	32	3'-8"	
Total #5 Bars			106,975
401aEC	494	5'-8"	
402aEC	945	3'-10"	
403aEC	315	3'-5"	
#4EC	728	32'-0"	
#4EC	224	24'-6"	
#4EC	64	17'-8"	
* #4EC	64	3'-9"	
Total #4 Bars			25,152
Total Epoxy Coated Bars			147,477

FLOOR DETAILS
INDIANA DEPARTMENT OF TRANSPORTATION

HENRY COUNTY

SCALE: - AS NOTED DATE: - AUGUST,

DRAWING: - S41 OF 48 SHEET: - 42 OF 57
PROJECT: -IM/70-4 (064) STATION: -
BRIDGE CONTRACT NO. R-21474
BRIDGE FILE: - I-70-115-5140B & I-70-115-5140JB

FARID PEZESHK REGISTERED No. 890147 STATE OF INDIANA PROFESSIONAL ENGINEER 8-30-96

DRAWN DJM C'K'D AWE
DESIGNED AWE C'K'D MAK
TRACED C'K'D

JOB NAME: I-70 EAST OF S.R.9 (BRIDGE #5140)
JOB # 9361220400
CAD FILENAME: C:\DGN\S3220454.DWG
LAST REVISED DATE: 08/02/94
OPERATORS INITIALS: JLM

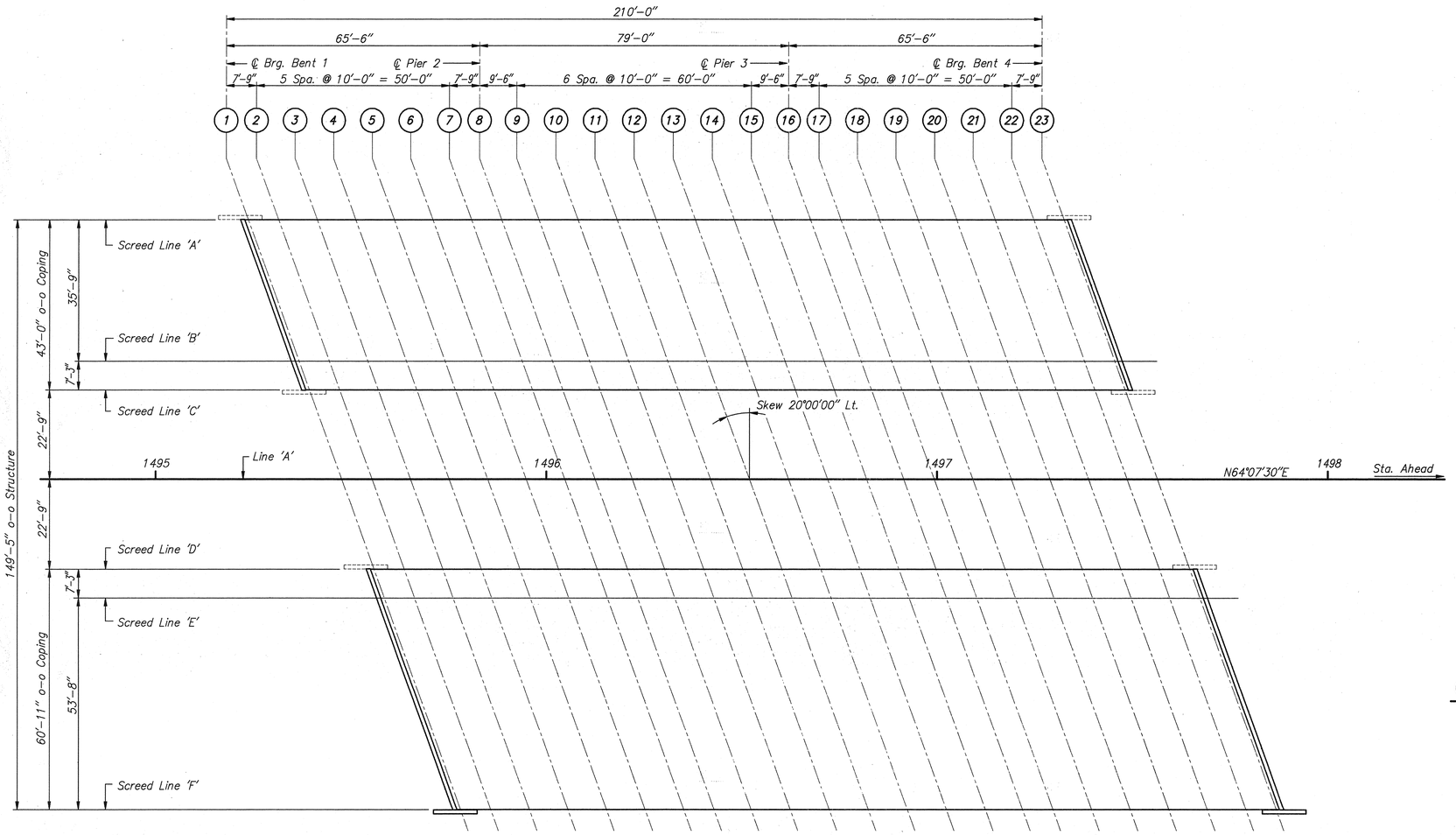

PLAN OF SCREEDS

Scale: 1/16"=1'-0"

PURPOSE

Plan shows locations of Screeds. "Table of Screed Elevations" shows data for setting screed and coping forms so that the slab and coping will be at the final grade elevations after all the concrete has been poured.

SCREED NOTES

1. *After the Bearings and Expansion Joints are set in accordance with the plans, take elevations at all the screed points on top of beams adjacent to the screed points. Subtract these elevations from tabulated elevations and use the resulting dimensions as the height for setting the screed or coping form above that point. This dimension remains constant regardless of how much or in what order the concrete is poured. Do not set screed or coping forms by leveling.*
2. *No concrete in the floor slab is to be poured until the above operations are complete.*
3. *See Sht. 44 for Section and Table of Screed Elevations.*

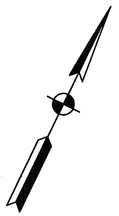

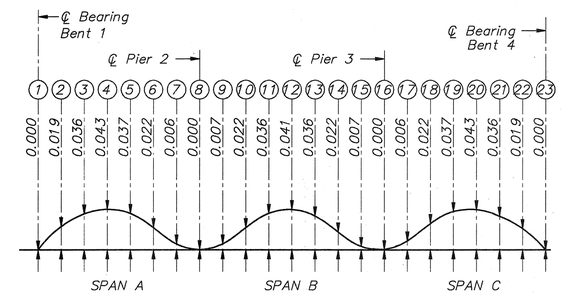

CONCRETE DEAD LOAD DEFLECTION DIAGRAM FOR SCREED LINE 'E' (FEET)

Scale: None

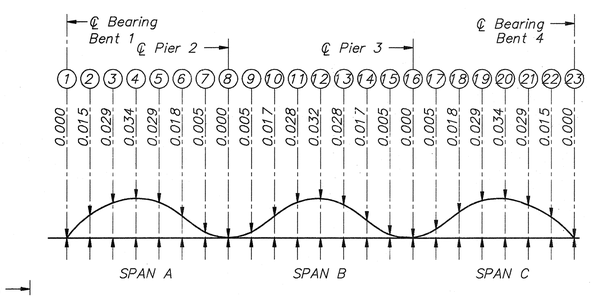

CONCRETE DEAD LOAD DEFLECTION DIAGRAM FOR SCREED LINE 'F' (FEET)

Scale: None

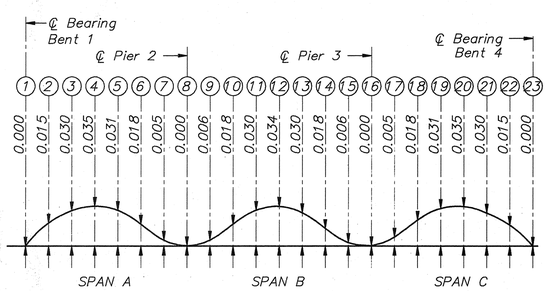

CONCRETE DEAD LOAD DEFLECTION DIAGRAM FOR SCREED LINE 'A' & 'C' (FEET)

Scale: None

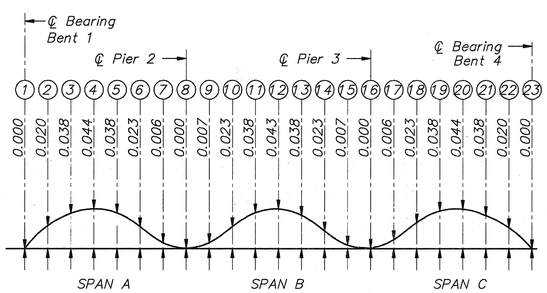

CONCRETE DEAD LOAD DEFLECTION DIAGRAM FOR SCREED LINE 'B' (FEET)

Scale: None

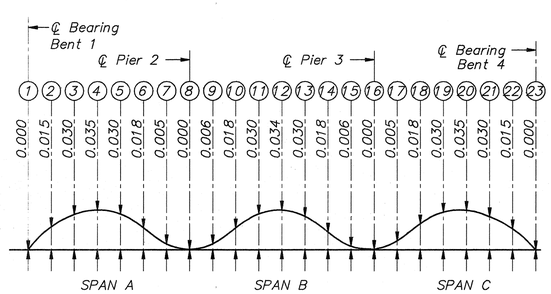

CONCRETE DEAD LOAD DEFLECTION DIAGRAM FOR SCREED LINE 'D' (FEET)

Scale: None

SCREEDS
INDIANA DEPARTMENT OF TRANSPORTATION

HENRY COUNTY

SCALE: – AS NOTED DATE: – AUGUST,

DRAWING: – S42 OF 48 SHEET: – 43 OF 57

PROJECT: – IM/70-4 (064) STATION: –

BRIDGE CONTRACT NO. R-21474

BRIDGE FILE: – I-70-115-5140B & I-70-115-5140JB

FARID PEZESHK REGISTERED No. 890147 STATE OF INDIANA PROFESSIONAL ENGINEER 8.30.94

DRAWN	Jlm	C'K'D	LMK
DESIGNED	LMK	C'K'D	MAK
TRACED		C'K'D	

JOB NAME: DJM
JOB #: I DONT KNOW
CAD FILENAME: C:\31445\3320445C1.DWG
LAST TIME RUN: 09/07/94
OPERATORS INITIALS: JJB

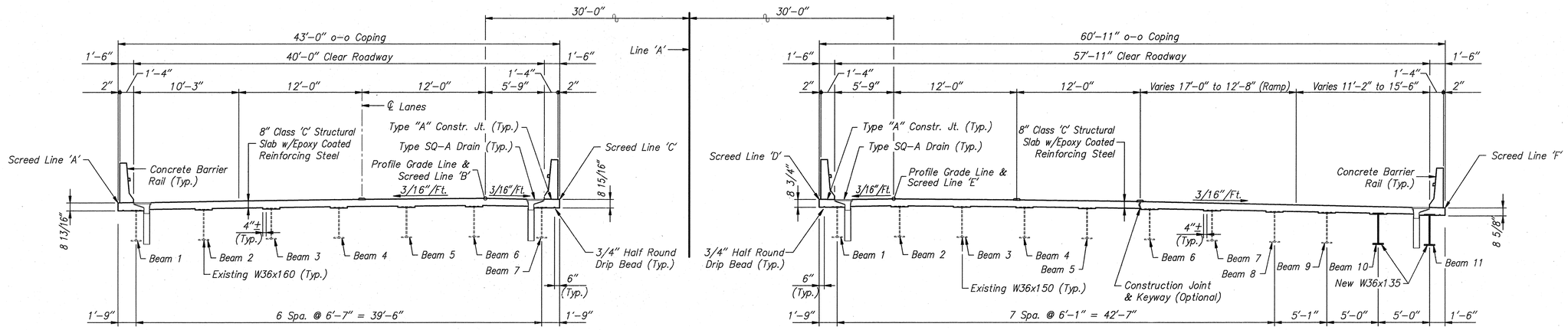

PROPOSED SECTION A–A

Scale: 3/16"=1'-0"

TABLE OF SCREED ELEVATIONS

SCREED LINE		1	2	3	4	5	6	7	8	9	10	11	12	13	14	15	16	17	18	19	20	21	22	23
A	ELEVATION – TOP OF COPING FORM	1005.545	1005.790	1006.105	1006.410	1006.705	1006.995	1007.280	1007.510	1007.800	1008.110	1008.425	1008.725	1009.025	1009.310	1009.600	1009.880	1010.115	1010.430	1010.740	1011.045	1011.340	1011.625	1011.845
	ELEVATION – TOP OF OUTSIDE BEAM																							
	DISTANCE – TOP OF BEAM TO TOP OF SCREED																							
B	ELEVATION – TOP OF SCREED	1006.460	1006.715	1007.035	1007.340	1007.635	1007.920	1008.200	1008.425	1008.720	1009.035	1009.350	1009.655	1009.950	1010.235	1010.520	1010.795	1011.035	1011.355	1011.670	1011.975	1012.270	1012.550	1012.760
	ELEVATION – TOP OF ADJACENT BEAM																							
	DISTANCE – TOP OF BEAM TO TOP OF SCREED																							
C	ELEVATION – TOP OF COPING FORM	1006.430	1006.675	1006.990	1007.295	1007.590	1007.880	1008.165	1008.395	1008.685	1008.995	1009.310	1009.610	1009.910	1010.195	1010.485	1010.765	1011.000	1011.315	1011.625	1011.930	1012.225	1012.510	1012.730
	ELEVATION – TOP OF OUTSIDE BEAM																							
	DISTANCE – TOP OF BEAM TO TOP OF SCREED																							
D	ELEVATION – TOP OF COPING FORM	1006.955	1007.205	1007.520	1007.825	1008.120	1008.405	1008.695	1008.920	1009.210	1009.525	1009.835	1010.140	1010.435	1010.725	1011.010	1011.290	1011.530	1011.840	1012.155	1012.460	1012.755	1013.040	1013.255
	ELEVATION – TOP OF OUTSIDE BEAM																							
	DISTANCE – TOP OF BEAM TO TOP OF SCREED																							
E	ELEVATION – TOP OF SCREED	1007.150	1007.400	1007.715	1008.025	1008.315	1008.600	1008.885	1009.115	1009.405	1009.720	1010.035	1010.340	1010.635	1010.920	1011.205	1011.485	1011.720	1012.035	1012.350	1012.660	1012.950	1013.235	1013.450
	ELEVATION – TOP OF ADJACENT BEAM																							
	DISTANCE – TOP OF BEAM TO TOP OF SCREED																							
F	ELEVATION – TOP OF COPING FORM	1006.895	1007.145	1007.455	1007.760	1008.055	1008.345	1008.635	1008.860	1009.150	1009.460	1009.775	1010.075	1010.375	1010.660	1010.950	1011.230	1011.470	1011.780	1012.090	1012.395	1012.690	1012.980	1013.195
	ELEVATION – TOP OF OUTSIDE BEAM																							
	DISTANCE – TOP OF BEAM TO TOP OF SCREED																							

SCREEDS

INDIANA DEPARTMENT OF TRANSPORTATION

HENRY COUNTY

SCALE: – AS NOTED DATE: – AUGUST,

DRAWING: – S43 OF 48 SHEET: – 44 OF 57

PROJECT: –IM/70–4 (064) STATION: –

BRIDGE CONTRACT NO. R–21474

BRIDGE FILE: – I–70–115–5140B & I–70–115–5140JB

FARID PEZESHK REGISTERED No. 890147 STATE OF INDIANA PROFESSIONAL ENGINEER 8-30-94

DRAWN Jlm C'K'D LMK
DESIGNED LMK C'K'D MAK
TRACED C'K'D

JOB NAME: I-70 EAST OF S.R.9 (BRIDGE #5140)
JOB # 9361220400
CAD FILENAME: C:\SH14C\S320A5C2.DWG
LAST REVISION DATE: 08/05/94
OPERATORS INITIALS: JLM

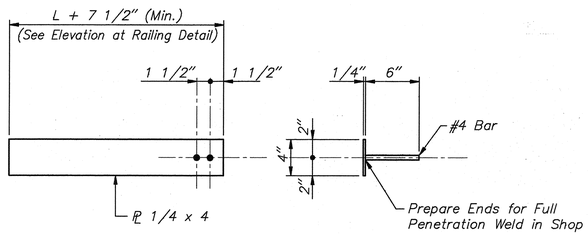

RAILING PLATE DETAILS

Scale: 1 1/2" = 1'-0"

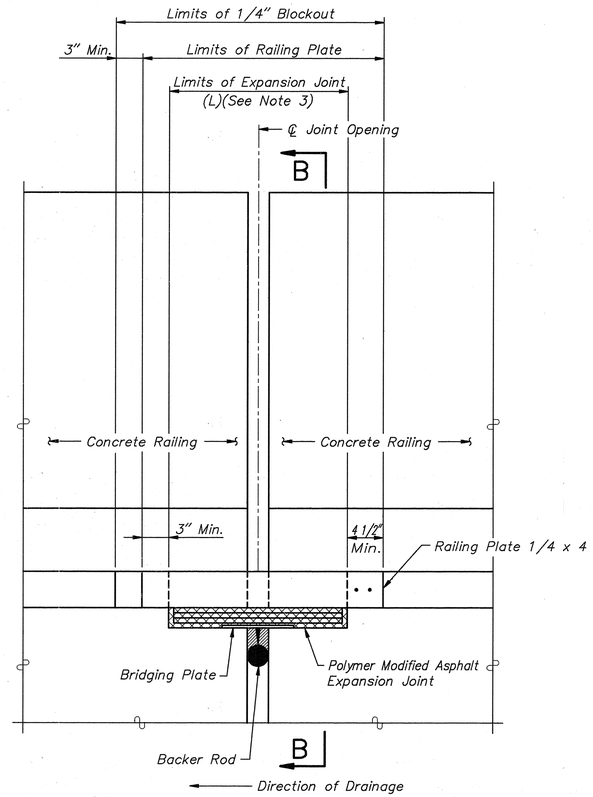

ELEVATION AT RAILING

Scale: 1 1/2" = 1'-0"

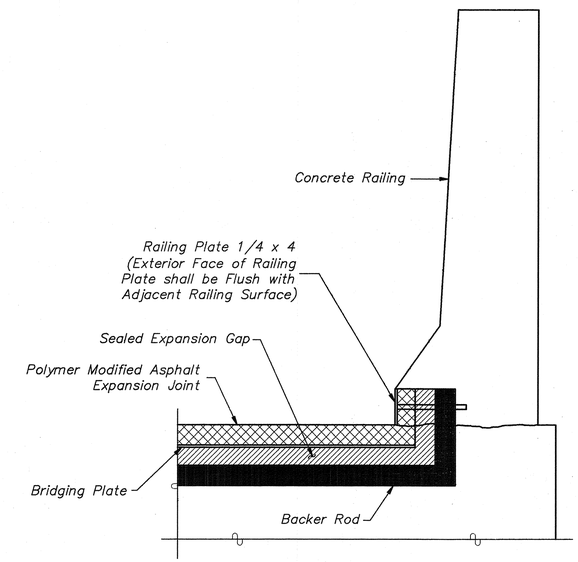

SECTION B-B

Scale: 1 1/2" = 1'-0"

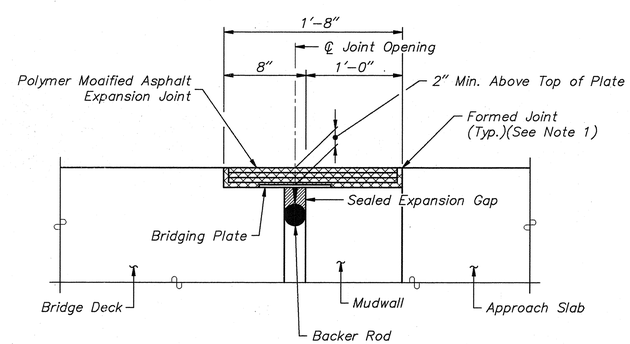

SECTION ⊥ TO JOINT

Scale: 1 1/2" = 1'-0"

NOTES:

1. Polymer Modified Asphalt Expansion Joint shall be Constructed per Manufacturer's Specifications, see Special Provisions.
2. The Cost of Railing Plate shall be Included in the Cost of Polymer Modified Ashphalt Expansion Joint.
3. Limits of Joint (L) = 20"⊥ to Skew

POLYMER MODIFIED ASPHALT EXPANSION JOINT DETAILS
INDIANA DEPARTMENT OF TRANSPORTATION

HENRY COUNTY

SCALE: – AS NOTED DATE: – AUGUST, 19

DRAWING: – S44 OF 48 SHEET: – 45 OF 57

PROJECT: –IM/70–4 (064) STATION: –

BRIDGE CONTRACT NO. R–21474

BRIDGE FILE: – I–70–115–5140B & I–70–115–5140JB

FAND PEZESHK REGISTERED No. 890147 STATE OF INDIANA PROFESSIONAL ENGINEER

7-26-94

DRAWN	DJM	C'K'D	AWE
DESIGNED	AWE	C'K'D	MAK
TRACED		C'K'D	

JOB NAME: I-70 EAST OF S.R.9 (BRIDGE #5140)
JOB #:3361.2.2040
CAD FILENAME: C:\4\93204813.DWG
LAST REVISION DATE: 08/14/94
OPERATORS INITIALS: JLM

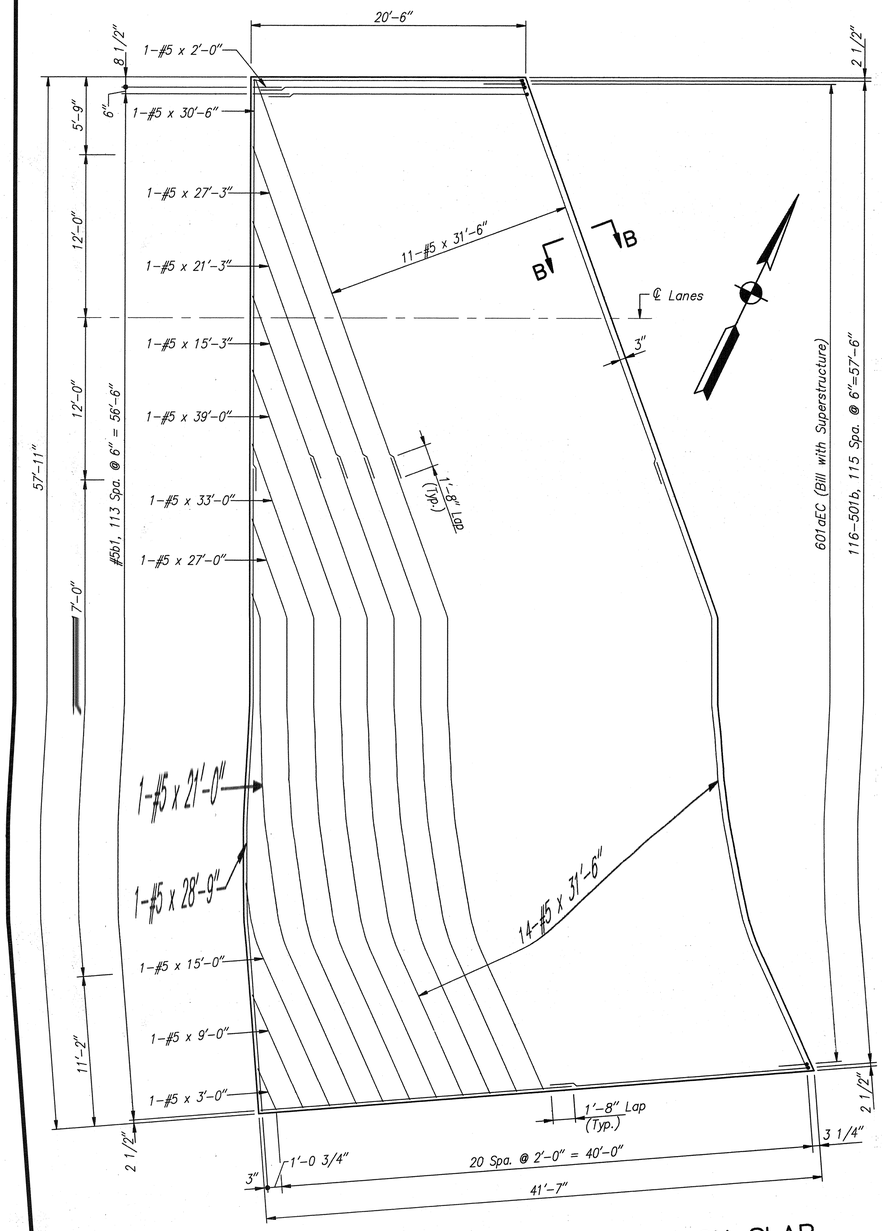

PLAN OF EASTBOUND APPROACH SLAB

Bent 1 (As Shown); Bent 4 (Rotate 180°)
Scale: 3/16" = 1'-0"

BILL OF MATERIALS
EASTBOUND APPROACH SLAB

REINFORCING STEEL

MARK / SIZE	NO. REQ'D	LENGTH	WEIGHT (LBS)
501b	116	20'-7"	
#5b1	57	24'-10"	
#5	1	39'-0"	
#5	1	33'-0"	
#5	25	31'-6"	
#5	1	30'-6"	
#5	1	28'-9"	
#5	1	27'-3"	
#5	1	27'-0"	
#5	1	21'-3"	
#5	1	21'-0"	
#5	1	15'-3"	
#5	1	15'-0"	
#5	1	9'-0"	
#5	1	3'-0"	
#5	1	2'-0"	
Total #5 Bars			5,072
Total Reinforcing Steel			5,072

MISC.

13" Reinf. Cement Conc. Pvmt.	200 Sys.
Type 'O' Compacted Aggregate for Base	67 Tons

Note: Bill of Materials is for One Approach Slab Only.

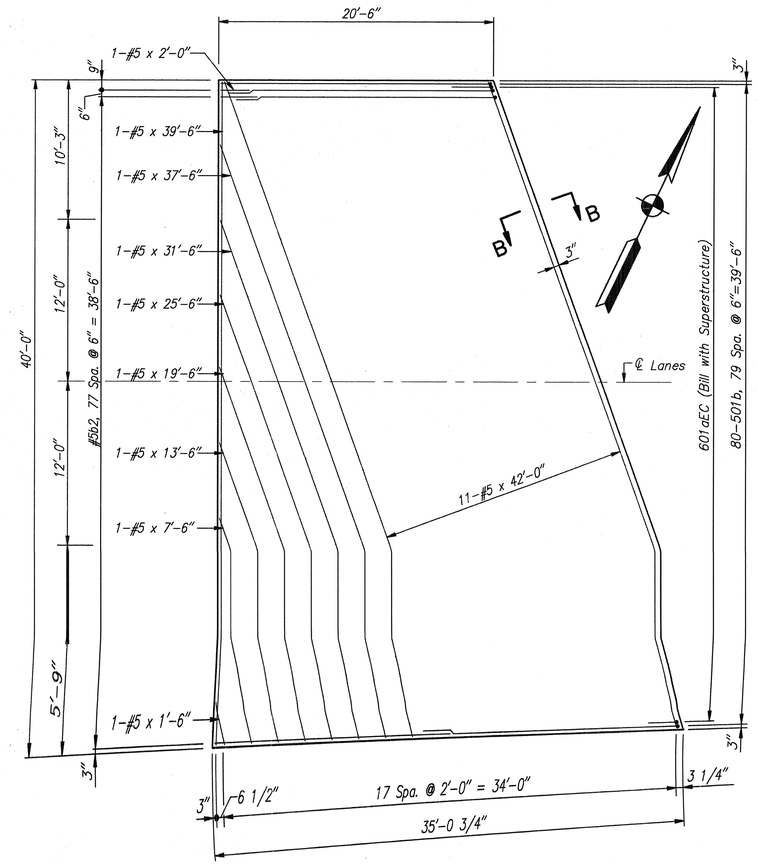

PLAN OF WESTBOUND APPROACH SLAB

Bent 1 (As Shown); Bent 4 (Rotate 180°)
Scale: 3/16" = 1'-0"

BILL OF MATERIALS
WESTBOUND APPROACH SLAB

EPOXY COATED REINF. STL.

MARK / SIZE	NO. REQ'D	LENGTH	WEIGHT (LBS)
501b	80	20'-7"	
#5b2	39	18'-4"	
#5	11	42'-0"	
#5	1	39'-6"	
#5	1	37'-6"	
#5	1	31'-6"	
#5	1	25'-6"	
#5	1	19'-6"	
#5	1	13'-6"	
#5	1	7'-6"	
#5	1	2'-0"	
#5	1	1'-6"	
Total #5 Bars			3,131
Total Reinforcing Steel			3,131

MISC.

13" Reinf. Cement Conc. Pvmt.	124 Sys.
Type 'O' Compacted Aggregate for Base	41 Tons

Note: Bill of Materials is for One Approach Slab Only.

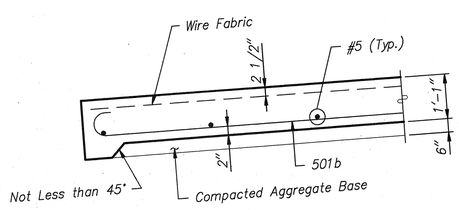

SECTION B-B

Scale: None

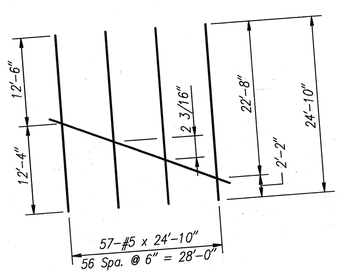

#5b1 x 24'-10"

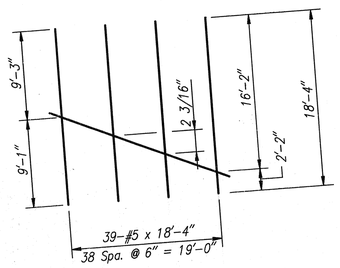

#5b2 x 18'-4"

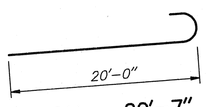

501b x 20'-7"

APPROACH SLAB DETAILS
INDIANA DEPARTMENT OF TRANSPORTATION
HENRY COUNTY

SCALE: - AS NOTED DATE: - AUGUST, 1994

DRAWING: - S45 OF 48 SHEET: - 46 OF 57
PROJECT: -IM/70-4 (064) STATION: -
BRIDGE CONTRACT NO. R-21474
BRIDGE FILE: - I-70-115-5140B & I-70-115-5140JB

FARID PEZESHK REGISTERED NO. 90107 STATE OF INDIANA PROFESSIONAL ENGINEER 8-30-94

DRAWN Jlm C'K'D LMK
DESIGNED LMK C'K'D MAK
TRACED C'K'D

JOB NAME: I-70 EAST OF S.R.9 (BRIDGE #5140)
JOB # 9361220400
CAD FILENAME: C:\A\S2204AS1.DWG
LAST REVISION DATE: 08/11/94
OPERATORS INITIALS: JLM

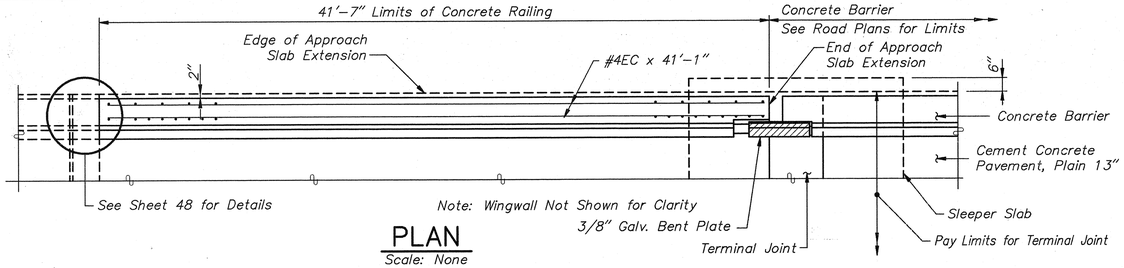

PLAN
Scale: None

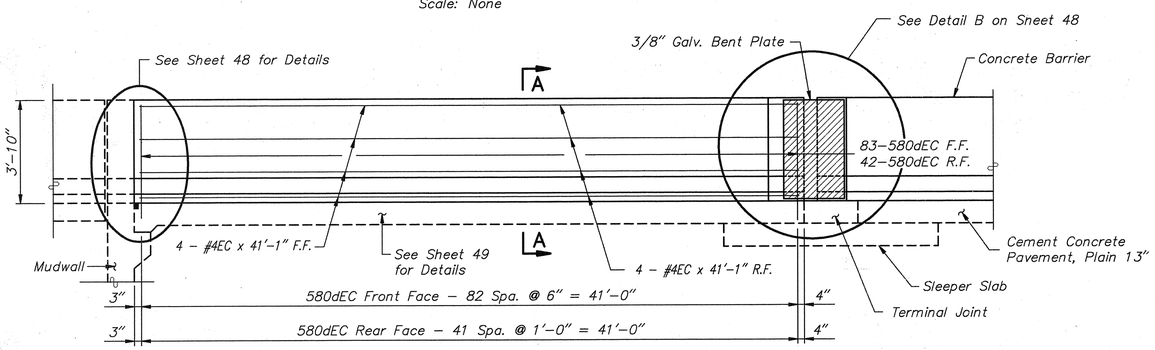

ELEVATION
Scale: None

CONCRETE RAILING @ WINGWALL 'H'

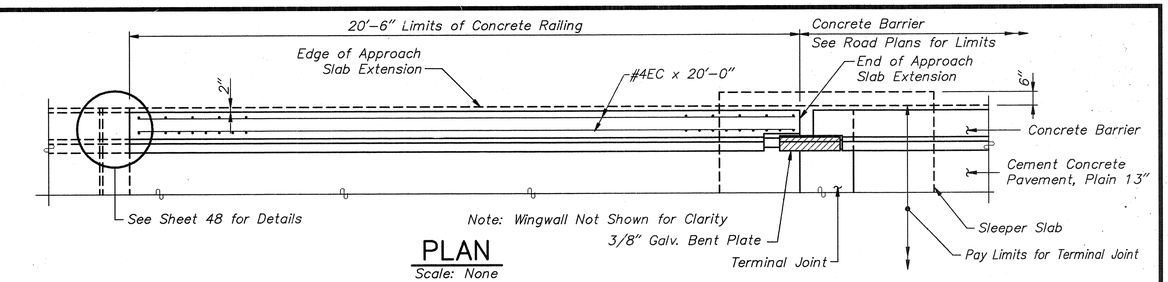

PLAN
Scale: None

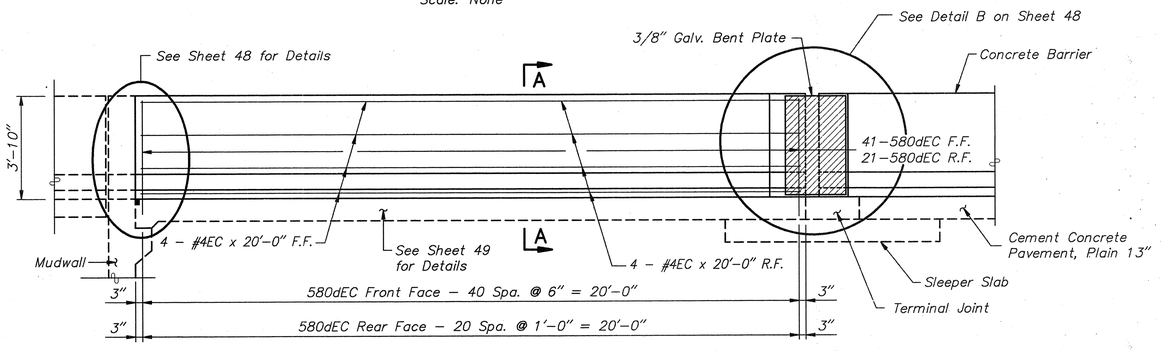

ELEVATION
Scale: None

CONCRETE RAILING @ WINGWALL 'C' & 'E'

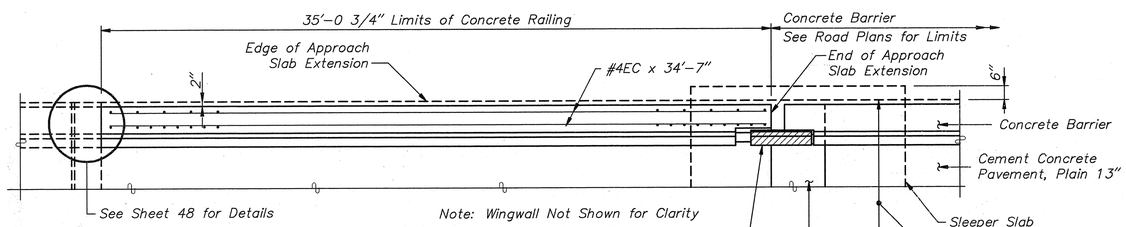

PLAN
Scale: None

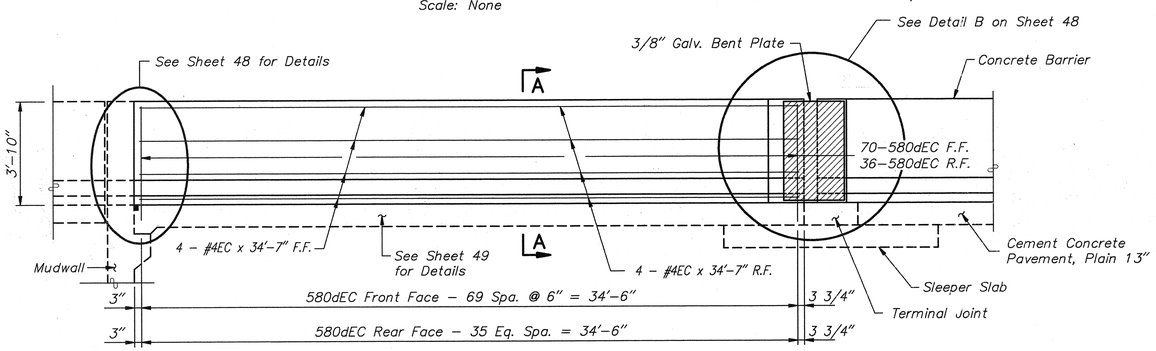

ELEVATION
Scale: None

CONCRETE RAILING @ WINGWALL 'B'

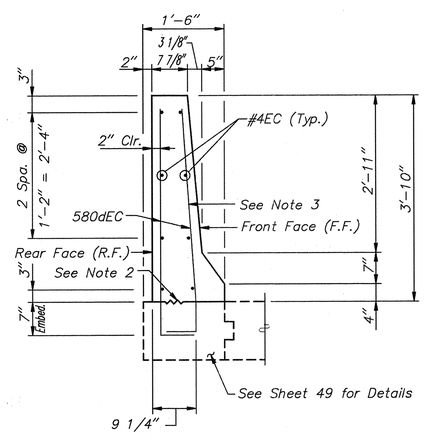

SECTION A-A
Scale: 3/4"=1'-0"

NOTES:

1. For Bar Bends and Bill of Materials see Sheet 48.
2. Type "A" Construction Joint.
3. These Bars shall be Field Bent to Provide 2 inches Clearance from the Top of the Concrete Railing.
4. See Sheets 49 for Approach Slab Extension Details and Details of the Concrete Railing at the End of the Bridge.
5. Cost of Bent Plate, 1/2"ø Studs, Forming Recesses, Welding Studs, and all other Necessary Materials, Equipment, Labor, and Incidentals Required to Install the 3/8" Galv. Bent Plate shall be included in the Cost of other items.
6. For Additional Details see Sheet 48.

CONCRETE RAILING DETAILS
INDIANA DEPARTMENT OF TRANSPORTATION

HANCOCK COUNTY

SCALE: - AS NOTED DATE: - AUGUST,

DRAWING: - S46 OF 48 SHEET: - 47 OF 57

PROJECT: - IM/70-4 (064) STATION: -

BRIDGE CONTRACT NO. R-21474

BRIDGE FILE: - I-70-115-5140B & I-70-115-5140JB

FARID OREESHI REGISTERED No. 8911 STATE OF INDIANA PROFESSIONAL ENGINEER 8-30-94

DRAWN	Jlm	C'K'D	LMK
DESIGNED	LMK	C'K'D	MAK
TRACED		C'K'D	

JOB NAME: I-70 EAST OF S.R.9 (BRIDGE #5140)
JOB # 9361220400
CAD FILENAME: C:\5140\93204BR9.DWG
LAST REVISION DATE: 08/08/94
OPERATORS INITIALS: BJS

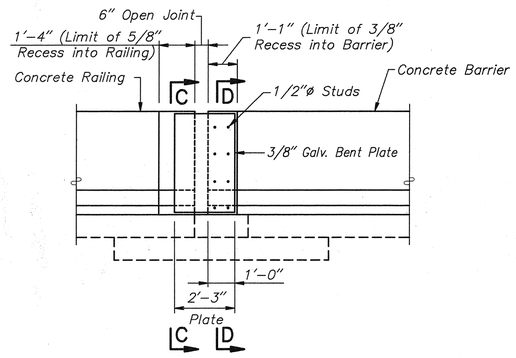

DETAIL B

Scale: 3/8" = 1'-0"

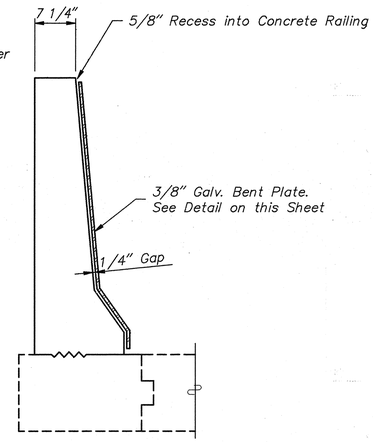

Notes:
1. For Concrete Railing Dimensions see Section A–A on Sheet 47.
2. Reinforcing Not Shown for Clarity.

SECTION C–C

Scale: 1"=1'-0"

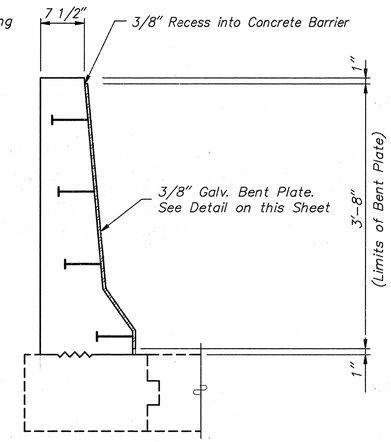

Notes:
1. For Concrete Barrier Dimensions see Detail F on Sheet 6 of the Road Plans.
2. Reinforcing Not Shown for Clarity.

SECTION D–D

Scale: 1"=1'-0"

BILL OF MATERIALS FOR CONCRETE RAILING @ WINGWALL 'B'

EPOXY COATED REINF. STL.

MARK / SIZE	NO. REQ'D	LENGTH	WEIGHT (LBS)
580dEC	106	4'-10"	
Total #5EC Bars			534
#4EC	8	34'-7"	
Total #4EC Bars			185
Total Epoxy Coated Reinf. Steel			719

MISCELLANEOUS

Concrete, Class "C" in Railing	4.4 CYS
Surface Seal	300 SFT

Quantities in Bill of Materials are for One Concrete Railing Only.

BILL OF MATERIALS FOR CONCRETE RAILING @ WINGWALL 'H'

EPOXY COATED REINF. STL.

MARK / SIZE	NO. REQ'D	LENGTH	WEIGHT (LBS)
580dEC	125	4'-10"	
Total #5EC Bars			630
#4EC	8	41'-1"	
Total #4EC Bars			220
Total Epoxy Coated Reinf. Steel			850

MISCELLANEOUS

Concrete, Class "C" in Railing	5.2 CYS
Surface Seal	356 SFT

Quantities in Bill of Materials are for One Concrete Railing Only.

BILL OF MATERIALS FOR CONCRETE RAILING @ WINGWALL 'C' & 'E'

EPOXY COATED REINF. STL.

MARK / SIZE	NO. REQ'D	LENGTH	WEIGHT (LBS)
580dEC	62	4'-10"	
Total #5EC Bars			313
#4EC	8	20'-0"	
Total #4EC Bars			107
Total Epoxy Coated Reinf. Steel			420

MISCELLANEOUS

Concrete, Class "C" in Railing	2.6 CYS
Surface Seal	176 SFT

Quantities in Bill of Materials are for One Concrete Railing Only.

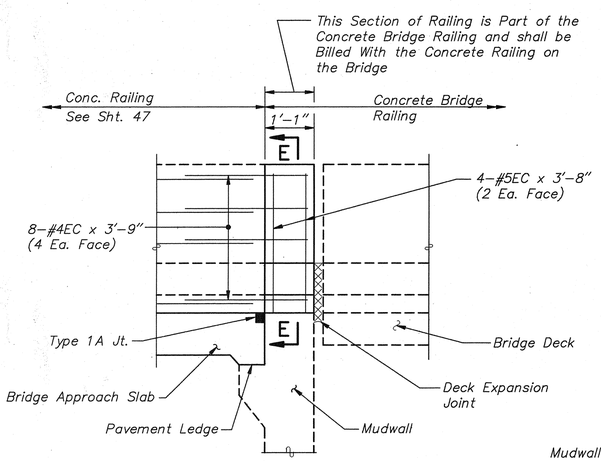

PART ELEVATION

Scale: 3/4"=1'-0"

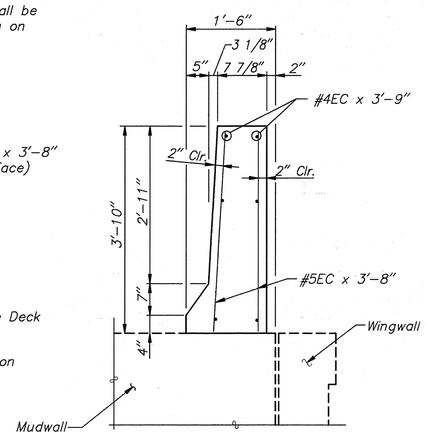

SECTION E–E

Scale: 3/4"=1'-0"

DETAILS AT DECK EXPANSION JOINT

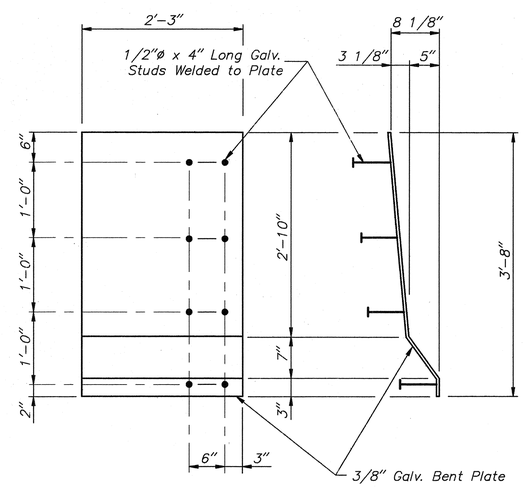

BENT PLATE DETAIL (A36)

Scale: 1"=1'-0"

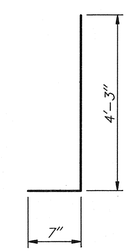

580dEC x 4'-10"

CONCRETE RAILING DETAILS

INDIANA DEPARTMENT OF TRANSPORTATION

HANCOCK COUNTY

SCALE: – AS NOTED DATE: – AUGUST,

DRAWING: – S47 OF 48 SHEET: – 48 OF 57

PROJECT: –IM/70–4 (064) STATION: –

BRIDGE CONTRACT NO. R–21474

BRIDGE FILE: – I–70–115–5140B & I–70–115–5140JB

FARID BEZESHK REGISTERED No. 8800 STATE OF INDIANA PROFESSIONAL ENGINEER 8.30.94

DRAWN	Jlm	CK'D	LMK
DESIGNED	LMK	CK'D	MAK
TRACED		CK'D	

JOB NAME: I-70 EAST OF S.R.9 (BRIDGE #5140)
JOB # 9361220400
CAD FILENAME: C:\9361220400\S5140B11.DWG
LAST REVISION DATE: 08/11/94
OPERATORS INITIALS: JLM

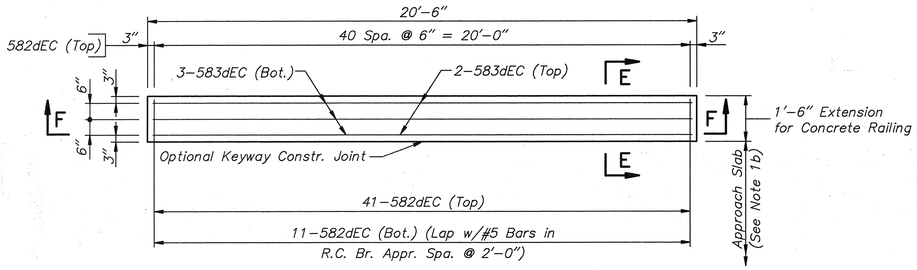

PLAN
Scale: None

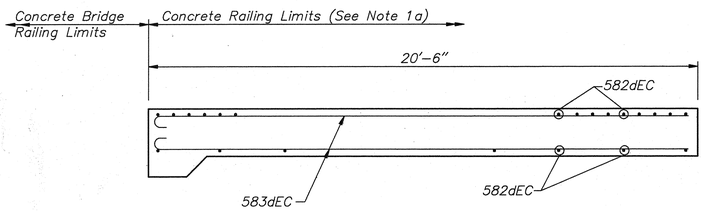

SECTION F-F
Scale: None

APPROACH SLAB EXTENSION DETAILS FOR CONCRETE RAILING @ WINGWALL 'C' & 'E'

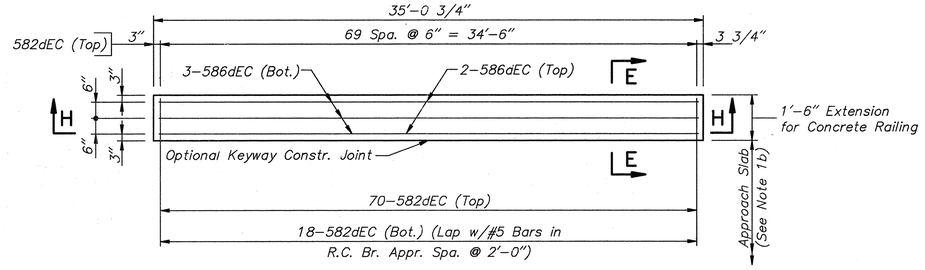

PLAN
Scale: None

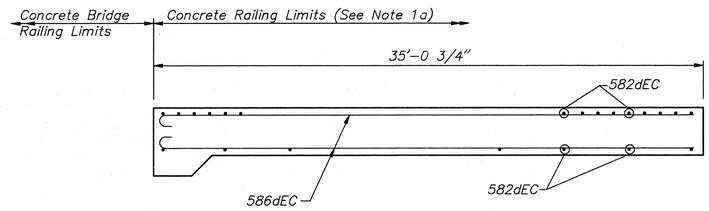

SECTION H-H
Scale: None

APPROACH SLAB EXTENSION DETAILS FOR CONCRETE RAILING @ WINGWALL 'B'

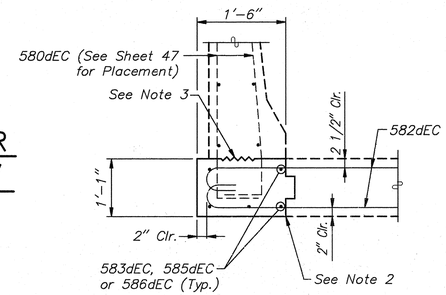

SECTION E-E
Scale: 3/4"=1'-0"

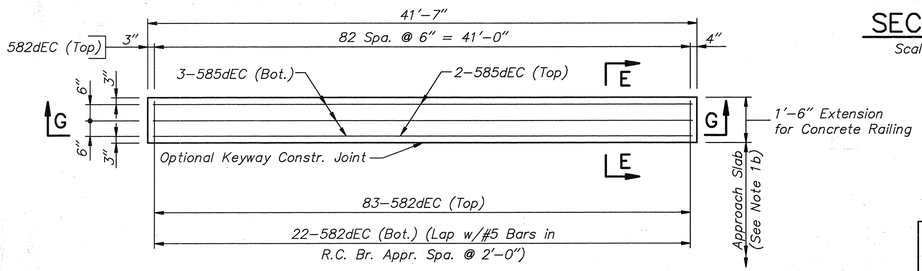

PLAN
Scale: None

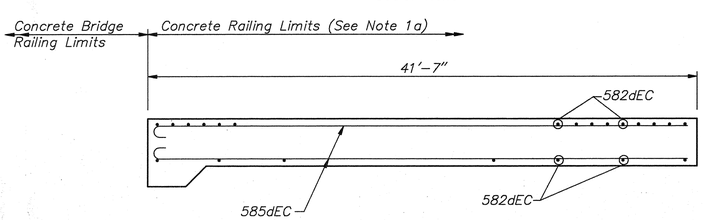

SECTION G-G
Scale: None

APPROACH SLAB EXTENSION DETAILS FOR CONCRETE RAILING @ WINGWALL 'H'

DRAWN Jlm	C'K'D LMK
DESIGNED LMK	C'K'D MAK
TRACED	C'K'D

JOB NAME: I-70 EAST OF S.R.9 (BRIDGE #5140)
JOB # 9361220400
CAD FILENAME: C:\2\93204810.DWG
LAST REVISION DATE: 08/11/94
OPERATORS INITIALS: JJM

BILL OF MATERIALS FOR APPROACH SLAB EXTENSION @ WINGWALL 'C' & 'E'

EPOXY COATED REINF. STL.

MARK / SIZE	NO. REQ'D	LENGTH	WEIGHT (LBS)
582dEC	52	6'-7"	
583dEC	5	20'-7"	
Total #5EC Bars			464
Total Epoxy Coated Reinf. Steel			464

MISCELLANEOUS

13" Reinf. Cement Conc. Pvmt.	3.4 SYS

Quantities in Bill of Materials are for One Approach Slab Extension Only.

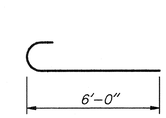

582dEC x 6'-7"

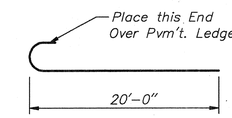

583dEC x 20'-7"

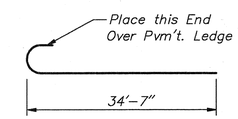

586dEC x 35'-2"

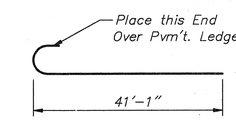

585dEC x 41'-8"

BILL OF MATERIALS FOR APPROACH SLAB EXTENSION @ WINGWALL 'H'

EPOXY COATED REINF. STL.

MARK / SIZE	NO. REQ'D	LENGTH	WEIGHT (LBS)
582dEC	105	6'-7"	
585dEC	5	41'-8"	
Total #5EC Bars			938
Total Epoxy Coated Reinf. Steel			938

MISCELLANEOUS

13" Reinf. Cement Conc. Pvmt.	6.9 SYS

Quantities in Bill of Materials are for One Approach Slab Extension Only.

BILL OF MATERIALS FOR APPROACH SLAB EXTENSION @ WINGWALL 'B'

EPOXY COATED REINF. STL.

MARK / SIZE	NO. REQ'D	LENGTH	WEIGHT (LBS)
582dEC	88	6'-7"	
586dEC	5	35'-2"	
Total #5EC Bars			788
Total Epoxy Coated Reinf. Steel			788

MISCELLANEOUS

13" Reinf. Cement Conc. Pvmt.	5.8 SYS

Quantities in Bill of Materials are for One Approach Slab Extension Only.

NOTES:

1. This Sheet shall be used in Conjunction with Concrete Railing Details on Sheet 47 and Standard Pavement Joints Sheet "B" as Follows:
   a) The Details for the Concrete Railing shall be as Shown on Sheets 47 & 48.
   b) The Details for the Bridge Approach Slab shall be as shown on Sheet 46 and Standard Pavement Joints Sheet "B".
2. Optional Nominal 2"x4" Keyway Construction Joint.
3. Type "A" Construction Joint.
4. Type "IA" Joint.

CONCRETE RAILING DETAILS
INDIANA DEPARTMENT OF TRANSPORTATION
HANCOCK COUNTY
SCALE: - AS NOTED DATE: - AUGUST, 1994

FARID PEZESHK REGISTERED No. 35017147 STATE OF INDIANA PROFESSIONAL ENGINEER 8-30-94

DRAWING: - S48 OF 48 SHEET: - 49 OF 57
PROJECT: -IM/70-4 (064) STATION: -
BRIDGE CONTRACT NO. R-21474
BRIDGE FILE: - I-70-115-5140B & I-70-115-5140JB

STRUCTURE QUANTITIES

BRIDGE FILE	ITEM	CONCRETE CLASS C SUPERST CU. YDS.	CONCRETE CLASS A SUBSTR CU. YDS.	CONCRETE CLASS B CU. YDS.	SHEAR STUDS EACH	13" R.C.C. PVMT SQ. YD.	TYPE O COMP. AGG. FOR BASE TON	CONCRETE RAILING CLASS C CU. YDS.	PAVEMENT REMOVE SQ. YD.	REINF. STEEL TOTAL LBS.	STRUCT. STEEL *** LBS.	EPOXY COATED REINF. STEEL LBS.	CAST IRON GRATES, BASINS, & FITTINGS LBS.	PILES EPOXY COATED SHELLS NO.	PILES EPOXY COATED SHELLS LIN. FT.	PILES TREATED TIMBER NO.	PILES TREATED TIMBER LIN. FT.	PILES STEEL ENCASED CONC. NO.	PILES STEEL ENCASED CONC. LIN. FT.	PILES STEEL H BEARING NO.	PILES STEEL H BEARING LIN. FT.	CAST IRON DRAIN PIPE LBS.	CONC. BR. RAILING TRANS. TGB EACH	PARTIAL DEPTH BRIDGE DECK PATCHING SQ. FT.	FULL DEPTH BRIDGE DECK PATCHING SQ. FT.	BRIDGE DECK OVERLAY PATCHING SQ. FT.	CURB TURNOUT REMOVE EACH	CURB CONCRETE REMOVE LIN. FT.	FIELD DRILLED HOLES EACH	BRIDGE DECK OVERLAY REMOVAL SQ. YD.	BRIDGE DECK OVERLAY SQ. YD.	ADDITIONAL BRIDGE DECK OVERLAY CU. YD.	TYPE T ELASTOMERIC BEARING ASSEMBLY EACH	POLYMER MODIFIED ASPHALT EXP. JOINT LIN. FT.	SURFACE SEAL * SQ. FT.	SURFACE MILLING SQ. YD.		FIELD DRILLED HOLES IN CONC. EACH	BARRIER DELINEATORS EACH
I-70-115-5140JB & I-70-113-5137B, I-70-115-5140B	I-70-109-5133B																																							
	SUPERSTRUCTURE	8.0						9.0				2,943														150					41				9,475			518	20
	APPROACHES					564	188	16.8	558	13,866		5,592																							1,694			24	
	I-70-111-5135B																																							
	SUPERSTRUCTURE	6.8						27.0				4,787												260						540	575	1.6			2,721	540		484	20
	APPROACHES					385	128	10.4	360	8,572		5,036											4				2	41							704				
	I-70-113-5137B																																							
	SUPERSTRUCTURE	6.8						33.6				6,625	384									75		970	70					680	716	6.0			3,400	680		548	24
	APPROACHES					385	128	10.4	360	8,572		5,036											4					82							704				
	I-70-115-5140B & I-70-115-5140JB																																							
	BENT 1	16.1	15.2									4,715						2	64															18	759			284	
	PIER 2		58.2	32.7						13,161								9	99																130			32	
	PIER 3		60.4	58.8						17,099								12	132																130			32	
	BENT 4	16.1	15.2									4,715						2	90															18	759			284	
	SUPERSTRUCTURE	569.7			7,398			107.3			68,100	147,477	768									220							48					212	29,855				52
	APPROACHES					679	216	14.8	543	16,406		6,563											4					115							1,008				
I-70-109-5133B, I-70-111-5135B, I-70-113-5137B, I-70-115-5140B & I-70-115-5140JB	Reinf. Steel for R.C. Bridge Approaches																																							
	Totals	623.5	149.0	91.5	7,398	2,013	660	229.3	1,821	77,676	68,100	193,489	1,152					25	385			295	12	1,230	70	150	2	238	48	1,220	1,332	7.6	36	212	51,339	1,220		2,206	116

APPROACH STRUCTURES

BRIDGE FILE	STRUCT. NO.	LOCATION	DESCRIPTION SIZE	DESCRIPTION KIND	LENGTH LIN. FT.	CONC. CL. A IN STRS. CU. YDS.	REINF. STEEL LBS.	PIPE END SEC. EACH		REMARKS
					TOTALS					Total of Reinforcing Steel Carried to "Structure Quantities"

PAVED SIDE DITCH & SODDING SUMMARY

LT. OR RT.	STATION TO STATION	PAVED SIDE DITCH (LIN. FT.) TYPE	PAY LENGTH	NO. OF LUGS	PAY LENGTH	CUT OFF WALLS	PAY LENGTH	TOTAL PAY LENGTH	SODDING (SQ. YD.) FOR PSD	FOR DITCHES	SHOULDERS	OTHER	TOTAL SOD

* The Quantity of Surface Seal is Approximate Only. It Shall be the Contractor's Responsibility to Determine the Quantity on which He Bases His Bid.

APPROACH TABLE

LOCATION LT/RT	LOCATION STATION	DESCRIPTION	WIDTH FT.	RADII FT.	GRADE %	LENGTH FT.	WIDTH BEYOND R/W FT.	EXCAVATION (CYS) CUT	EXCAVATION (CYS) FILL	BITUM. SURFACE #/SQ.YD.	BITUM. SURFACE TONS	BIUM. BINDER #/SQ.YD.	BIUM. BINDER TONS	BITUM. BASE #/SQ.YD.	BITUM. BASE TONS	COMP AGG. BASE DEPTH (IN)	COMP AGG. BASE TONS

NOTES:
Weight of Spirals includes weight of 1 1/2 extra turns top and bottom.
Spacers and 1 1/2 turns at laps included in cost of spiral.
*** The weight of structural steel is approximate only, and it shall be the Contractor's responsibility to determine the weight on which he bases his bid.
For Test Bar Samples See Bridge Standard C1.

SUMMARIZED LMK C'K'D MAK
TRACED Jlm C'K'D MAK

REVISIONS

DATE	ITEM

BRIDGE SUMMARY

INDIANA DEPARTMENT OF TRANSPORTATION

DATE AUGUST, 1994

SHEET 50 OF 57

PROJECT: IM/70-4 (064)
CONTRACT NO: R-21474
BRIDGE FILE: I-70-109-5133B
I-70-111-5135B
I-70-113-5137B
I-70-115-5140B & I-70-115-5140JB

FARID PEZESHK REGISTERED No. 890147 STATE OF INDIANA PROFESSIONAL ENGINEER

JOB NAME I-70 E. OF S.R.9 (BRIDGE #5137)
JOB # 9362120A0
LAST REVISED 08/23/94 09:37
LAST ELEVATED DATE/ 08/23/94
OPERATORS INITIALS JJB