CONTRACT No. B-18969

BRIDGES OVER 20' SPAN					
FEDERAL REGION NO.	STATE	PROJECT NO.	FISCAL YEAR	SHEET NO.	TOTAL SHEETS
5	IND.	M-T610(1)	1990	1	92

INDEX

PROJECT	STRUCTURE	TYPE	SPAN	OVER	STATION
BRM-M-T610(1)	40-84-7279 WBL & EBL	CONT. COMPOSITE WELDED STEEL PLATE GIRDER	7 SPANS 105',(2)130',150' (2)130',105'	WABASH RIVER	"WBL"- Skewed 15° Rt. "EBL"- Skewed 15° Rt. 64+58.00

SHEET NO.	SHEET DESIGNATION	SUBJECT	F.H.W.A. APPROVAL
1	ONE SHEET	TITLE SHEET & INDEX	
2-4	THREE SHEETS	TYPICAL CROSS SECTIONS	
5-6	TWO SHEETS	SUPERELEVATION TRANSITIONS	
7-11A	SIX SHEETS	ROAD PLAN DETAILS (For Information Only)	
12-17	SIX SHEETS	ROAD PROFILES (For Information Only)	
18-21	FOUR SHEETS	WATER MAIN DETAILS (Deleted)	
22-25	FOUR SHEETS	SOIL BORINGS	
26-27	S1 - S2	LAYOUT SHEET WBL	
28-29	S3 - S4	GENERAL PLAN WBL	
30-31	S5 - S6	END BENT NO. 1 WBL DETAILS	
32	S7	PIER NO. 2 WBL DETAILS	
33	S8	PIER NO. 3 WBL DETAILS	
34	S9	PIER NO. 4 WBL DETAILS	
35	S10	PIER NO. 5 WBL DETAILS	
36	S11	PIER NO. 6 WBL DETAILS	
37	S12	PIER NO. 7 WBL DETAILS	
38-39	S13 - S14	END BENT NO. 8 WBL DETAILS	
40	S15	FLOOR WBL DETAILS	
41-42	S16 - S17	LAYOUT SHEET EBL	
43-44	S18 - S19	GENERAL PLAN EBL	
45-46	S20 - S21	END BENT NO. 1 EBL DETAILS	
47	S22	PIER NO. 2 EBL DETAILS	
48	S23	PIER NO. 3 EBL DETAILS	
49	S24	PIER NO. 4 EBL DETAILS	
50	S25	PIER NO. 5 EBL DETAILS	
51	S26	PIER NO. 6 EBL DETAILS	
52	S27	PIER NO. 7 EBL DETAILS	
53-54	S28 - S29	END BENT NO. 8 EBL DETAILS	
55	S30	FLOOR EBL DETAILS	
55A	S30A	ADDITIONAL FLOOR DETAILS	
56-57	S31 - S32	FRAMING PLAN	
58-59	S33 - S34	STRUCTURAL STEEL DETAILS -Including 58A(S33A) & 58B(S33B)	
60	S35	BEARING ASSEMBLY DETAILS	
61	S36	CONCRETE BARRIER RAIL DETAILS	
62	S37	EXPANSION JOINT DETAILS	
63	ONE SHEET	BRIDGE SUMMARY	
64-76	THIRTEEN SHEETS	CROSS SECTIONS, Line "A"	
77	ONE SHEET	CROSS SECTIONS, Line "AL & PR-1"	
78-79	TWO SHEETS	CROSS SECTIONS, Line "AR & PR-2"	
80-81	TWO SHEETS	CROSS SECTIONS, Line "T-1-A"	
82	ONE SHEET	CROSS SECTIONS, Line "T-2-A"	
83-86	FOUR SHEETS	CROSS SECTIONS, Line "T-3-A"	

TRAFFIC DATA		
A.D.T. (1990)		16,975 V.P.D.
A.D.T. (2010 PROJECTED)		22,509 V.P.D.
D.H.V. (2010 PROJECTED)		2,083 V.P.H.
TRUCKS		D.H.V. 9 % A.D.T. 12 %
DESIGN SPEED		* M.P.H.
ACCESS CONTROL		
FUNCTIONAL CLASSIFICATION		URBAN ARTERIAL

* 40 M.P.H. FOR STR. & APPR. TO WEST OF STR.
30 M.P.H. FOR APPR. EAST OF STR.

PLANS PREPARED BY:

GANNETT FLEMING TRANSPORTATION ENGINEERS, INC.
INDIANAPOLIS, INDIANA

Certified: Harry C. Klee
Date: 7/18/90

HARRY C. KLEE REGISTERED No. 1389 STATE PROFESSIONAL ENGINEER

NOTE:
WHENEVER M-T610 (1) APPEARS IN THESE PLANS OR CONTRACT DOCUMENTS IT SHALL BE INTERPRETED AS BRM-M-T610 (1)

INDIANA DEPARTMENT OF TRANSPORTATION

BRIDGE PLANS

FOR SPANS OVER 20 FEET ON

U.S. ROUTE 40

PROJECT NO. ( ) P.E. ( ) R/W BRM-M-T610(1) CONST

Beginning at the point approximately 472.48 feet west and 56.73 feet north of the intersection of existing highway U.S. 40 with the centerline of the Wabash River in the city of West Terre Haute, in the SW quarter, Section 21, T12N, R9W, and extending in a northeasterly direction along line "PR-1" crossing the Wabash River in a 15° left skew to the existing structure to a point which lies approximately 493.45 feet east of the centerline of the Wabash River. Also, beginning at a point approximately 472.48 feet west and 62.94 feet south of the intersection of existing highway U.S. 40 with the centerline of the Wabash River in the city of West Terre Haute, in the SW quarter, Section 21, T12N, R9W, and extending in a southeasterly direction along line "PR-2" crossing the Wabash River on a 15° right skew to the existing structure to a point which lies approximately 493.45 feet east of the centerline of the Wabash River. All in Section 21, T12N, R9W, Vigo County, Indiana.

BRIDGE	LENGTH:	0.168	MI.
ROADWAY	LENGTH:	0.315	MI.
TOTAL	LENGTH:	0.483	MI.
MAX.	GRADE :	3.96	%

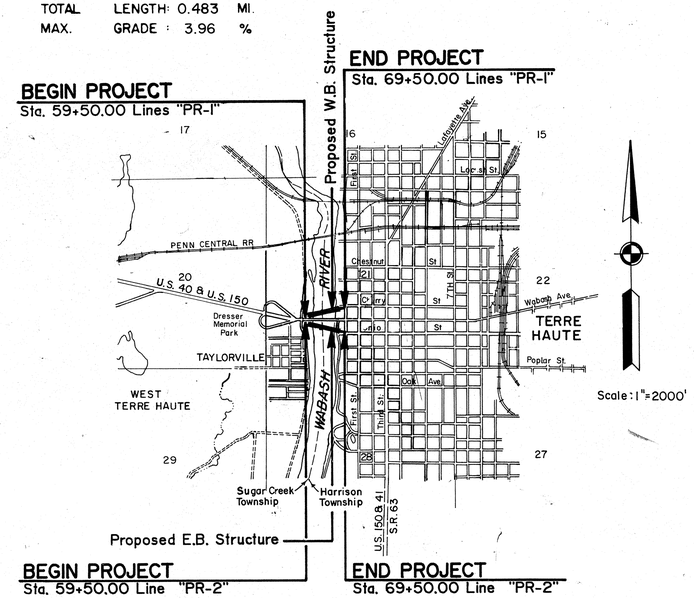

SUGAR CREEK & HARRISON TOWNSHIPS
VIGO COUNTY

INDEX CONTINUED
STANDARD DRAWINGS

SHEET NO.	SHEET DESIGNATION	SUBJECT	F.H.W.A. APPROVAL	ADOPTED "A" REVISION "R"
	BRIDGE STD. BR1	ALUMINUM BRIDGE RAILING		
	BRIDGE STD. BR2	ALUMINUM BRIDGE RAILING DETAILS		
	BRIDGE STD. BR3	STEEL BRIDGE RAILING		
	BRIDGE STD. BR4	STEEL BRIDGE RAILING DETAILS		
87	BRIDGE STD. BR5	RAILING CONNECTION DETAILS	1-22-87	R 12-01-86
	BRIDGE STD.			
88	BRIDGE STD. C1	MISCELLANEOUS DETAILS	7-13-88	R 6-01-88
	BRIDGE STD. C2	MISCELLANEOUS DETAILS		
89	BRIDGE STD. C3	MISCELLANEOUS DETAILS	1-26-88	R 11-02-87
	BRIDGE STD. C4	MISCELLANEOUS DETAILS		
90	BRIDGE STD. D	CASTING DETAILS ROADWAY DRAINS	1-11-89	R 9-1-88
	BRIDGE STD. D1	ADJUSTING FRAME DETAILS FOR ROADWAY DRAINS		
	BRIDGE STD.			
	BRIDGE STD. PB	PRESTRESSED CONCRETE TYPE I-BEAMS		
	BRIDGE STD. PB	PRESTRESSED CONCRETE TYPE I-BEAMS		
	BRIDGE STD. PB6	PRESTRESSED BOX BEAMS		
	BRIDGE STD. PB	PRESTRESSED COMPOSITE BOX BEAMS WIDE		
	BRIDGE STD. PB	PRESTRESSED COMPOSITE BOX BEAMS WIDE		
	BRIDGE STD. PB10	TOLERANCES FOR FABRICATION OF PRESTRESSED BEAMS		
	BRIDGE STD. PB11	ELASTOMERIC BEARING PAD DETAILS		
	BRIDGE STD.			
	BRIDGE STD.			
	BRIDGE STD. R2A	BRIDGE LIGHTING DETAILS		
91	BRIDGE STD. R2B	BRIDGE LIGHTING DETAILS	5-19-88	R 4-4-88
92	BRIDGE STD. S1	MISCELLANEOUS DETAILS	1-22-87	R 12-01-86
	BRIDGE STD. SH1	STEEL SHOE DETAILS		
	BRIDGE STD. T SHEET A	STANDARD TEMPORARY BRIDGE		
	BRIDGE STD. T SHEET B	STANDARD TEMPORARY BRIDGE		
	BRIDGE STD.			
	BRIDGE STD.			
	BRIDGE STD.			
	BRIDGE STD.			
	BRIDGE STD.			
	ROAD STD. SHEET A	STANDARD PAVEMENT JOINTS		
	ROAD STD. SHEET B	STANDARD PAVEMENT JOINTS		
	ROAD STD. SHEET	MISCELLANEOUS STANDARDS		
	ROAD STD. SHEET	MISCELLANEOUS STANDARDS		
	ROAD STD. SHEET	MISCELLANEOUS STANDARDS		
	ROAD STD. SHEET	MISCELLANEOUS STANDARDS		
	ROAD STD. SHEET	MISCELLANEOUS STANDARDS		
	ROAD STD. SHEET	MISCELLANEOUS STANDARDS		
	ROAD STD. SHEET	MISCELLANEOUS STANDARDS		
	ROAD STD. SHEET	MISCELLANEOUS STANDARDS		
	ROAD STD. SHEET	MISCELLANEOUS STANDARDS		
	ROAD STD. SHEET	MISCELLANEOUS STANDARDS		
	ROAD STD. SHEET	MISCELLANEOUS STANDARDS		
	ROAD STD. SHEET	MISCELLANEOUS STANDARDS		
	ROAD STD. SHEET	MISCELLANEOUS STANDARDS		
	ROAD STD. SHEET	MISCELLANEOUS STANDARDS		
	ROAD STD. SHEET	MISCELLANEOUS STANDARDS		
	ROAD STD. SHEET	MISCELLANEOUS STANDARDS		
	ROAD STD. SHEET	MISCELLANEOUS STANDARDS		
	ROAD STD. SHEET GR	GUARD RAIL CLASS		
	ROAD STD. SHEET GR	GUARD RAIL CLASS		
	ROAD STD. SHEET GR	GUARD RAIL CLASS		
	ROAD STD. SHEET GR	GUARD RAIL CLASS		
	ROAD STD. SHEET GR5	ALUMINUM GUARD RAIL DETAILS		
	ROAD STD. SHEET GR6	STEEL TUBE GUARD RAIL DETAILS		
	ROAD STD. SHEET GR7	GUARD RAIL PIER CONNECTION DETAILS		
	ROAD STD. SHEET GR8	STEEL BEAM GUARD RAIL		
	ROAD STD. SHEET GR9	ALUMINUM BEAM GUARD RAIL		
	ROAD STD. SHEET GR10	GUARD RAIL BURIED ENDS		
	ROAD STD. SHEET GR10A	GUARD RAIL BREAKAWAY CABLE TERM.		
	ROAD STD.			
	ROAD STD. SHEET CB2	TEMPORARY CONCRETE BARRIER		
		TRAFFIC SIGN DETAILS		
	ROAD STD. SHEET 1 DETOURS	STANDARD DETOUR SIGNS		
	ROAD STD. SHEET 1A DETOURS	STANDARD DETOUR SIGNS		
	ROAD STD. SHEET 1B DETOURS	STANDARD DETOUR SIGNS		
	ROAD STD. SHEET 2 DETOURS	STANDARD DETOUR SIGNS		
	ROAD STD. SHEET 2A DETOURS	STANDARD DETOUR SIGNS		
	ROAD STD. SHEET 3 DETOURS	STANDARD DETOUR SIGNS		
	ROAD STD. SHEET 3A DETOURS	STANDARD DETOUR SIGNS		
	ROAD STD. SHEET 4 DETOURS	STANDARD DETOUR SIGNS		
	ROAD STD. SHEET 5 DETOURS	STANDARD DETOUR SIGNS		
	ROAD STD. SHEET 5A DETOURS	STANDARD DETOUR SIGNS		

* F.H.W.A. APPROVAL PENDING

Recommended for Approval: _____ Date
Bridge Engineer

HASMUKH C. PATEL REGISTERED No. 19 STATE PROFESSIONAL ENGINEER

Approved: 8-8-90 Date
Chief, Division of Design

Recommended for Approval: 8-8-90 Date
Design Consultant Services Manager

DAVID W. PLUCKEBAUM REGISTERED No. 20674 STATE OF INDIANA PROFESSIONAL ENGINEER

FEDERAL HIGHWAY ADMINISTRATION
DEPARTMENT OF TRANSPORTATION
APPROVED:
DIVISION ADMINISTRATOR DATE

BRIDGE FILE: 40-84-7279

INDIANA DEPARTMENT OF HIGHWAYS
STANDARD SPECIFICATIONS DATED 1988
TO BE USED WITH THESE PLANS.
Das. 59610

REVISIONS	
DATE	SHEET NO.
4-91	1,55,57,58,59, & 60; 58A & 58B ADDED
"	1,5,6,7,8,9,10,11 & 59
"	1,62; 55A ADDED
"	1, 28,29,43,44
6/19/91	28,29,43,44,63
8/23/91	1,40,55,61,62,63

REVISIONS	
DATE	SHEET NO.

SF-22427

TP100

FEDERAL ROAD DIVISION NO.	STATE	PROJ. NO.	FISCAL YEAR	SHEET NO.	TOTAL SHEETS
5	IND.	M-T610(1)	1990	~~3~~ 2	~~130~~ 92

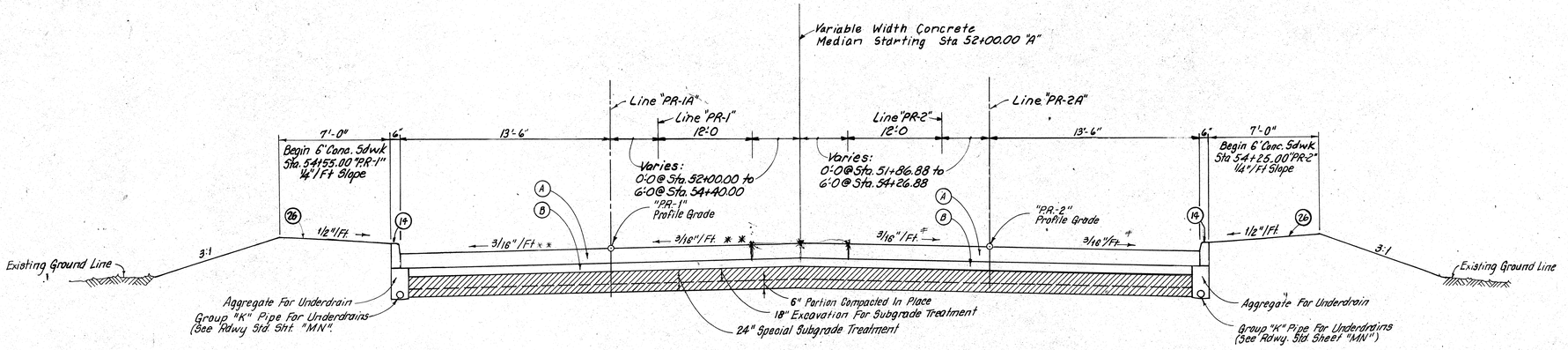

"P. R. - 1" & "P. R. - 2" TANGENT SECTION

Sta. 52+00.00 "PR-1" To Sta. 54+55.75 "PR-1"
(**) Left Half in Transition From Sta. 54+55.75 to Sta. 56+40.75

Sta. 51+86.88 "PR-2" To Sta. 56+93.23 "PR-2"
Right Half in Transition From Sta. 56+93.23 to Sta. 58+78.23

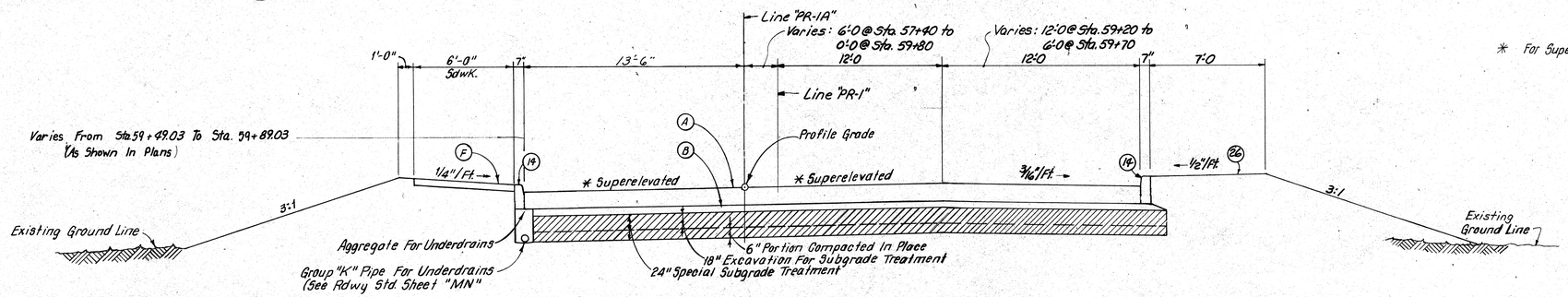

"P. R. - 1" SUPERELEVATED SECTION

Sta. 56+40.75 "PR-1" To Sta. 59+88.90 "PR-1" (Bridge)

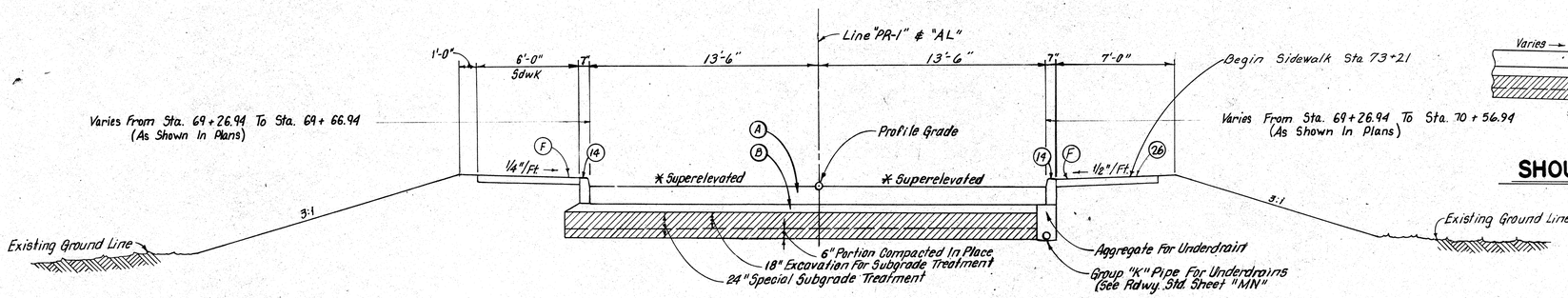

"P. R. - 1" SUPERELEVATED SECTION

Sta. 69+27.63 "PR-1" (Bridge) To Sta. 75+00.00 Line "AL"

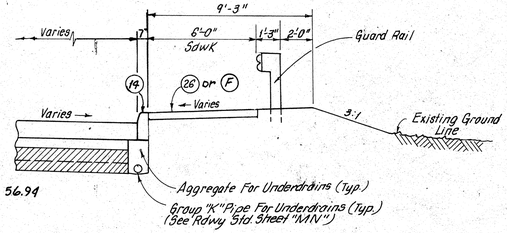

SHOULDER WITH GUARD RAIL DETAIL

LEGEND

- (A) 10" Plain Concrete Pavement
- (B) 6" Special Subbase ##
- (F) 4" Concrete Sidewalk
- (14) Integral Concrete Curb
- (26) Sod
- ## Random Skewed type D-1 Construction joints (Note: Joint Skew shall be 4' in 24' and random joint spacing shall be 19'-18'-12'-13')

NOTE

* For Superelevation Transition See Sheet No. 5-6

INDIANA DEPARTMENT OF ~~HIGHWAYS~~ TRANSPORTATION

TYPICAL CROSS SECTIONS

SCALE:- Not to Scale

HENRY C. RHEE REGISTERED No. 13692 STATE OF INDIANA PROFESSIONAL ENGINEER

Contr. No. B-18969

SF-22397

TP110

FEDERAL ROAD DIVISION NO.	STATE	PROJ. NO.	FISCAL YEAR	SHEET NO.	TOTAL SHEETS
5	IND.	M-T610( )	1990	~~4~~ 3 92	~~130~~

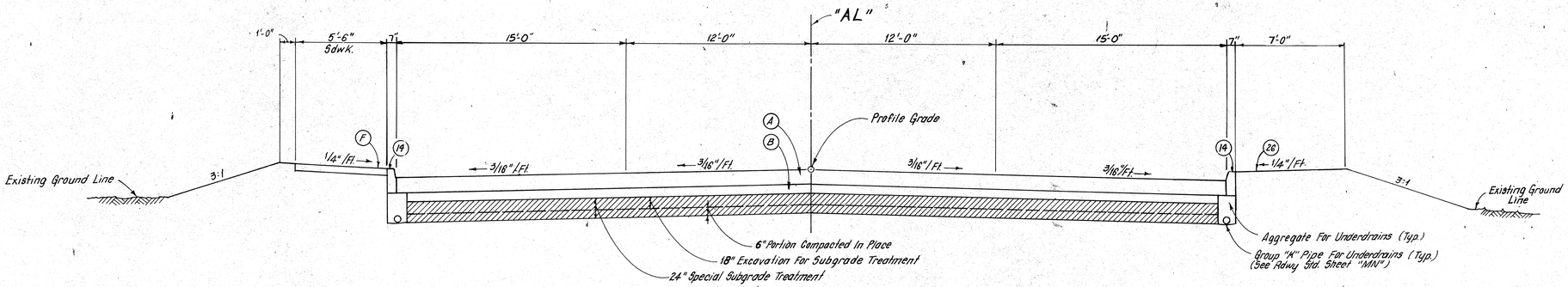

LINE "AL" TANGENT SECTION

Sta. 75 + 00.00 Line "AL" To Sta 77 + 00.00 Line "AL"

LEGEND

- (A) 10" Plain Concrete Pavement
- (B) 6" Special Subbase ##
- (F) 4" Concrete Sidewalk
- (14) Integral Concrete Curb
- (26) Sod

NOTE

* For Superelevation Transition See Sheet No. 5-6

Random Skewed type D-1 Construction joints (Note: Joint skew shall be 4' in 24' and random joint spacing shall be 19'-18'-12'-13')

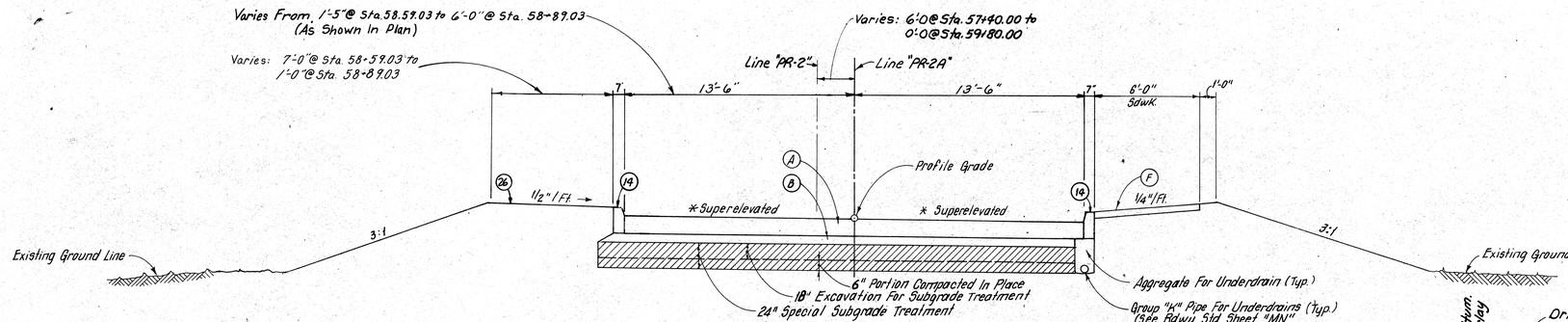

"P.R.-2" SUPERELEVATED SECTION

Sta. 58 + 78.23 "PR-2" To Sta. 59 + 88.90 "PR-2" (Bridge)

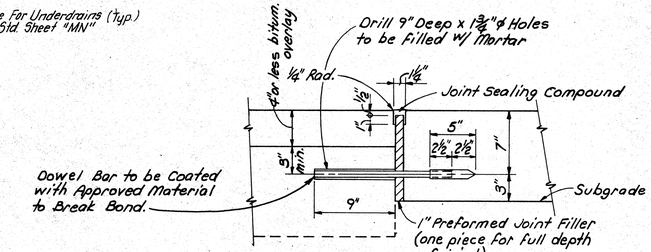

SECTION "A-A"

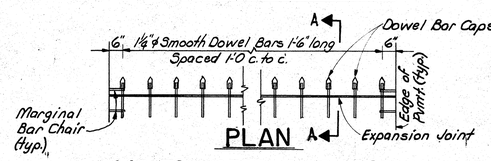

PLAN

LOAD TRANSFER JOINT AT BEGINNING & END OF PROJECT

No Scale

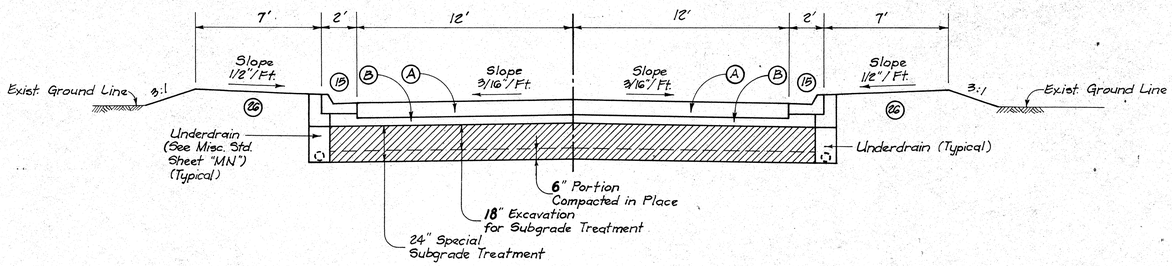

TYPICAL SECTION - WABASH AVE. & ALLEY

Sta. 71 + 84, Line "A" to Sta. 74 + 31, Line "A"

INDIANA DEPARTMENT OF ~~HIGHWAYS~~ TRANSPORTATION

TYPICAL CROSS SECTIONS

SCALE:- 1/4" = 1'-0" Unless Noted

HENRY C. RHEE REGISTERED No. 13692 STATE OF INDIANA PROFESSIONAL ENGINEER

Contr. No. B-18969

SF-22397

TP110

FEDERAL ROAD DIVISION NO.	STATE	PROJ. NO.	FISCAL YEAR	SHEET NO.	TOTAL SHEETS
5	IND.	M-T610(1)	1990	~~5~~ 4	~~130~~ 92

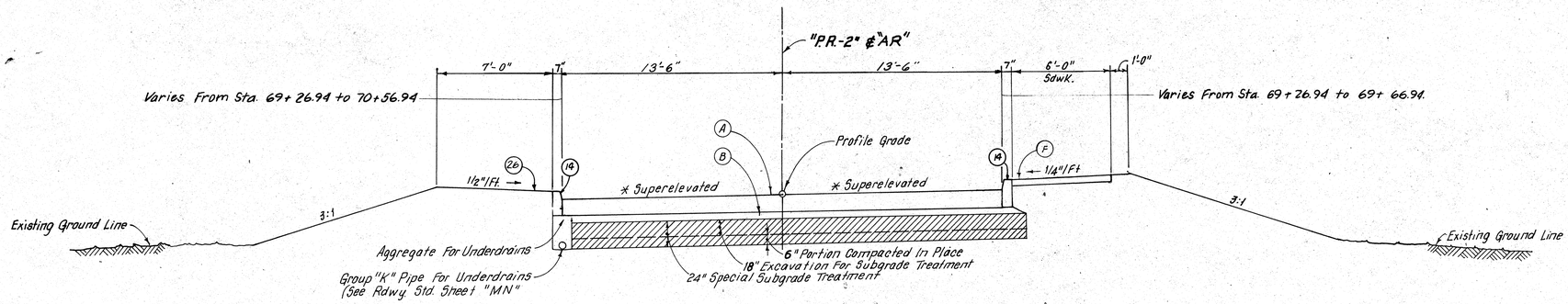

"P.R.-2" SUPERELEVATED SECTION

Sta. 69+27.63 "P.R.-2" (Bridge) To Sta. 75+00.00 Line "AR"

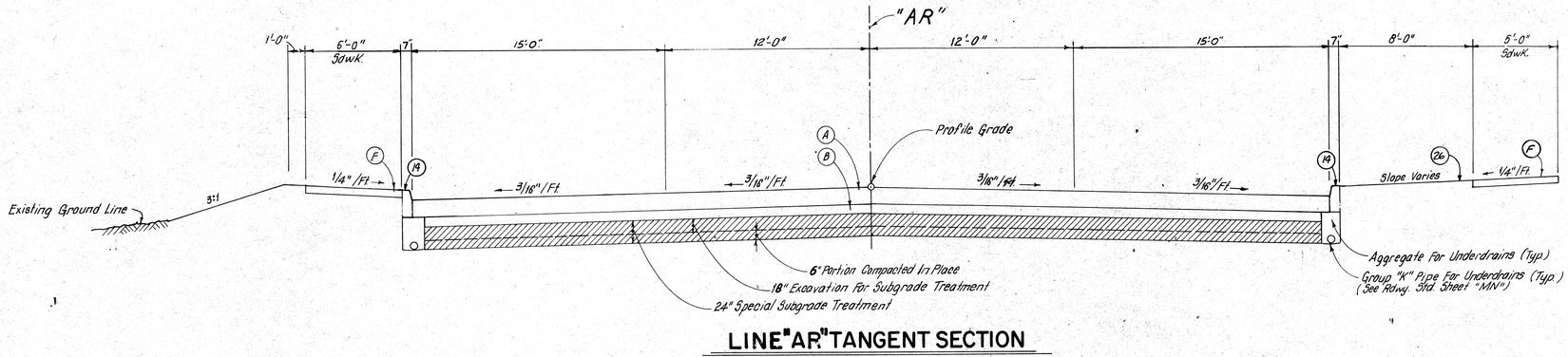

LINE "AR" TANGENT SECTION

Sta. 75+00.00 Line "AR" To Sta. 77+00.00 Line "AR"

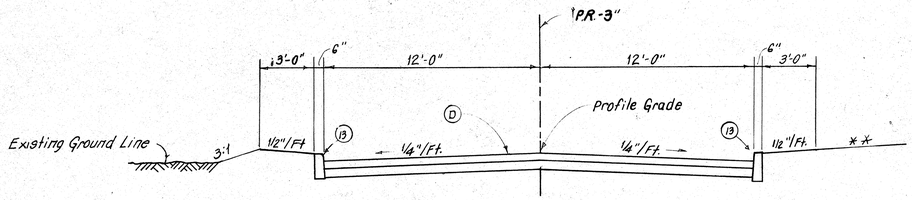

"P.R.-3" TANGENT SECTION

Sta. 10+25.93 "P.R.-3" To Sta. 13+50.19 "P.R.-3"

LEGEND

- (A) 10" Plain Concrete Pavement
- (B) 6" Special Subbase ##
- (J) 110#/Sys Bituminous Surface, HAE#11 or HAE#11 On 330#/Sys HAC or HAE Base On 6" Compacted Aggregate Base
- (F) 4" Concrete Sidewalk
- (13) Concrete Curb
- (14) Integral Concrete Curb
- ## Random skewed type D-1 Construction joints (Note: Joint skew shall be 4' in 24' and random joint spacing shall be 19'-18'-12'-13')

NOTE

* For Superelevation Transition See Sheet No. 6

** Slope Varies As Shown On Cross Sections.

INDIANA DEPARTMENT OF ~~HIGHWAYS~~ TRANSPORTATION

TYPICAL CROSS SECTIONS

SCALE:- 1/4" = 1'-0"

HENRY C. RHEE REGISTERED No. 13692 STATE OF INDIANA PROFESSIONAL ENGINEER

B-18969

SF-22397

TP110

CROSS SECTIONS

CUT FILL

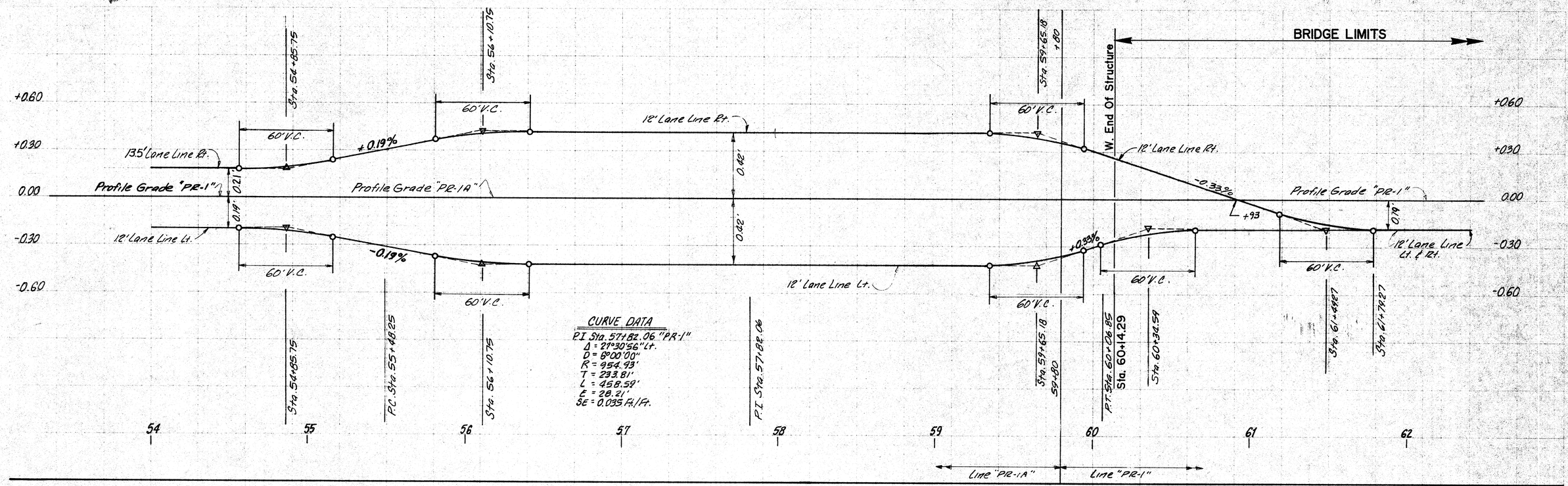

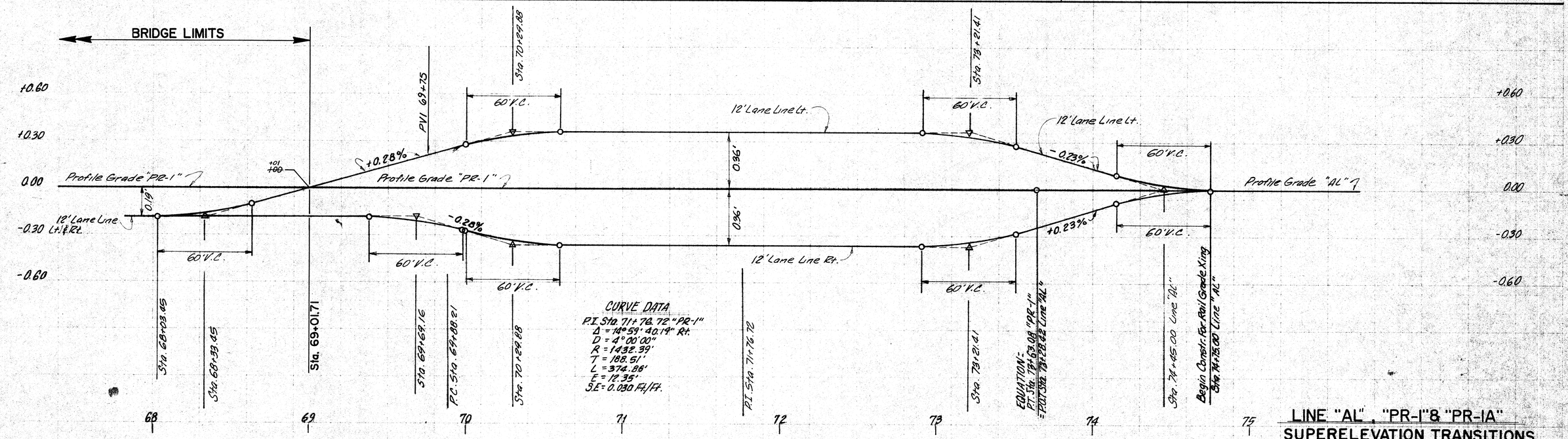

REV. 1-4-91 : SUPER TRANS. REVERSAL POINT STATION

LINE "AL", "PR-1" & "PR-1A"
SUPERELEVATION TRANSITIONS

Scales: Vertical 1" = 0.3'
Horizontal 1" = 30'

B-18969

LEVEL BOOK NO. BR-2938 FILE 40-84-7279

FEDERAL ROAD REGION NO.	STATE	PROJECT NO.	FISCAL YEAR	SHEET NO.	TOTAL SHEETS
5	IND.	M-T610(001)	1990	~~7~~	~~130~~

U.S. 40 Over The Wabash River LINE "PR-1" & "AL"

5 92

September 1973

CROSS SECTIONS

CUT FILL

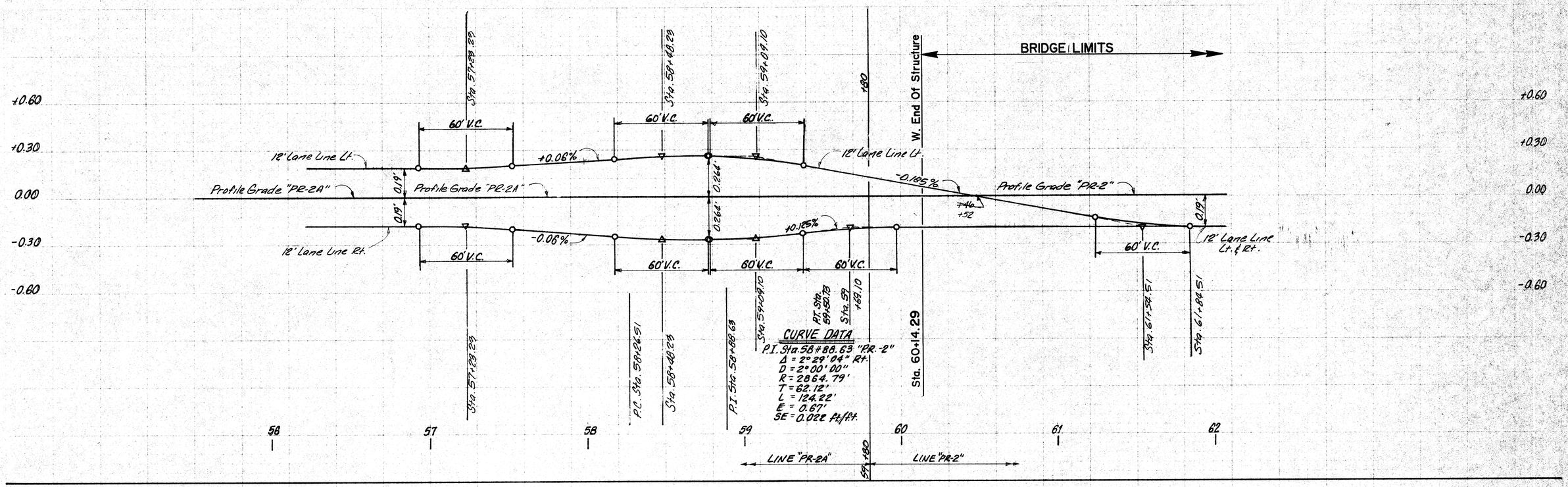

REV. 1-4-91: SUPER TRANS. REVERSAL POINT STATION

LINE "AR", "PR-2" & "PR-2A"
SUPERELEVATION TRANSITIONS

Scales: Vertical: 1" = 0.3'
Horizontal: 1" = 30'

September 1973

B-18969

LEVEL BOOK NO. BR-2938 FILE 40-84-7279

FEDERAL ROAD REGION NO.	STATE	PROJECT NO.	FISCAL YEAR	SHEET NO.	SHEETS
5	IND.	M-T 610(001)	1990	~~8~~	~~130~~

U.S. 40 Over The Wabash River LINE "PR-2" & "AR"

6 92

FEDERAL ROAD REGION NO.	STATE	PROJECT NO.	FISCAL YEAR	SHEET NO.	TOTAL SHEETS
5	IND.	M-T610(1)	1990	~~15~~ 7	~~130~~ 92

DETAILS

Scale: 1" = 20'

EXISTING BRIDGE

PROPOSED BRIDGE

NOTE: Existing Temporary Concrete Barrier Railing Shall be Removed by the Contractor and Stored As Directed by the Engineer.

FOR INFORMATION ONLY

Sec. 21, T-12-N R.-9-W
Sugar Creek Township
Vigo County

BENCH MARK

BM # 3 - "□" Cut in 8" Conc. Curb 25' Lt. Of Sta. 60+34. Line "A" (N.W. Cor. Bridge U.S. 40 Over Wabash River). Elev. 486.86

ALL R/W ON THIS SHEET TO BE AS SHOWN.

ALL R/W ON THIS SHEET NORTH OF U.S. 40 DESCRIBED FROM LINE "PR.-1"

ALL R/W ON THIS SHEET SOUTH OF U.S. 40 DESCRIBED FROM LINE "PR.-2"

Rev. 1-4-91: Horiz. Align. Control Points

1976

B-18969

HENRY C. RHEE — REGISTERED — No. 13892 — STATE OF INDIANA — PROFESSIONAL ENGINEER

65

FEDERAL ROAD REGION NO.	STATE	PROJECT NO.	FISCAL YEAR	SHEET NO.	TOTAL SHEETS
5	IND.	M-T610(/)	1990	~~17~~ 8	~~130~~ 92

Cross Section Line No. 1

Sugar Creek Township / Harrison Township

Eqn. - 54.77
P.O.T. Sta 64+~~55.57~~ "PR-1"
= P.O.T. Sta. 6442.25 "A", 187.32' Lt.

N74°59'18"E

"PR-1" (Constr. ℄)

Cross Section Line No. 2

PROPOSED BRIDGE

℄ PROPOSED STRUCTURE
P.O.T. Sta 64+58.00 "P.R.-1"
Skew: 15° Rt.

P.O.T. Sta. 47+10.00 "T-3-A"
= P.O.T. Sta. 69+00.00 Line "A"
290.17' Lt. (Boat Spike)

℄ App. Rd.

+90, STR. NO. (See Next Sheet)

Constr. Limits

R/W

P.O.T. Sta. 68+42.20 Line "A"
275.00' Lt.

Eqn.
P.O.T. Sta. 69+28.35 "P.R.-1"
= P.O.T. Sta. 46+90.81 "T-3-A"
.03

AIDS ASSOCIATES III

(PARCEL 4A)
LEASE IN FAVOR OF AID
AMBULANCE AT VIGO COUNTY

P.O.T. Sta. 49+63.00 "T-3-A"

WABASH RIVER

℄ Cross Section Wabash River

Flow

P.O.T. Sta. 64+42.25 Line "A"
℄ Existing Bridge

Superstructure and Piers to be Removed to 1'-0" Below Bottom of Stream

Cross Section Line No. 3

EXISTING BRIDGE

Line "A" (Survey ℄)
N89°59'18"E

P.O.T. Sta. 69+00.00 Line "A"
P.O.T. Sta. 50+00.00 "T-3-A"
(P.K. Nail)

Proposed 12" D.I. Water Main (By Others)

Proposed 12" D.I. Water Main (By Others)

FOR INFORMATION ONLY

Sec. 21, T-12-N., R.-9-W.
Harrison Township
Vigo County

BENCH MARK
BM-USGS Gaging Station - Flood Control Bronze Disk In Wingwall
39' Rt. Sta. 68+51.00 Line "A" (S.E. Cor. Bridge On U.S.40
Over Wabash River) Elev. = 486.82

P.O.T. Sta. 69+00.00 Line "A"
= P.O.T. Sta. 50+00.00 "T-3-A"

DETAILS

Scale: 1" = 20'

HENRY C. RHEE
REGISTERED
No. 13692
STATE OF INDIANA
PROFESSIONAL ENGINEER

Rev. 1-4-91: Horiz. Align. Control Points

1976

B-18969

TP107

ALL R/W ON THIS SHEET TO BE AS SHOWN.
ALL R/W ON THIS SHEET DESCRIBED FROM LINE "PR-1" TO STA. 73+63.08, "PR-1" & FROM LINE "AL" STA. 73+28.42 "AL" AHEAD.

FEDERAL ROAD REGION NO.	STATE	PROJECT NO.	FISCAL YEAR	SHEET NO.	TOTAL SHEETS
5	IND.	M-T610( )	1990	~~18~~ 9	~~130~~ 92

70

"P.R.-1" CURVE DATA
P.I. Sta. 71+76.72 "P.R.-1"
Δ = 14°59'40.19" Rt.
D = 4°00'00"
R = 1432.39'
T = 188.51'
L = 374.86'
E = 12.35'
e = 0.030 ft.

EQUATION:
P.T. Sta. 73+63.08 "P.R.-1"
= P.O.T. Sta. 73+28.42 Line "AL"

RIVER — Flow

WABASH — Flow

P.O.T. Sta. 68+00.00 "AL"
P.O.T. Sta. 68+73.32 "AL"
= P.O.T. Sta. 38+75.00 Line "A"
374.15' Lt. (I.P.F.)

P.O.T. Sta. 46+06.00 "T-3-A"
P.O.T. Sta. 46+90.24 "T-3-A"
P.O.T. Sta. 47+10.00 "T-3-A"

Cross Section Line No. 1
Cross Section Line No. 2

Lot 5
Lot 4
TERRE HAUTE COMPANY ORIGINAL PLAT
DEMMING & WARREN SUB.
Lot 3
VIGO ICE & COLD STORAGE
Lot 2
(Conc. Slab)
P.I. Sta. 71+76.72 "P.R.-1"
= P.O.T. Sta. 71+39.91 Line "AL"
(Grass & Weeds)
P.O.T. Sta. 71+27.27 "AL"
Stone Monument, Down 2.0'
Lot 1 WILLIAM R. MONROE, ET AL.

CHERRY STREET (Vacated)
Line "AL" (Survey ℄)
N89°58'58"E
30' R/W
P.C. Sta. 69+88.21 "P.R.-1"
+88.21 30'
Constr. Limits +51.26
G.R.E.T. Type I Req'd.
100 Lft. of GR Class Hs Req'd.
+20.01
N74°59'18"E
END PROJECT
Sta. 69+50.00 Line "PR-1".
(10) 6" To 16" Cottonwood Trees
40' Transition
130' Transition
"PR-1" (Constr. ℄)
Constr. Limits
R/W
App. ℓ
App. ℓ R/W
+ R/W 30'
+ R/W (15.6°) 30'
R=30'
75° To Tang.
+55, STREET APPROACH Req'd. W=35'
WATER STREET (Vacated) (Asphalt)
Lot 247
Abandoned Fuel Pump Island
1 Story Block Bldg.
+80 STR. NO. 91
Adjust Casting To Grade
+95, STR. NO. 92
Adjust Casting To Grade
JOHN S. COX, INC.
Lot 248
+20, STR. NO. 94
Adjust Casting To Grade
+143, Alley Approach Req'd. W=14'
ALLEY (Gravel)
Conc. Vault Partially Filled w/ Trash
Conc. Ramp
R=10'
R=20' (Gravel)
Constr. Limits
1' Conc. Ret. Wall
Conc. Curb
Conc. Walk
Lot 249
Lot 250
Lot 251
Lot 232
Lot 231
RICHARD JENKINS
WILLIAM B. SMOCK
ALLEY (Vacated)
Temp R/W for Drive Constr.
30' R/W
+45, STR. NO. 96
Manhole, Type "B-4" & 154 Lft. of 15" Pipe Req'd.
+45, STR. NO. 95
Inlet, Type "J-10" & 7 Lft. of 12" Pipe Req'd.
+10, STR. NO. 96
Inlet, Type "J-10" & 11 Lft. of 12" Pipe Req'd.
+07, STR. NO. 98
Catch Basin, Type "W-4" & 62 Lft. of 15" Pipe Req'd.
+04, STR. NO. 97
Inlet, Type "J-10" & 11 Lft. of 12" Pipe Req'd.
+92, STR. NO. 93
Remove Existing Inlet & Seal Pipe In Place
+52, Class III Drive Req'd. W=24'
40' EASEMENT FOR INGRESS AND EGRESS, PARKING AND UTILITIES IN FAVOR OF OTHERS
+93, STR. NO. 90
Inlet, Type "B-4" & 90 Lft. of 12" Pipe (Conc.) Req'd.
+90, STR. NO. 89
Manhole, Type "B-4" & 90 Lft. of 15" Pipe Req'd.
+87, STR. NO. 88
Inlet, Type "J-10" & 11 Lft. of 12" Pipe Req'd.
Gas Pump & U.G. Tank Not to be disturbed during Construction
1 Story Block Bldg.
Temp R/W for Drive Construction
+33, STR. NO. 101
Manhole, Type "B-4" & 90 Lft. of 15" Pipe Req'd.
+33, STR. NO. 100
Inlet, Type "J-10" & 11 Lft. of 12" Pipe Req'd.
Conc. Parking
FOR INFORMATION ONLY
RICHARD JENKINS CONSTR., INC.
EASEMENT FOR PUBLIC UTILITIES IN VACATED WATER STREET IN FAVOR OF OTHERS
WATER STREET (Vacated)
+00, STR. NO. 87
Manhole, Type "B-4" & 22 Lft. of 15" Pipe Req'd.
+30, STR. NO. 83
Inlet, Type "R-13" & 13 Lft. of 12" Pipe Req'd.
+78, STR. NO. 84
Inlet, Type "R-13" & 13 Lft. of 12" Pipe Req'd.
+78, STR. NO. 85
Manhole, Type "B-4" & 48 Lft. of 15" Pipe Req'd.
+30, STR. NO. 82
Catch Basin, Type "C-4" & 56 Lft. of 15" Pipe Req'd.
+85, STR. NO. 82A
Drop Manhole, Type "C-4" & 76 Lft of 18" Pipe Req'd. w/ End Section
+00, STR. NO. 86
Inlet, Type "R-13" & 13 Lft. of 12" Pipe Req'd.
PROPOSED BRIDGE
6' Walk
Constr. Limits
Tie Bar @ 75°2.0'27"
AID ASSOCIATES III
(PARCEL 4A) LEASE IN FAVOR OF AID AMBULANCE AT VIGO COUNTY, INC.
TERRE HAUTE COMPANY ORIGINAL PLAT O.L. 24
"T-3-A"
P.O.T. Sta. 68+42.20 Line "A" 275.00' Lt.
(68.65') +105 ℄ Constr. Limits +75 90'
(Brush)
P.O.T. Sta. 69+00.00 Line "A" 29.0.17' Lt. (Seal Spike)
+88.21 30'
+90 "A" 187'
+12 "A" 187'
3°58'11"
Lot 251 P.T. STA. 1+77 (ALLEY ℄) = STA. 73+05.5, 176.84' LT. LINE "A"
Sec. 21, T-12-N., R.-9-W. Harrison Township Vigo County
BENCH MARK
BM #5- Boat Spike In N. Side Pwp. 24' Rt. Sta. 71+53. Line "AL" (Cherry St.) Elev. = 493.63

P.K. Nail Up 1.0' W. Side 6" Triple Elantha. (I.P.F.) Line "AL" 30.08' 30.30' P.K. Nail Up 1.0' In 10" Elantha Pipe. P.K. Nail Up 1.0' S.W. Side 16" Cottonwood
P.O.T. Sta. 68+75.00 "AL"
P.O.T. Sta. 68+75.00 "A" 374.15' Lt.

Stone Mon. Down 2.0' Line "AL" 55.37' 44.68' 36.31' 46.90' Car @ Back Of Walk P.K. Nail Up 1.0' SW Side Pwp.
P.K.N. W. Side 16" Mulberry. P.K.N. S. Side 24" Mulberry.
P.O.T. Sta. 71+27.27 "AL"

DETAILS

Scale: 1" = 20'

HENRY C. RHEE — REGISTERED NO. 13692 — STATE OF INDIANA — PROFESSIONAL ENGINEER

Rev. 1-4-91: Horiz. Align. Control Points

1976

B-18969

TP107

FEDERAL ROAD REGION NO	STATE	PROJECT NO	FISCAL YEAR	SHEET NO.	TOTAL SHEETS
5	IND.	M-T610(7)	1990	~~29~~ 10	~~130~~ 92

Cross Section Line No. 3

Conc. Sdwk. (Closed)

Conc. Curb

Tel. & T.V.

Line "A" (Survey ℄) N89°59'18"E

63 64 65 66 67 68 69

90°

EXISTING BRIDGE

Metal Bridge Rail

(Asphalt.)

18' ℄ Pier

18' ℄ Pier

12' ℄ Pier

12' ℄ Pier

28' Water & Gas

Conc. Curb

Conc. Sdwk. (Closed)

6" Water 6" Gas

+84 37' End Walk

+81 37'

Metal Bridge Rail

Conc. Sdwk. (Closed)

6" Water 8" Gas

Metal Bridge Rail

Conc. Sdwk. (Closed)

Metal Bridge Rail

Conc. Sdwk. (Closed)

Conc. Curb

Tel. & T.V.

18' ℄ Pier

Line "A" (Survey ℄) N89°59'18"E

App. ℄

(A-phalt)

90°00' Lt.

90°00' Rt.

P.O.T. Sta. 69+00.00 Line "A"
P.O.T. Sta. 50+00.00 "T-3-A" (F.K. Nail)

Conc. Handrail

BM

End Conc. Hand Rail

Mon 0585

Proposed 12" D.I. Water Main (By Others)

P.O.T. Sta. 64+42.28 Line "A" & Existing Bridge

Superstructure and Piers to be Removed to 1'-0" Below Bottom of Stream

Proposed 12" D.I. Water Main (By Others)

WABASH RIVER

℄ Cross Section

Wabash River

Flow

For Continuation See Sheet No. 7

Match Line

Cross Section Line No. 4

"PR-2" (Constr. ℄)

℄ PROPOSED STRUCTURE
P.O.T. Sta. 64+58.00 "PR.-2"
Skew: 15° Lt.

PROPOSED BRIDGE

S75°00'42"E

100'

1.5' 6' 12' 12' 6' 1.5'

"PR-2" (Constr. ℄)

Eqn. 54.77
P.O.T. Sta. 64+~~55.57~~ "PR.-2"
= P.O.T. Sta. 64+42.25 "A", 185.02' Rt.

Cross Section Line No. 5

Sugar Creek Township

Harrison Township

(Grass)

KIDDER'S SUB

Lot 1 Lot 2 Lot 3

MICHAEL H & JEROME KEARNS

Rip-Rap Retaining Wall

Top Wall 90'

Bottom Wall 92'

End Conc Ret. Wall

Old Light 57' Sta.

Asphalt (Pave.)

(Dirt)

P.O.T. Sta. 52+90.00 "T-3-A" (Boat Spike Set)

Eqn. 28.67
P.O.T. Sta. 69+~~29.77~~ "PR.-2"
= P.O.T. Sta. 53+07.~~50~~ "T-3-A"
.67

P.O.T. Sta. 68+42.20 Line "A" 275' Rt.

KIDDER'S SUB

Lot 6 Lot 7 Lot 8 Lot 9 Lot 10 Lot 11 Lot 12 Lot 13 Lot 14

R/W

(Grade Line 15')

Hub Set On T.B.

FOR INFORMATION ONLY

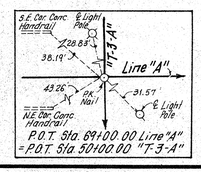

BENCH MARK
BM-USGS Gaging Station - Flood Control Bronze Disk In Wingwall 39' Rt. Sta. 68+51.00 Line "A" (S.E. Cor. Bridge On U.S. 40 Over Wabash River). Elev. = 486.82

Sec. 21, T-12-N., R.-9-W.
Harrison Township
Vigo County

DETAILS

Scale: 1" = 20'

HENRY C. RHEE REGISTERED No. 13692 STATE OF INDIANA PROFESSIONAL ENGINEER

Rev. 1-4-91 : Horiz. Align. Control Points

1976

B-18969

TP107

FEDERAL ROAD REGION NO	STATE	PROJECT NO	FISCAL YEAR	SHEET NO	TOTAL SHEETS
5	IND.	M-T610(7)	1990	~~21~~ 11	~~130~~ 92

DETAILS

Scale : 1" = 20'

FOR INFORMATION ONLY

ALL R/W ON THIS SHEET TO BE AS SHOWN.
ALL R/W ON THIS SHEET DESCRIBED FROM LINE "PR-2" TO STA. 73+94.87, "PR-2" & FROM LINE "AR", STA. 73+58.40, "AR" AHEAD.

Sec. 21, T-12-N., R-9-W.
Harrison Township
Vigo County

HENRY C. RHEE
REGISTERED
No. 13692
STATE OF INDIANA
PROFESSIONAL ENGINEER

Rev. 1-4-91 : Horiz. Align. Control Points

1976

B: 18969

TP107

FEDERAL ROAD REGION NO.	STATE	PROJECT NO.	FISCAL YEAR	SHEET NO.	TOTAL SHEETS
5	IND.	M-T610(1)	1990	~~16~~ 11A	~~130~~ 92

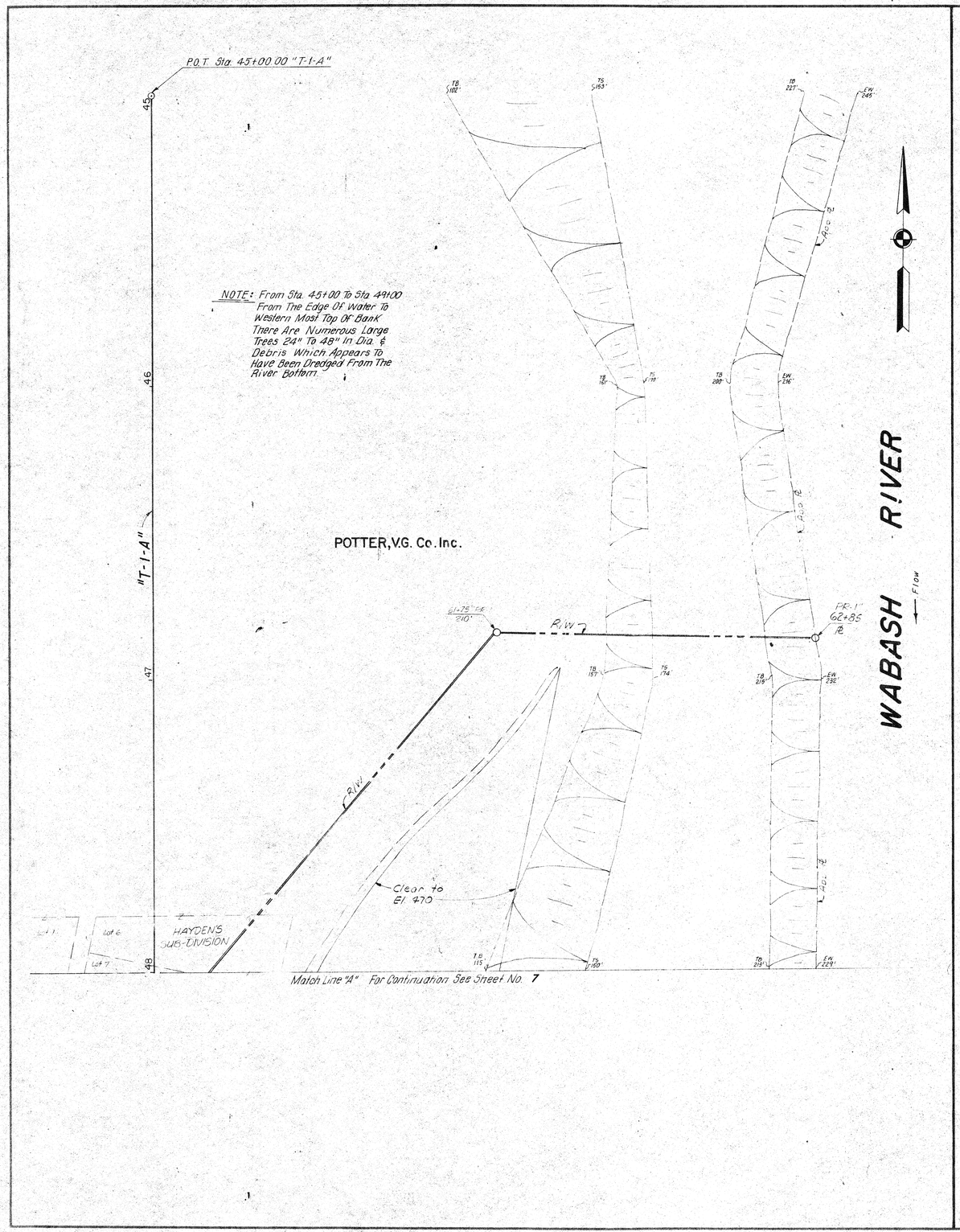

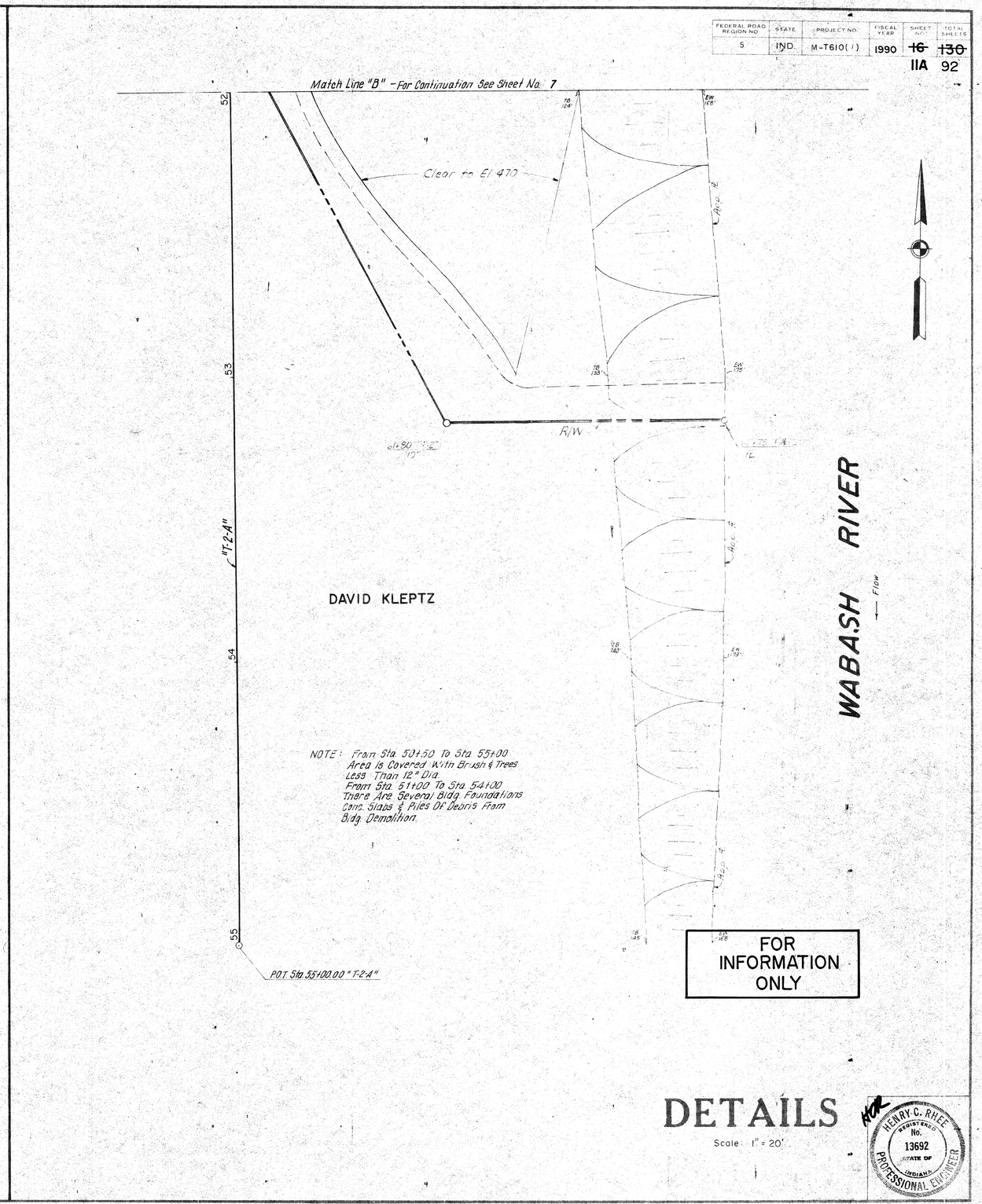

FOR INFORMATION ONLY

DETAILS

Scale: 1" = 20'

HENRY C. RHEE REGISTERED No. 13692 STATE OF INDIANA PROFESSIONAL ENGINEER

B-18969

WABASH RIVER

REF. POINT NO.1
Sta. 49+13.55 Line "A"

CITY OF TERRE HAUTE
DRESSER MEMORIAL PARK

V.G. POTTER CO., INC.

HEYDEN'S SUB-DIVISION

ST. MARY'S RD

U.S. 40 (Survey ℄) Line "A"

"PR-1" (Constr ℄)

"PR-2" (Constr ℄)

PROPOSED BRIDGE

Cross Section Line No. 1

Cross Section Line No. 2

Cross Section Line No. 3

Cross Section Line No. 4

Cross Section Line No. 5

TB-1 TB-2 TB-3 TB-4 TB-5 TB-6 TB-7 TB-8 TB-9 TB-10 TB-11 TB-12 TB-13 TB-14 TB-15 TB-16

Existing Bridge

Superstructure and Piers to be Removed to 1'-0" Below Bottom of Stream

VALENTINE & CO.

DEMMING & WARREN SUB-DIVISION

VIGO ICE & COLD STORAGE

AID ASSOCIATES III VIGO COUNTY AMBULANCE SERVICE

JOHN S. COX, INC.

RICHARD JENKINS CONSTR., INC.

KIDDER'S SUB-DIVISION MICHAEL H. & JEROME KEARNS

CITY OF TERRE HAUTE

CITY & COUNTY Parking Lot

Municipal Garage

VIGO COUNTY BOARD OF COMMISSIONER

FOREST D. PATRICIA K. THOMPSON

Jail

WATER ST. (Vacated)

FIRST ST.

CHERRY ST.

WABASH ST. (Vacated)

OHIO ST.

U.S. 40 - WESTBOUND

U.S. 40 - EASTBOUND

P.C. TRAC CO.

TEMP R/W

SUGAR CREEK TOWNSHIP

HARRISON TOWNSHIP

DRESSER DR.

(See Section Tie Below)

LOCATION PLAN

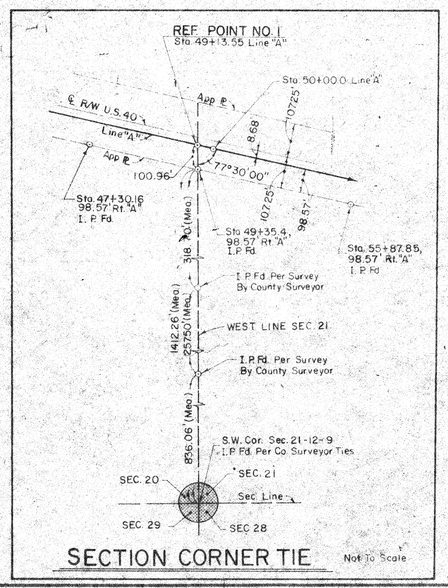

SECTION CORNER TIE

Not To Scale

INDEX NO.	OWNER
1	EDWARD & SUNYA COHEN
2	RICHARD JENKINS
3	WILLIAM G. SMOCK
4	AFM COMPANY
5	ALLEN & JUDITH HOLWEGER
6	A.C. & H. REALTY
7	VIGO COUNTY BOARD OF COMMISSIONERS
8	JOHN HANLEY JR. TRUSTEE

SOIL BORINGS

INDIANA DEPARTMENT OF TRANSPORTATION
VIGO COUNTY

Scale: 1" = 100'
SHEET 22 OF 92
PROJECT NO. M-T610(1)
CONTRACT NO. B-18969
BRIDGE FILE 40-84-7279

HENRY C. RHEE
REGISTERED No. 13692
STATE OF INDIANA
PROFESSIONAL ENGINEER

BORING NO. TB-1

Sheet 1 of 2 Structure No. 40-84-7279

PROJECT US40 over Wabash River
LOCATION in Vigo County, Indiana
CLIENT Gannett Fleming Transportation Engineers
ELEVATION 482.7 USC & GS STATION 60+17
OFFSET 15'Rt. *PR-1* WATER LEVEL-FIRST 27.0 COMPLETION * 24 HR. *
FINAL BORING DEPTH 65.0'

PROJECT NO. M-T610(1) DATE STARTED 6-8-87
BORING METHOD HSA & WB DATE COMPLETED 6-8-87
RIG TYPE Truck CASING DIA. N/A CORE SIZE N/A
NO.SAMPLES 15 DISTURBED 15 UNDIST 0 CORE 0

Depth (ft)	Soils/Material Description	Stratum Depth (ft)	Standard Penetration Resistance Blows Per 6 In. (N)	Sample No.	Recovery (%)	Qu (tsf)	Qp (tsf)	Moisture (%)	Dry Density (pcf)	Atterberg Limits LL	PL	PI	Shelby Tube No.	Bag Sample No.
	Sand, medium dense to very loose, slightly moist, black, with brick and concrete fragments, cinders to 2.5', brick fragments & cinders after 2.5' (fill) (visual)		3 11,9	SS-1	90									
			3 2,1	SS-2	65									
			2 1,1	SS-3	35									
			4 4,5	SS-4	45			8.9						
			2 1,1	SS-5	10									
			3 4,4	SS-6	15									
	458.2	24.5	5 5,4	SS-7	45									
	Sandy Loam, loose, very moist to wet, brown with occasional silty loam seams, A-4(0), Lab No. 4111SL		3 4,3	SS-8	100			22.3						
			5 6,2	SS-9	100									
	442.7	40.0	3 3,5	SS-10	100			25.7		N/P	N/P	N/P		
	Sand, medium dense to dense, moist, grey to brown, occasional gravel seams after 48.5', A-1-b, Lab No. 4115SL		8 9,11	SS-11	70									

Remarks Wash boring from 28.5' to 63.5'. *Test hole caved in to 15.0', dry above 15.0'.

Driller: O. Cornelius Inspector: C. McGee Weather: Sunny Temp: 72°F

BORING NO. TB-2

Sheet 1 of 1 Structure No. 40-84-7279

PROJECT US40 over Wabash River
LOCATION in Vigo County, Indiana
CLIENT Gannett Fleming Transportation Engineers
ELEVATION 463.0 USC & GS STATION 61+26
OFFSET 15' Lt. *PR-1* WATER LEVEL-FIRST 9.0' COMPLETION 8.0'* 24 HR. **
FINAL BORING DEPTH 40.0'

PROJECT NO. M-T610(1) DATE STARTED 6-5-87
BORING METHOD HSA DATE COMPLETED 6-5-87
RIG TYPE Skid CASING DIA. N/A CORE SIZE N/A
NO.SAMPLES 10 DISTURBED 10 UNDIST 0 CORE 0

Depth (ft)	Soils/Material Description	Stratum Depth (ft)	Standard Penetration Resistance Blows Per 6 In. (N)	Sample No.	Recovery (%)	Qu (tsf)	Qp (tsf)	Moisture (%)	Dry Density (pcf)	Atterberg Limits LL	PL	PI	Shelby Tube No.	Bag Sample No.
	Silty Loam, loose, moist, dark brown with stone fragments (fill) (visual)	2.0	5 5,5	SS-1	90			15.3						
	Sandy Loam, loose, to very loose, moist, black, with asphalt fragments (fill) (visual)		2 2,2	SS-2	100									
	454.0	9.0	2 2,1	SS-3	90			36.1						
	Silty Loam, soft, very moist, brown with brick fragments (fill) (visual)		1 1,2	SS-4	60			29.5						
	449.0	14.0	2 1,1	SS-5	85									
	Sand, very loose to medium dense, wet, brown, A-1-b, Lab No. 4115SL		7 7,9	SS-6	100									
	439.0	24.0	4 6,9	SS-7	65									
	Gravelly Sand, medium dense to very dense, moist, brown, A-1-b, Lab No. 4113SL		9 10,9	SS-8	70									
			14 5,24	SS-9	90									
	423.0		18 26,34	SS-10	95									
	B.T.H. 40.0'													

Remarks *Wash boring from 23.5 to 38.5'. ** Test hole caved into 9.0', dry above 9.0'.

Driller: M. Denney Inspector: C. McGee Weather: Sunny Temp: 75°F

BORING NO. TB-3

Sheet 1 of 1 Structure No. 40-84-7279

PROJECT US40 over Wabash River
LOCATION in Vigo County, Indiana
CLIENT Gannett Fleming Transportation Engineers
ELEVATION 443.6 USC & GS STATION 62+50
OFFSET 15'Rt. *PR-1* WATER LEVEL-FIRST * COMPLETION * 24 HR. *
FINAL BORING DEPTH 35.0'

PROJECT NO. M-T610(1) DATE STARTED 6-10-87
BORING METHOD HSA DATE COMPLETED 6-10-87
RIG TYPE Skid CASING DIA. N/A CORE SIZE N/A
NO.SAMPLES 9 DISTURBED 9 UNDIST 0 CORE 0

Depth (ft)	Soils/Material Description	Stratum Depth (ft)	Standard Penetration Resistance Blows Per 6 In. (N)	Sample No.	Recovery (%)	Qu (tsf)	Qp (tsf)	Moisture (%)	Dry Density (pcf)	Atterberg Limits LL	PL	PI	Shelby Tube No.	Bag Sample No.
	Silty Clay Loam, very soft, very moist, grey, with occasional sand seams after 4.0' (visual)		1 1,1	SS-1	100			35.4						
			0 0,2	SS-2	100									
	437.6	6.0												
	Sandy Loam, med. dense to loose, wet, gray to brown, with shell fragments, A-4, Lab No. 4111SL		5 3,8	SS-3	100									
			3 6,4	SS-4	100			20.6						
	432.6	11.0												
			4 5,10	SS-5	45									
	Sand and Gravel, medium dense to dense, wet to moist, brown, with occasional gravel seams, occasional cobbles after 24.0', A-1-a, Lab No. 4116SL		7 9,30	SS-7	100									
			10 19,24	SS-8	100									
	408.6		16 18,30	SS-9	100									
	B.T.H. 35.0'													

Remarks * Test hole drilled from floating platform in 6.8' of water.

Driller: M. Denney Inspector: C. McGee Weather: Sunny Temp: 75°F

BORING NO. TB-4

Sheet 1 of 2 Structure No. 40-84-7279

PROJECT US40 over Wabash River
LOCATION in Vigo County, Indiana
CLIENT Gannett Fleming Transportation Engineers
ELEVATION 442.2 USC & GS STATION 63+88
OFFSET 15'Lt. *PR-1* WATER LEVEL-FIRST * COMPLETION * 24 HR. *
FINAL BORING DEPTH 55.0'

PROJECT NO. M-T610(1) DATE STARTED 6-11-87
BORING METHOD HSA & WB DATE COMPLETED 6-11-87
RIG TYPE Skid CASING DIA. N/A CORE SIZE N/A
NO.SAMPLES 13 DISTURBED 13 UNDIST 0 CORE 0

Depth (ft)	Soils/Material Description	Stratum Depth (ft)	Standard Penetration Resistance Blows Per 6 In. (N)	Sample No.	Recovery (%)	Qu (tsf)	Qp (tsf)	Moisture (%)	Dry Density (pcf)	Atterberg Limits LL	PL	PI	Shelby Tube No.	Bag Sample No.
	Sand, very loose, wet, grey with shell fragments, A-1-b, Lab No. 4115SL		2 1,1	SS-1	100									
	438.2	4.0	4 2,2	SS-2	100									
	Gravelly Sand, very loose, moist, grey with occasional very moist silty clay loam seams, A-1-b, Lab No. 4113SL		6 2,2	SS-3	100									
	433.7	8.5	3 2,5	SS-4	100									
	Sand and Gravel, loose to dense, wet, brown to grey, with occasional small boulders, A-1-a, Lab No. 4116SL		13 10,18	SS-5	100									
			13 13,18	SS-6	30									
	418.7	23.5	15 40,18	SS-7	40									
	Sandy Gravel, very dense to med. dense, wet, brown, with occasional gravel seams & occasional small boulders, A-1-a, Lab No. 4112SL		7 5,8	SS-8	40									
	407.2	34.0	20 17,14	SS-9	40									
	Sand & Gravel, dense, wet, brown, with occasional gravel seams, A-1-a, Lab No. 4116SL		14 14,29	SS-10	40									
			14 18,30	SS-11	100									

Remarks *Test hole drilled from floating platform in 7.8' of water. Wash boring from 18.5' to 55.0'

Driller: M. Denney Inspector: C. McGee Weather: Cloudy Temp: 80°F

BORING NO. TB-1

Sheet 2 of 2

Depth (ft)	Soils/Material Description	Stratum Depth (ft)	Standard Penetration Resistance Blows Per 6 In. (N)	Sample No.	Recovery (%)	Qu (tsf)	Qp (tsf)	Moisture (%)	Dry Density (pcf)	Atterberg Limits LL	PL	PI	Shelby Tube No.	Bag Sample No.
	Sand, medium dense to dense, moist, brown, occasional gravel seams after 48.5', A-1-b, Lab No. 4115SL		14 16,21	SS-12	80									
	429.2	53.5	17 12,19	SS-13	65									
	Sand and Gravel, dense to very dense, moist, brown, A-1-a, Lab No. 4116SL		20 27,26	SS-14	65									
	417.7		16 18,20	SS-15	65									
	B.T.H. 65.0'													

Remarks

BORING NO. TB-5

Sheet 1 of 1 Structure No. 40-84-7279

PROJECT US40 over Wabash River
LOCATION in Vigo County, Indiana
CLIENT Gannett Fleming Transportation Engineers
ELEVATION 441.0 USC & GS STATION 65+30
OFFSET 15'Rt. *PR-1* WATER LEVEL-FIRST * COMPLETION * 24 HR. *
FINAL BORING DEPTH 40.0'

PROJECT NO. M-T610(1) DATE STARTED 6-12-87
BORING METHOD HSA & WB DATE COMPLETED 6-12-87
RIG TYPE Skid CASING DIA. N/A CORE SIZE N/A
NO.SAMPLES 10 DISTURBED 10 UNDIST 0 CORE 0

Depth (ft)	Soils/Material Description	Stratum Depth (ft)	Standard Penetration Resistance Blows Per 6 In. (N)	Sample No.	Recovery (%)	Qu (tsf)	Qp (tsf)	Moisture (%)	Dry Density (pcf)	Atterberg Limits LL	PL	PI	Shelby Tube No.	Bag Sample No.
	Sand & Gravel, very loose, wet, brown, A-1-a, Lab No. 4116SL		2 2,3	SS-1	60									
	438.0	3.0												
	Silty Clay, soft, very moist, grey, A-7-6, Lab No. 4114SL		1 2,3	SS-2	100			32.4						
	434.5	6.5	5 2,4	SS-3	100									
	Sand & Gravel, loose to medium dense, wet, brown, with occasional small boulders, A-1-a, Lab No. 4116SL		8 6,9	SS-4	100									
			12 8,9	SS-5	100									
	424.0	17.0												
	Sandy Gravel, dense to very dense, wet, brown, with occasional small boulders, A-1-a,(0), Lab No. 4122SL		14 16,21	SS-6	65			N/A		N/P	N/P	N/P		
	416.0	25.0	30 28,21	SS-7	60									
	Gravelly Sand, dense to medium dense, wet, brown, with occasional small boulders, A-1-b, Lab No. 4113SL		10 13,20	SS-8	100									
			11 14,11	SS-9	45									
	401.0		15 14,18	SS-10	45									
	B.T.H. 40.0'													

Remarks * Test hole drilled from floating platform in 7.0' of water. Wash boring from 18.5' to 38.5'.

Driller: M. Denney Inspector: C. McGee Weather: Rain Temp: 80°F

BORING NO. TB-6

Sheet 1 of 1 Structure No. 40-84-7279

PROJECT US40 over Wabash River
LOCATION in Vigo County, Indiana
CLIENT Gannett Fleming Transportation Engineers
ELEVATION 441.9 USC & GS STATION 66+67
OFFSET 15'Lt. *PR-1* WATER LEVEL-FIRST * COMPLETION * 24 HR. *
FINAL BORING DEPTH 35.0'

PROJECT NO. M-T610(1) DATE STARTED 6-15-87
BORING METHOD HSA & WB DATE COMPLETED 6-15-87
RIG TYPE Skid CASING DIA. N/A CORE SIZE N/A
NO.SAMPLES 9 DISTURBED 9 UNDIST 0 CORE 0

Depth (ft)	Soils/Material Description	Stratum Depth (ft)	Standard Penetration Resistance Blows Per 6 In. (N)	Sample No.	Recovery (%)	Qu (tsf)	Qp (tsf)	Moisture (%)	Dry Density (pcf)	Atterberg Limits LL	PL	PI	Shelby Tube No.	Bag Sample No.
	Sand & Gravel, very loose to medium dense, wet, brown, A-1-a, Lab No. 4116SL		2 1,1	SS-1	20									
			4 3,4	SS-2	65									
	434.9	7.0	6 7,8	SS-3	80									
	Sandy Gravel, medium dense to very loose, wet, brown, A-1-a, Lab No. 4112SL		3 1,1	SS-4	15									
	428.9	13.0												
	Gravelly Sand, dense, wet, brown, with occasional small boulders, A-1-b(0), Lab No. 4113SL		11 19,26	SS-5	90			N/A		N/P	N/P	N/P		
			13 12,20	SS-6	65									
	415.9	26.0	13 20,20	SS-7	40									
	Sand, dense, wet, brown, with occasional gravel seam and occasional small boulders, A-1-b, Lab No. 4115SL		7 13,20	SS-8	95									
	406.9		10 14,29	SS-9	80									
	B.T.H 35.0'													

Remarks * Test hole drilled from floating platform in 7.6' of water; wash boring from 8.5' to 33.5'.

Driller: M. Denney Inspector: C. McGee Weather: Sunny Temp: 85°F

BORING NO. TB-4

Sheet 2 of 2

Depth (ft)	Soils/Material Description	Stratum Depth (ft)	Standard Penetration Resistance Blows Per 6 In. (N)	Sample No.	Recovery (%)	Qu (tsf)	Qp (tsf)	Moisture (%)	Dry Density (pcf)	Atterberg Limits LL	PL	PI	Shelby Tube No.	Bag Sample No.
	Sand & Gravel, dense, wet, brown, with occasional gravel seams, A-1-a, Lab No. 4116SL		14 14,21	SS-12	100									
	387.2		11 11,30	SS-13	65									
	B.T.H. 55.0'													

Remarks

DESIGNED JEE C'K'D J.G.
DRAWN JEE C'K'D J.G.
TRACED C'K'D

SF-22317

SOIL BORINGS

INDIANA DEPARTMENT OF ~~HIGHWAYS~~ TRANSPORTATION
VIGO COUNTY

SCALE:- No Scale DATE:- 19

SHEET:- 23 OF 92

PROJECT:- ~~ST-T610(1)~~ M-T610(1)
BRIDGE CONTRACT NO. B-18969
BRIDGE FILE:- 40-84-7279

HENRY C. RHEE REGISTERED No. 13692 STATE OF INDIANA PROFESSIONAL ENGINEER

TP101

BORING NO. TB-7

Sheet 1 of 1 — Structure No. 40-84-7279

PROJECT US40 over Wabash River — PROJECT NO. M-T610(1) — DATE STARTED 6-16-87
LOCATION in Vigo County, Indiana — BORING METHOD HSA & WB — DATE COMPLETED 6-16-87
CLIENT Gannett Fleming Transportation Engineers — RIG TYPE Skid — CASING DIA. N/A CORE SIZE N/A
ELEVATION 444.1 USC & GS — STATION 67+90 — NO.SAMPLES 9 — DISTURBED 9 UNDIST 0 CORE 0
FINAL BORING DEPTH 35.0' — OFFSET 15'Rt. *PR-1* — WATER LEVEL-FIRST * — COMPLETION * — 24 HR. *

Depth (ft)	Soils/Material Description	Stratum Depth (ft)	Standard Penetration Blows Per 6 in. (N)	Sample No.	Recovery (%)	Qu (tsf)	Qp (tsf)	Moisture (%)	Dry Density (pcf)	Atterberg Limits LL	PL	PI	Shelby Tube No.	Bag Sample No.
			1 0,0	SS-1	55									
	Silty Clay Loam, very soft, very moist, grey (sediment) (visual)		1 1,1	SS-2	90			49.6						
	437.1	7.0	1 1,1	SS-3	90									
	Sandy Gravel, very loose to dense, wet, brown with occasional silty clay loam seams to 10.0', A-1-a, Lab No. 41135SL		2 2,4	SS-4	80									
	429.1	15.0	14 19,27	SS-5	70									
	Sand & Gravel, medium dense to dense, wet, brown, with occasional small boulders, A-1-a, Lab No. 41165L		9 12,16	SS-6	85									
	419.1	25.0	11 13,18	SS-7	85									
	Sand, dense, wet, brown, A-1-b, Lab No. 41115SL		11 18,29	SS-8	100									
	409.1		7 12,24	SS-9	85									
	B.T.H. 35.0'													

Remarks * Test hole drilled from floating platform in 4.2' of water; wash boring from 18.5' to 35.0'.

Driller: M. Denney Inspector: C. McGee Weather: Sunny Temp: 85°F

BORING NO. TB-8

Sheet 1 of 2 — Structure No. 40-84-7279

PROJECT US40 over Wabash River — PROJECT NO. M-T610(1) — DATE STARTED 6-12-87
LOCATION in Vigo County, Indiana — BORING METHOD HSA & WB — DATE COMPLETED 6-12-87
CLIENT Gannett Fleming Transportation Engineers — RIG TYPE Skid — CASING DIA. N/A CORE SIZE N/A
ELEVATION 459.5 USC & GS — STATION 69+03 — NO.SAMPLES 15 — DISTURBED 15 UNDIST 0 CORE 0
FINAL BORING DEPTH 65.0' — OFFSET 15'Lt*PR-1* — WATER LEVEL-FIRST 24.0 — COMPLETION * — 24 HR. *

Depth (ft)	Soils/Material Description	Stratum Depth (ft)	Standard Penetration Blows Per 6 in. (N)	Sample No.	Recovery (%)	Qu (tsf)	Qp (tsf)	Moisture (%)	Dry Density (pcf)	Atterberg Limits LL	PL	PI	Shelby Tube No.	Bag Sample No.
			4 5,6	SS-1	65									
			6 4,7	SS-2	65									
			15 8,6	SS-3	70			6.1						
	Sandy Loam, loose to med. dense, slightly moist, black, with concrete & brick fragments, stone, cinders, metal and trash (fill) (visual)		10 5,6	SS-4	65									
			17 13,9	SS-5	80									
	462.0	23.5	20 16,9	SS-6	20									
			13 10,10	SS-7	80									
	Sand, medium dense, moist to wet, brown, A-1-b, Lab No. 41115SL		6 7,8	SS-8	90									
	452.0	33.5	5 5,5	SS-9	100			30.3						
	Silty Clay, medium stiff, very moist, grey, with occasional sandy loam seams. A-7-6, Lab No. 41145L		5 5,5	SS-10	100									
	441.5	44.0	9 11,14	SS-11	80									
	SEE Page 2													

Remarks Wash boring from 24.0' to 65.5'. * Test hole caved in to 22.5', dry above 22.5'.

Driller: M. Denney Inspector: C. McGee Weather: Rain Temp: 80°F

BORING NO. TB-9

Sheet 1 of 2 — Structure No. 40-84-7279

PROJECT US40 over Wabash River — PROJECT NO. M-T610(1) — DATE STARTED 6-10-87
LOCATION in Vigo County, Indiana — BORING METHOD HSA & WB — DATE COMPLETED 6-10-87
CLIENT Gannett Fleming Transportation Engineers — RIG TYPE Truck — CASING DIA. N/A CORE SIZE N/A
ELEVATION 475.0 USC & GS — STATION 60+22 — NO.SAMPLES 13 — DISTURBED 13 UNDIST 0 CORE 0
FINAL BORING DEPTH 55.0' — OFFSET 15'Rt. *PR-2* — WATER LEVEL-FIRST 22.0' — COMPLETION 9.0'* — 24 HR. **

Depth (ft)	Soils/Material Description	Stratum Depth (ft)	Standard Penetration Blows Per 6 in. (N)	Sample No.	Recovery (%)	Qu (tsf)	Qp (tsf)	Moisture (%)	Dry Density (pcf)	Atterberg Limits LL	PL	PI	Shelby Tube No.	Bag Sample No.
			3 3,2	SS-1	80									
			2 2,2	SS-2	65			21.4						
	Sandy Loam, very loose to loose, slightly moist, black with brick & concrete fragments, cinders, trash (fill) (visual)		2 2,3	SS-3	65									
			3 3,5	SS-4	90									
	461.5	13.5	1 2,2	SS-5	90									
	Sandy Loam, very loose to loose, wet, brown, A-4, Lab No. 41115L		5 5,4	SS-6	100			20.4						
	451.5	23.5	1 1,3	SS-7	100									
	Sand, very loose to medium dense, wet, grey, with occasional silty loam seams, A-1-b, Lab No. 41155L		2 2,3	SS-8	100									
	440.0	35.0	4 10,12	SS-9	90									
	Sand & Gravel, medium dense to dense, wet, brown, A-1-a, Lab No. 41165L		12 12,14	SS-10	65									
			17 17,10	SS-11	65									

Remarks * Water and drilling mud introduced into test hole from 23.5' to 55.0'.
** Test hole caved into 18.2'; dry above 18.2'.

Driller: O. Cornelius Inspector: C. McGee Weather: Sunny Temp: 75°F

BORING NO. TB-10

Sheet 1 of 1 — Structure No. 40-84-7279 J

PROJECT US40 over Wabash River — PROJECT NO. M-T610(1) — DATE STARTED 6-23-87
LOCATION in Vigo County, Indiana — BORING METHOD HSA & WB — DATE COMPLETED 6-23-87
CLIENT Gannett Fleming Transportation Engineers — RIG TYPE Skid — CASING DIA. N/A CORE SIZE N/A
ELEVATION 461.7 USC &GS — STATION 61+22 — NO.SAMPLES 11 — DISTURBED 11 UNDIST 0 CORE 0
FINAL BORING DEPTH 45.0' — OFFSET 18'Lt. *PR-2* — WATER LEVEL-FIRST 14.0 — COMPLETION 15.0'* — 24 HR. 13'

Depth (ft)	Soils/Material Description	Stratum Depth (ft)	Standard Penetration Blows Per 6 in. (N)	Sample No.	Recovery (%)	Qu (tsf)	Qp (tsf)	Moisture (%)	Dry Density (pcf)	Atterberg Limits LL	PL	PI	Shelby Tube No.	Bag Sample No.
	Silty Clay Loam, medium stiff, slightly moist, dark brown, with trace root hairs and glass (fill) (visual)		4 4,5	SS-1	60			22.8						
	457.7	4.0	3 3,5	SS-2	95			18.2						
	Silty Loam, loose, moist, dark brown (possible fill) (visual)		2 3,3	SS-3	100									8.5
	454.2	7.5	1 1,1	SS-4	100			33.1		42	24	18		BS-1 13.0
	Silty Clay, very soft, very moist to wet, brown to grey with occasional sandy loam seams, A-7-6 (18) Lab No. 41145L													
	447.7	14.0	1 1,2	SS-5	100									
	Silty Loam, very loose, wet, grey, with trace wood fragments, A-4, Lab No. 41175L		1 2,2	SS-6	100			30.7						
	440.7	21.0	9 10,12	SS-7	45									
	Gravelly Sand, medium dense to very dense, wet, brown, with occasional sand seams after 30.0', A-1-b, Lab No. 41135L		12 12,16	SS-8	55									
			16 22,26	SS-9	55									
			11 13,21	SS-10	65									
	416.7		21 35,42	SS-11	95									
	B.T.H. 45.0'													

Remarks * Wash boring from 23.5' to 45.0'.

Driller: M. Denney Inspector: C. McGee Weather: Sunny Temp: 80°F

BORING NO. TB-11

Sheet 1 of 1 — Structure No. 40-84-7279 J

PROJECT US40 over Wabash River — PROJECT NO. M-T610(1) — DATE STARTED 6-23-87
LOCATION in Vigo County, Indiana — BORING METHOD HSA & WB — DATE COMPLETED 6-23-87
CLIENT Gannett Fleming Transportation Engineers — RIG TYPE Skid — CASING DIA. N/A CORE SIZE N/A
ELEVATION 443.3 USC & GS — STATION 62+58 — NO.SAMPLES 8 — DISTURBED 8 UNDIST 0 CORE 0
FINAL BORING DEPTH 30.0' — OFFSET 15'Rt. *PR-2* — WATER LEVEL-FIRST * — COMPLETION * — 24 HR. *

Depth (ft)	Soils/Material Description	Stratum Depth (ft)	Standard Penetration Blows Per 6 in. (N)	Sample No.	Recovery (%)	Qu (tsf)	Qp (tsf)	Moisture (%)	Dry Density (pcf)	Atterberg Limits LL	PL	PI	Shelby Tube No.	Bag Sample No.
			2 1,2	SS-1	80									
			3 3,6	SS-2	70									
			7 9,14	SS-3	50									
	Sand, very loose to dense, wet to moist, brown, with large piece of wood from 8.0' to 9.0', A-1-b(0), Lab No. 41155L		** 50/.3	SS-4	15									
			9 9,16	SS-5	85									
			13 20,21	SS-6	100			N/A		N/P	N/P	N/P		
	419.3	24.0	33 45,47	SS-7	100									
	Sand & Gravel, very dense, moist, brown, with occasional coarse gravel & small boulders, A-1-a, Lab No. 41165L													
	413.3		30 47,36	SS-8	100									
	B.T.H. 30.0'													

Remarks * Test hole drilled from floating platform in 6.3' of water; wash boring from 23.5' to 30.0'.
**Driving on wood

Driller: M. Denney Inspector: C. McGee Weather: Sunny Temp: 80°F

BORING NO. TB-8

Sheet 2 of 2

Depth (ft)	Soils/Material Description	Stratum Depth (ft)	Standard Penetration Blows Per 6 in. (N)	Sample No.	Recovery (%)	Qu (tsf)	Qp (tsf)	Moisture (%)	Dry Density (pcf)	Atterberg Limits LL	PL	PI	Shelby Tube No.	Bag Sample No.
			17 18,22	SS-12	10									
	Sand & Gravel, medium dense to dense, wet, brown & grey, with occasional silt seams to 48.5', with occasional coarse gravel seams and small boulders after 48.5', A-1-a, Lab No. 41165L		15 16,17	SS-13	80									
			14 16,18	SS-14	45									
	420.5		13 19,23	SS-15	45									
	B.T.H. 65.0'													

Remarks

BORING NO. TB-9

Sheet 2 of 2

Depth (ft)	Soils/Material Description	Stratum Depth (ft)	Standard Penetration Blows Per 6 in. (N)	Sample No.	Recovery (%)	Qu (tsf)	Qp (tsf)	Moisture (%)	Dry Density (pcf)	Atterberg Limits LL	PL	PI	Shelby Tube No.	Bag Sample No.
	Sand & Gravel, medium dense to dense, wet, brown, A-1-a, Lab No. 41165L		17 14,19	SS-12	100									
	420.0		16 18,22	SS-13	65									
	B.T.H. 55.0'													

Remarks

DESIGNED JEE C'K'D JG
DRAWN JEE C'K'D JG
TRACED C'K'D

SF-22317

SOIL BORINGS

INDIANA DEPARTMENT OF ~~HIGHWAYS~~ TRANSPORTATION
VIGO COUNTY

SCALE:- No Scale DATE:-

SHEET:- 24 OF 92

PROJECT:- ~~ST-T610(1)~~ M-T610(1)
BRIDGE CONTRACT NO. B-18969
BRIDGE FILE:- 40-84-7279

HENRY C. RHEE — REGISTERED No. 13692 — STATE OF INDIANA — PROFESSIONAL ENGINEER

BORING NO. TB-12

test boring record

Sheet 1 of 1 Structure No. 40-84-7279 J

PROJECT US40 over Wabash River
LOCATION in Vigo County, Indiana
CLIENT Gannett Fleming Transportation Engineers
ELEVATION 444.5 USC & GS STATION 63+80
FINAL BORING DEPTH 35.0' OFFSET 15'Lt. *PR-2* WATER LEVEL-FIRST * COMPLETION * 24 HR. *

PROJECT NO. M-T610(1) DATE STARTED 6-22-87
BORING METHOD HSA & WB DATE COMPLETED 6-22-87
RIG TYPE Skid CASING DIA. N/A CORE SIZE N/A
NO.SAMPLES 9 DISTURBED 9 UNDIST 0 CORE 0

Depth (ft)	Soils/Material Description	Stratum Depth (ft)	Standard Penetration Blows Per 6 in. (N)	Sample No.	Recovery (%)	Qu (tsf)	Qp (tsf)	Moisture (%)	Dry Density (pcf)	Atterberg Limits LL	PL	PI	Shelby Tube No.	Bag Sample No.
			2 1,1	SS-1	95									
			3 2,2	SS-2	65									
	Sand, very loose to medium dense, wet, brown, A-1-b, Lab No. 4115SL		5 2,3	SS-3	50									
			4 3,4	SS-4	80									
		431.5												
		13.0	13 10,21	SS-5	85									
			8 13,16	SS-6	70									
	Sand & Gravel, medium dense to very dense, wet, brown, with occasional gravel seams after 23.0', and occasional small boulders, A-1-a, Lab No. 4116SL		22 22,32	SS-7	10									
			13 24,27	SS-8	65									
		409.5												
	B.T.H. 35.0'		27 25,34	SS-9	100									

Remarks * Test hole drilled from floating platform in 5.5' of water; wash boring from 13.5' to 35.0'.

Driller: M. Denney Inspector: C. McGee Weather: M,Sunny Temp: 80°F

BORING NO. TB-14

test boring record

Sheet 1 of 2 Structure No. 40-84-7279 J

PROJECT US40 over Wabash River
LOCATION in Vigo County, Indiana
CLIENT Gannett Fleming Transportation Engineers
ELEVATION 439.1 USC & GS STATION 66+58
FINAL BORING DEPTH 50.0' OFFSET 15'Lt. *PR-2* WATER LEVEL-FIRST * COMPLETION * 24 HR. *

PROJECT NO. M-T610(1) DATE STARTED 6-18-87
BORING METHOD HSA & WB DATE COMPLETED 6-18-87
RIG TYPE Skid CASING DIA. N/A CORE SIZE N/A
NO.SAMPLES 12 DISTURBED 12 UNDIST 0 CORE 0

Depth (ft)	Soils/Material Description	Stratum Depth (ft)	Standard Penetration Blows Per 6 in. (N)	Sample No.	Recovery (%)	Qu (tsf)	Qp (tsf)	Moisture (%)	Dry Density (pcf)	Atterberg Limits LL	PL	PI	Shelby Tube No.	Bag Sample No.
	Gravelly Sand, very loose, wet, brown, A-1-b, Lab No. 4113SL		3 3,2	SS-1	45									
		433.6												
		5.5	5 2,3	SS-2	60									
			3 2,2	SS-3	30									
			4 2,2	SS-4	20									
	Sand & Gravel, very loose to very dense, wet, brown, A-1-a, Lab No. 4116SL		14 21,33	SS-5	70									
		417.1												
		22.0	24 29,23	SS-6	85									
			11 12,21	SS-7	65									
	Sand, dense to very dense, wet, brown, A-1-b, Lab No. 4115SL		13 27,39	SS-8	100									
			24 27,40	SS-9	100									
			9 14,27	SS-10	60									
			15 18,40	SS-11	100									

Remarks * Test hole drilled from floating platform in 8.2' of water; wash boring from 6.5' to 50.0'.

Driller: M. Denney Inspector: C. McGee Weather: Sunny Temp: 85°F

BORING NO. TB-15

test boring record

Sheet 1 of 1 Structure No. 40-84-7279 J

PROJECT US40 over Wabash River
LOCATION in Vigo County, Indiana
CLIENT Gannett Fleming Transportation Engineers
ELEVATION 440.7 USC & GS STATION 62+96
FINAL BORING DEPTH 35.0' OFFSET 15'Rt. *PR-2* WATER LEVEL-FIRST * COMPLETION * 24 HR. *

PROJECT NO. M-T610(1) DATE STARTED 6-17-87
BORING METHOD HSA & WB DATE COMPLETED 6-17-87
RIG TYPE Skid CASING DIA. N/A CORE SIZE N/A
NO.SAMPLES 9 DISTURBED 9 UNDIST 0 CORE 0

Depth (ft)	Soils/Material Description	Stratum Depth (ft)	Standard Penetration Blows Per 6 in. (N)	Sample No.	Recovery (%)	Qu (tsf)	Qp (tsf)	Moisture (%)	Dry Density (pcf)	Atterberg Limits LL	PL	PI	Shelby Tube No.	Bag Sample No.
	Sand, very loose, wet, brown, A-1-b, Lab No. 4115SL		1 1,2	SS-1	70									
		436.7												
		4.0	2 5,6	SS-2	60									
			5 8,7	SS-3	65									
			10 3,4	SS-4	65									
	Sand & Gravel, loose to med. dense, wet, brown, A-1-a(0), Lab No. 4116SL		10 7,12	SS-5	100									
			8 11,15	SS-6	80			N/A		N/P	N/P	N/P		
			9 11,18	SS-7	10									
		413.2												
		27.5	18 24,27	SS-8	90									
	Sand, very dense to dense, wet, brown, A-1-b, Lab No. 4115SL													
		405.7												
	B.T.H. 35.0'		13 18,24	SS-9	80									

Remarks * Test hole drilled from floating platform in 7.1' of water; wash boring from 18.5' to 35.0'.

Driller: M. Denney Inspector: C. McGee Weather: Sunny Temp: 85 F

BORING NO. TB-16

test boring record

Sheet 1 of 2 Structure No. 40-84-7279 J

PROJECT US40 over Wabash River
LOCATION in Vigo County, Indiana
CLIENT Gannett Fleming Transportation Engineers
ELEVATION 464.3 USC & GS STATION 68+98
FINAL BORING DEPTH 65.0' OFFSET 15'Lt. *PR-2* WATER LEVEL-FIRST 32' COMPLETION * 24 HR. *

PROJECT NO. M-T610(1) DATE STARTED 6-11-87
BORING METHOD HSA & WB DATE COMPLETED 6-11-87
RIG TYPE Truck CASING DIA. N/A CORE SIZE N/A
NO.SAMPLES 15 DISTURBED 15 UNDIST 0 CORE 0

Depth (ft)	Soils/Material Description	Stratum Depth (ft)	Standard Penetration Blows Per 6 in. (N)	Sample No.	Recovery (%)	Qu (tsf)	Qp (tsf)	Moisture (%)	Dry Density (pcf)	Atterberg Limits LL	PL	PI	Shelby Tube No.	Bag Sample No.
			8 6,9	SS-1	80									
			3 3,5	SS-2	90									
			5 4,4	SS-3	100			19.9						
	Sandy Loam, with cinders, concrete fragments, and brick fragments, medium dense to loose, moist, black, (fill) (visual)		3 3,1	SS-4	80									
			2 2,2	SS-5	90									
			4 3,4	SS-6	80									
		459.3												
		25.0	2 2,4	SS-7	90									
	Sand, medium dense, moist, brown, A-1-b, Lab No. 4115SL	454.3												
		30.0	9 10,13	SS-8	100									
	Silty Loam, very loose to loose, moist, gray, A-4(0), Lab No. 4117SL		3 2,3	SS-9	100			30.9			N/P	N/P	N/P	
		443.3												
		41.0	3 2,4	SS-10	100									
	Sand, medium dense to very dense, wet, brown A-1-b, Lab No. 4115SL		10 11,14	SS-11	80									

Remarks Wash boring from 41.0' to 65.0' * Test hole caved into 25.0'; dry above 25.0'.

Driller: O. Cornelius Inspector: C. McGee Weather: Cloudy Temp: 80°F

BORING NO. TB-14

test boring record

Sheet 2 of 2

Depth (ft)	Soils/Material Description	Stratum Depth (ft)	Standard Penetration Blows Per 6 in. (N)	Sample No.	Recovery (%)	Qu (tsf)	Qp (tsf)	Moisture (%)	Dry Density (pcf)	Atterberg Limits LL	PL	PI	Shelby Tube No.	Bag Sample No.
	Sand, dense to very dense, wet, brown, A-1-b, Lab No. 4115SL													
		389.1												
	B.T.H. 50.0'		6 18,40	SS-12	100									

Remarks

BORING NO. TB-13

test boring record

Sheet 1 of 1 Structure No. 40-84-7279 J

PROJECT US40 over Wabash River
LOCATION in Vigo County, Indiana
CLIENT Gannett Fleming Transportation Engineers
ELEVATION 442.7 USC & GS STATION 65+36
FINAL BORING DEPTH 35.0' OFFSET 15'Rt. *PR-2* WATER LEVEL-FIRST * COMPLETION * 24 HR. *

PROJECT NO. M-T610(1) DATE STARTED 6-19-87
BORING METHOD HSA & WB DATE COMPLETED 6-19-87
RIG TYPE Skid CASING DIA. N/A CORE SIZE N/A
NO.SAMPLES 9 DISTURBED 9 UNDIST 0 CORE 0

Depth (ft)	Soils/Material Description	Stratum Depth (ft)	Standard Penetration Blows Per 6 in. (N)	Sample No.	Recovery (%)	Qu (tsf)	Qp (tsf)	Moisture (%)	Dry Density (pcf)	Atterberg Limits LL	PL	PI	Shelby Tube No.	Bag Sample No.
			2 1,1	SS-1	45									
			2 0,1	SS-2	45									
	Gravelly Sand, very loose, wet, brown, occasional coarse gravel seam, A-1-b, Lab No. 4113SL		4 2,2	SS-3	50									
			2 2,2	SS-4	55									
		429.2												
		13.5	7 9,15	SS-5	70									
	Sand & Gravel, medium dense to dense, wet, brown, occasional coarse gravel seams, and small boulders, A-1-a, Lab No. 4116SL		14 17,22	SS-6	100									
		415.7												
		27.0	16 21,28	SS-7	100									
	Sandy Gravel, dense, wet, brown, occasional small boulders, A-1-a, Lab No. 4112SL		35 19,23	SS-8	70									
		407.7												
	B.T.H. 35.0'		28 26,21	SS-9	80									

Remarks * Test hole drilled from floating platform in 4.5' of water; wash boring from 18.5' to 35.0'.

Driller: M. Denney Inspector: C. McGee Weather: Rain Temp: 85°F

BORING NO. TB-16

test boring record

Sheet 2 of 2

Depth (ft)	Soils/Material Description	Stratum Depth (ft)	Standard Penetration Blows Per 6 in. (N)	Sample No.	Recovery (%)	Qu (tsf)	Qp (tsf)	Moisture (%)	Dry Density (pcf)	Atterberg Limits LL	PL	PI	Shelby Tube No.	Bag Sample No.
			19 24,32	SS-12	80									
	Sand, med. dense to very dense, wet, brown, A-1-b, Lab No. 4115SL		14 20,32	SS-13	65									
			14 22,27	SS-14	65									
		419.3												
	B.T.H. 65.0'		15 15,17	SS-15	35									

Remarks

SOIL BORINGS

INDIANA DEPARTMENT OF ~~HIGHWAYS~~ TRANSPORTATION
VIGO COUNTY

SCALE:- No Scale DATE:- 19

SHEET- 25 OF 92

PROJECT:- ~~SP-T610(1)~~ M-T610(1)
BRIDGE CONTRACT NO. B-18969
BRIDGE FILE:- 40-84-7279

HENRY C. RHEE REGISTERED No. 13692 STATE OF INDIANA PROFESSIONAL ENGINEER

DESIGNED JEE C'K'D JG
DRAWN JEE C'K'D JG
TRACED C'K'D

SF-22317

TP101

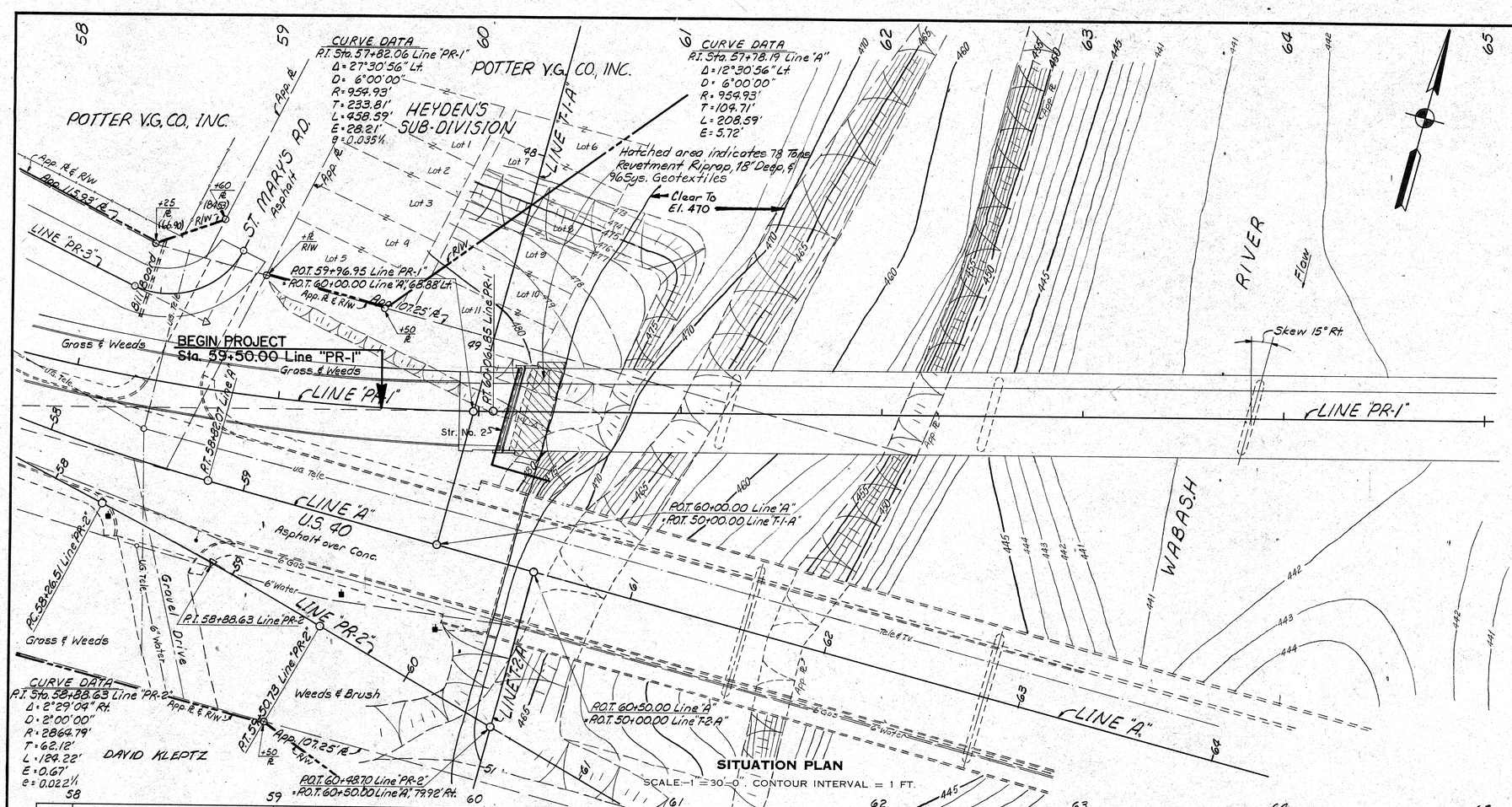

SITUATION PLAN

SCALE:—1" = 30'—0", CONTOUR INTERVAL = 1 FT.

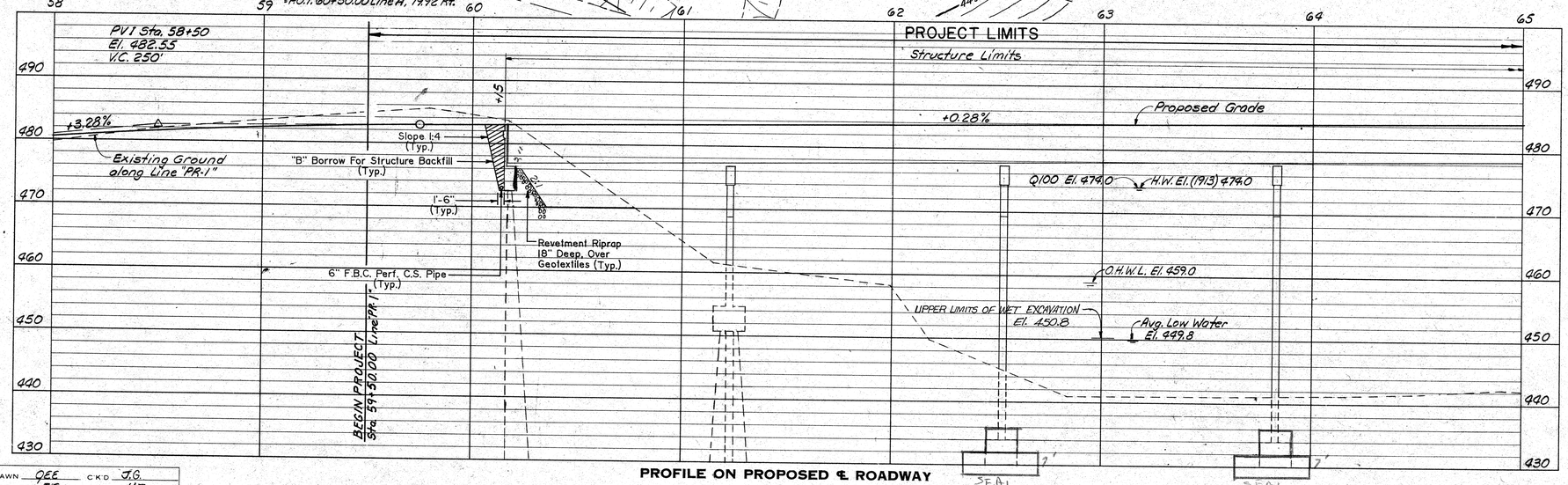

PROFILE ON PROPOSED ℄ ROADWAY

SCALES: HORIZ. 1" = 30'—0" VERT. 1" = 10'—0"

NOTE: FIELD NOTES, BOOK BR 2938

DRAWN QEE CK'D J.G.
DESIGNED J.G. CK'D H.Z.
TRACED ____ CK'D ____

SP-22396

UTILITY OWNERS

Electric	Public Service Indiana 125 Harding Ave. Terre Haute, IN
Telephone	General Telephone 711 Poplar Terre Haute, IN
	AT&T Consolidated Network (Fiber Optics Cable)
Gas	Terre Haute Gas Corp. 632 Cherry St. Terre Haute, IN
Water	Indiana-American Water Co., Inc. 234 S. 8th St. Terre Haute, IN
Sewer	City of Terre Haute 17 Harding Ave. Terre Haute, IN

The present structure is a 7 span (3@120', 75', 3@120') square steel truss and girder bridge built from 1903 to 1905. The original 50'-0 clear roadway has been barricaded to 30'-0 clear roadway. Plans are on file in the Central Office under Stn № 40-84-5694c. Existing structure to remain in place and be used to maintain traffic during the construction of the WBL and EBL bridges.

HYDRAULIC DESIGN SUMMARY

Drainage Area	12,265 Sq. Mi.
Q100	150,000 CFs
Q100 El.	474.0 Ft., MSL
Existing Bridge Flow:	150,000 CFs (7.3 Fps)
Low Structure El.	473.6 Ft., MSL
Eff. Waterway Area	20,500 Sft below El. 474.0
Backwater El.	474.09 Ft., MSL
Proposed Bridge Flow:	150,000 CFs (7.3 Fps)
Low Structure El. "P.R.-1"	476.8 Ft., MSL
"P.R.-2"	477.1 Ft., MSL
Eff. Waterway Area	20,500 Sft. below El. 474.0
Backwater El.	474.09 Ft., MSL

EARTHWORK TABULATION

Fill + 20 %	630 Cu. Yds.
Dry Excavation	1550 Cu. Yds.
Common Excavation	1200 Cu. Yds.
Borrow (Undistributed)	100 Cu. Yds.
Waste	920 Cu. Yds.
Waterway Excavation	6050 Cu. Yds.
Wet Excavation	2800 Cu. Yds.

LAYOUT WBL

CONT. COMP. WELDED STEEL PLATE GIRDER BRIDGE
7 SPANS: 105'0, 2@130'0, 150'0, 2@130'0, 105'0
SKEW: 15° RT.; 32'0 CLEAR ROADWAY; 6'0 SIDEWALK
US 40 OVER WABASH RIVER

INDIANA DEPARTMENT OF ~~HIGHWAYS~~ TRANSPORTATION

VIGO COUNTY

SCALE:—AS NOTED DATE:— 19

DRAWING:- S1 OF 37 SHEET:- 26 OF 92
PROJECT:- M-T610(1) STATION:— 64+58
BRIDGE CONTRACT NO. B-18969
BRIDGE FILE:- 40-84-7279

HENRY C. RHEE REGISTERED No. 13692 STATE OF INDIANA PROFESSIONAL ENGINEER

TP117

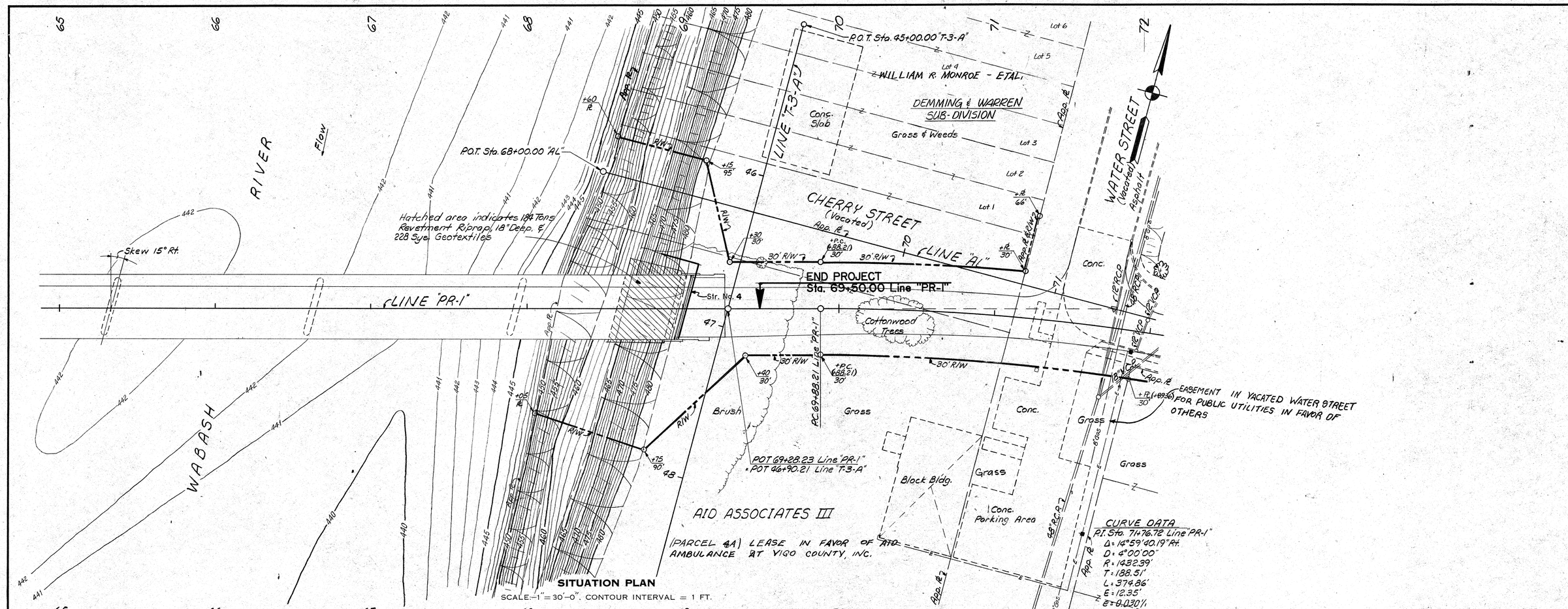

SITUATION PLAN

SCALE:-1" = 30'-0". CONTOUR INTERVAL = 1 FT.

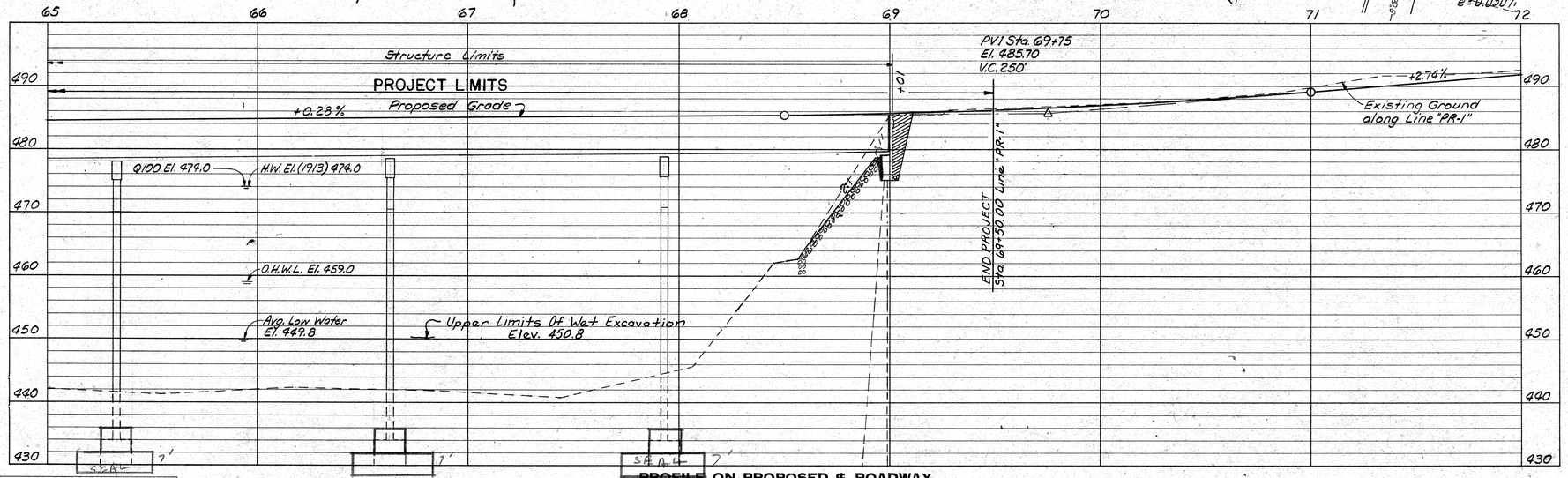

PROFILE ON PROPOSED ℄ ROADWAY

SCALES: HORIZ. 1" = 30'-0" VERT. 1" = 10'-0"

NOTE: FIELD NOTES, BOOK BR 2938

DRAWN GEE C'K'D JG
DESIGNED VG C'K'D HZ
TRACED C'K'D

SP-22396

LAYOUT WBL

CONT. COMP. WELDED STEEL PLATE GIRDER BRIDGE
7 SPANS: 105'-0, 2@130'-0, 150'-0, 2@130'-0, 105'-0
SKEW: 15° RT.; 32'-0 CLEAR ROADWAY; 6'-0 SIDEWALK
US 40 OVER WABASH RIVER

INDIANA DEPARTMENT OF ~~HIGHWAYS~~ TRANSPORTATION
VIGO COUNTY

SCALE:-AS NOTED DATE:- 19

DRAWING:- S2 OF 37 SHEET:- 27 OF 92
PROJECT:- M-T610(1) STATION:- 64+58
BRIDGE CONTRACT NO. B-18969
BRIDGE FILE:- 40-84-7279

HENRY C. RHEE REGISTERED No. 13692 STATE OF INDIANA PROFESSIONAL ENGINEER

TP117

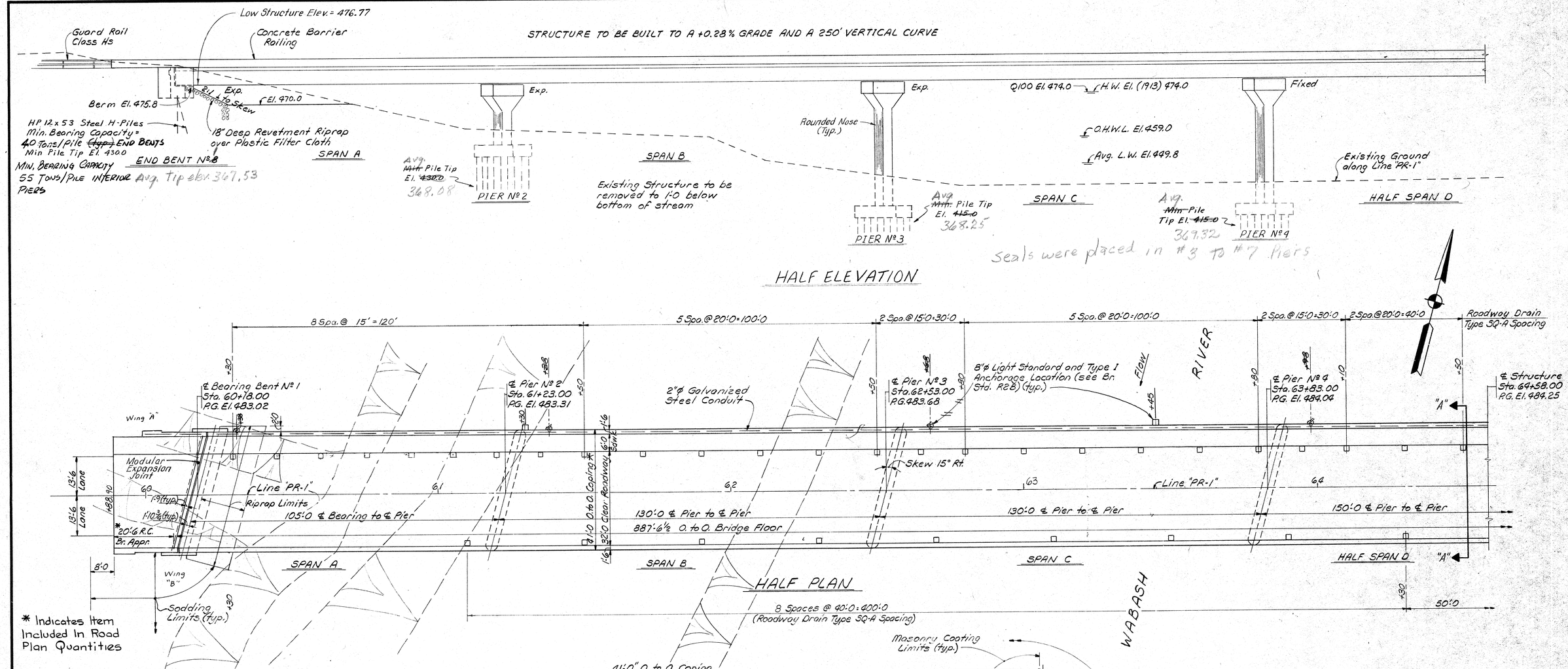

NOTES:

1. For general notes and design data SEE DWG. S4.
2. For index of standard drawings SEE DWG. S19.

GENERAL PLAN WBL

CONT. COMP. WELDED STEEL PLATE GIRDER BRIDGE
7 SPANS: 105'-0, 2@130'-0, 150'-0, 2@130'-0, 105'-0
SKEW: 15° RT.; 32'-0 CLEAR ROADWAY; 6'-0 SIDEWALK
U.S. 40 OVER WABASH RIVER

INDIANA DEPARTMENT OF ~~HIGHWAYS~~ TRANSPORTATION
VIGO COUNTY

SCALE:- 1/16" = 1'-0 Unless Noted DATE:- 19

DRAWING:- S3 OF 37 SHEET:- 28 OF 92
PROJECT:- M-T610(1) STATION:- 64+58
BRIDGE CONTRACT NO. B-18969
BRIDGE FILE:- 40-84-7279

HENRY C. RHEE No. 13692 STATE OF INDIANA PROFESSIONAL ENGINEER

DESIGNED HZ C'K'D JG
DRAWN QEF C'K'D JG
TRACED C'K'D

SF-22317

** Slope Varies in Spans A, B and C. (See Superelevation Diagrams, Sht. No. 5 and 6)

Revised 1-4-91 Min Bearing Capacity

* Not to Scale

Rev. 6/19/91 Revised location of light fixtures

TP101

STRUCTURE TO BE BUILT TO A +0.28% GRADE AND A 250' VERTICAL CURVE

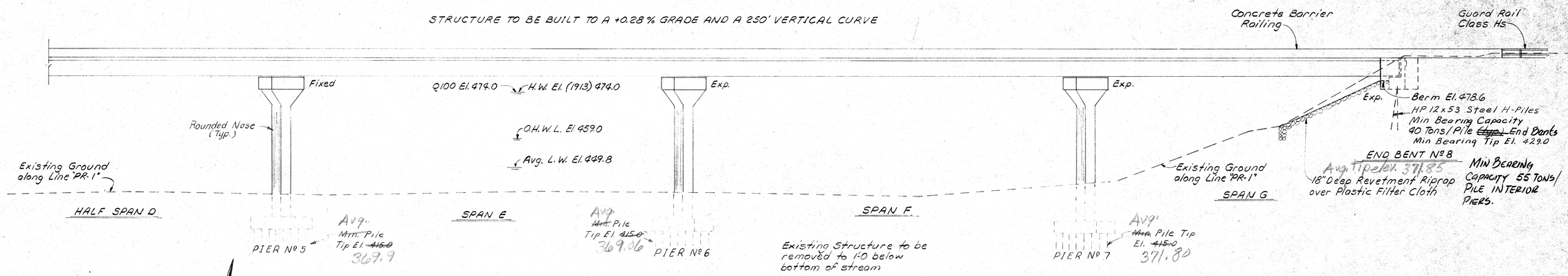

HALF ELEVATION

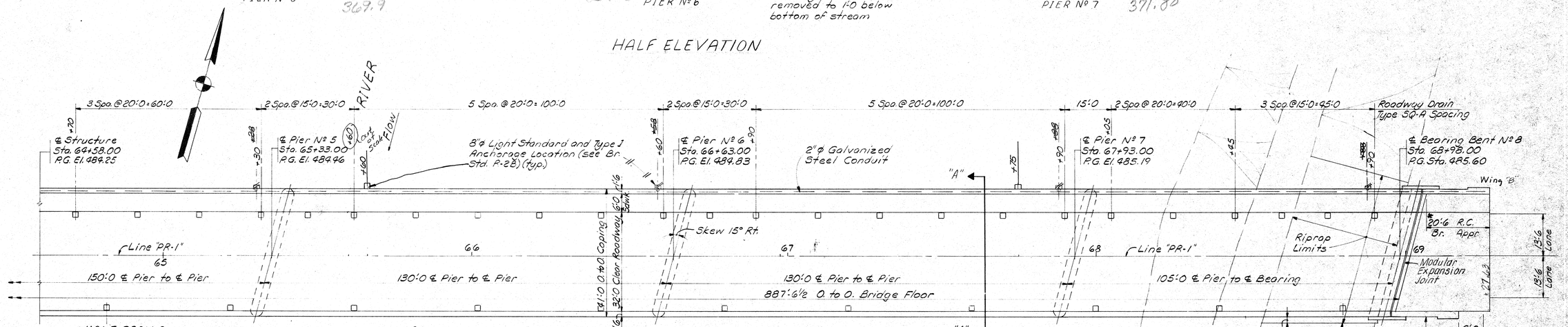

HALF PLAN

10 Spaces @ 40'0 = 400'0
(Roadway Drain Type SQ-A Spacing)

* Indicates Item Included In Road Plan Quantites

GENERAL NOTES

Depth of footings to be extended if found necessary. See Article 206.11(C) of Specifications.

Piles shall have minimum bearing value shown on detail drawings.

Determine pile lengths by Article 701 of the Specifications.

Tolerance in position of pile head maximum 2 inches at end bents.

Reinforcing steel covering shall be 2 1/2" in top and 1" minimum in bottom of floor slabs, 3" in footings except bottom steel which shall be 4" and 2" in all other parts, unless noted.

Continuous concrete pours shall be required between construction joints as shown on detail plans.

Concrete in end bents, bent caps, top of pier stem down to construction joint to be Class "A".

Concrete in footings and pier stems to construction joint (for hammerhead piers) to be Class "B".

Concrete in Superstructure and railings to be Class "C". All reinforcing steel in deck and railing shall be epoxy coated.

For details of steel H-Piles, see Bridge Std. C1 and applicable articles of the Specifications.

Chamfer exposed edges 1", unless noted.

Place riprap as indicated of locations shown on Layout.

Only the bridge seats of end bents, the top and front face of mudwalls, top of deck, the front face, top and coping face of barrier rail on bridge, face of deck coping and underside of bridge floor from coping to outside beam to be sealed. All surface seal will be paid for as Lump Sum.

Piles shall be driven to elevation shown on plans or below if necessary to obtain required bearing.

DESIGN DATA

Designed for HS20-44 loading in accordance with 1983 AASHTO Specifications and subsequent Interim AASHTO Specifications.

Designed in accordance with 1983 AASHTO "Guide Specifications for Seismic Design of Highway Bridges" using Seismic Performance Category "B" and 0.1 acceleration coefficient.

ALLOWABLE STRESSES: To be in accordance with 1983 A.A.S.H.T.O. Specifications.

NOTES:

1. For typical section "A-A" SEE DWG. S3.
2. For index of standard drawings SEE DWG. SI9.

Note changes

GENERAL PLAN WBL

CONT. COMP. WELDED STEEL PLATE GIRDER BRIDGE
7 SPANS: 105'0, 2@130'0, 150'0, 2@130'0, 105'0
SKEW: 15° RT.; 32'0 CLEAR ROADWAY; 6'0 SIDEWALK
U.S. 40 OVER WABASH RIVER

INDIANA DEPARTMENT OF ~~HIGHWAYS~~ TRANSPORTATION
VIGO COUNTY

SCALE:- 1/16" = 1'0 Unless Noted DATE:- 19

DRAWING:- S4 OF 37 SHEET:- 29 OF 92
PROJECT:- M-T610(1) STATION:- 64+58
BRIDGE CONTRACT NO. B-18969
BRIDGE FILE:- 40-84-7279

HENRY C. RHEE — REGISTERED — No. 12002 — STATE OF INDIANA

DESIGNED	HZ	C'K'D	JG
DRAWN	GEE	C'K'D	JG
TRACED		C'K'D	

SF-22317

REVISED 1-4-91 MIN BEARING CAPACITY. Rev. 6/19/91 Revised location of light fixtures.

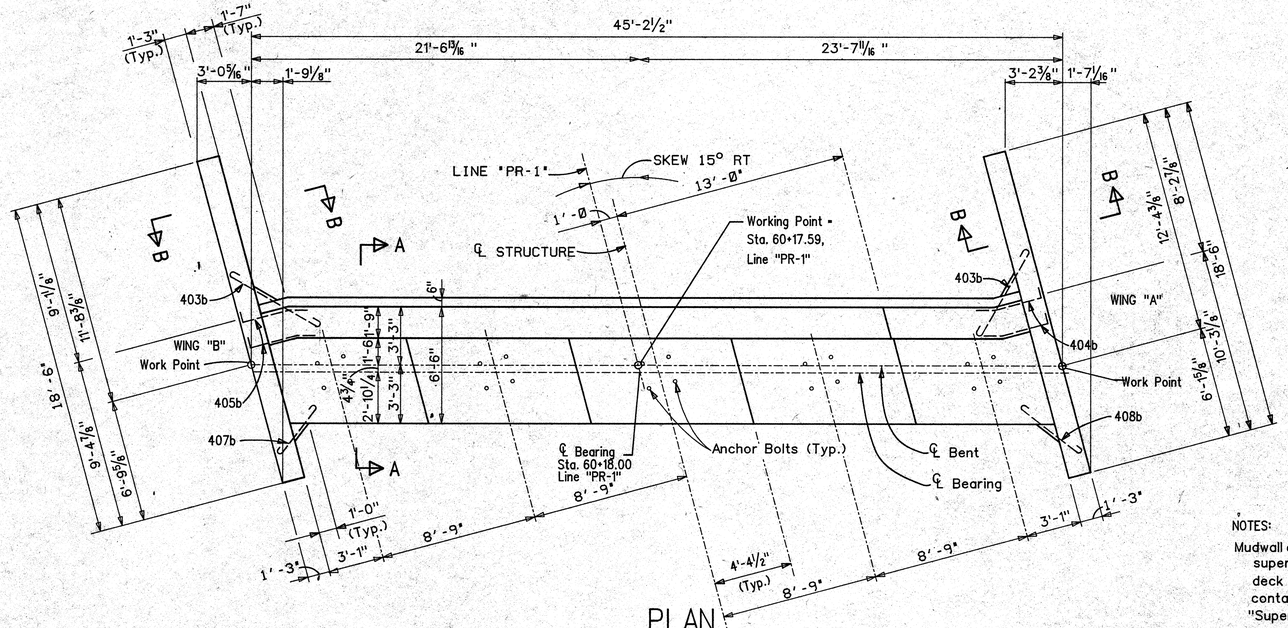

END BENT No. 1 WBL ELEVATIONS DIAGRAM

Scale: ⅛" = 1'-0"

END BENT No 1 WBL DETAILS

INDIANA DEPARTMENT OF TRANSPORTATION

VIGO COUNTY

SCALE:- ¼" = 1'-0" Unless Noted DATE:- 19

DESIGNED AHIDOT C'K'D NKB
DRAWN MAH C'K'D NKB
TRACED ____ C'K'D ____

DRAWING:- S5 OF 37 SHEET:- 30 OF 92
PROJECT:- M-T610(1)
BRIDGE CONTRACT NO. B-18969
BRIDGE FILE:- 40-84-7279

HENRY C. RHEE REGISTERED No. 13692 STATE OF INDIANA PROFESSIONAL ENGINEER

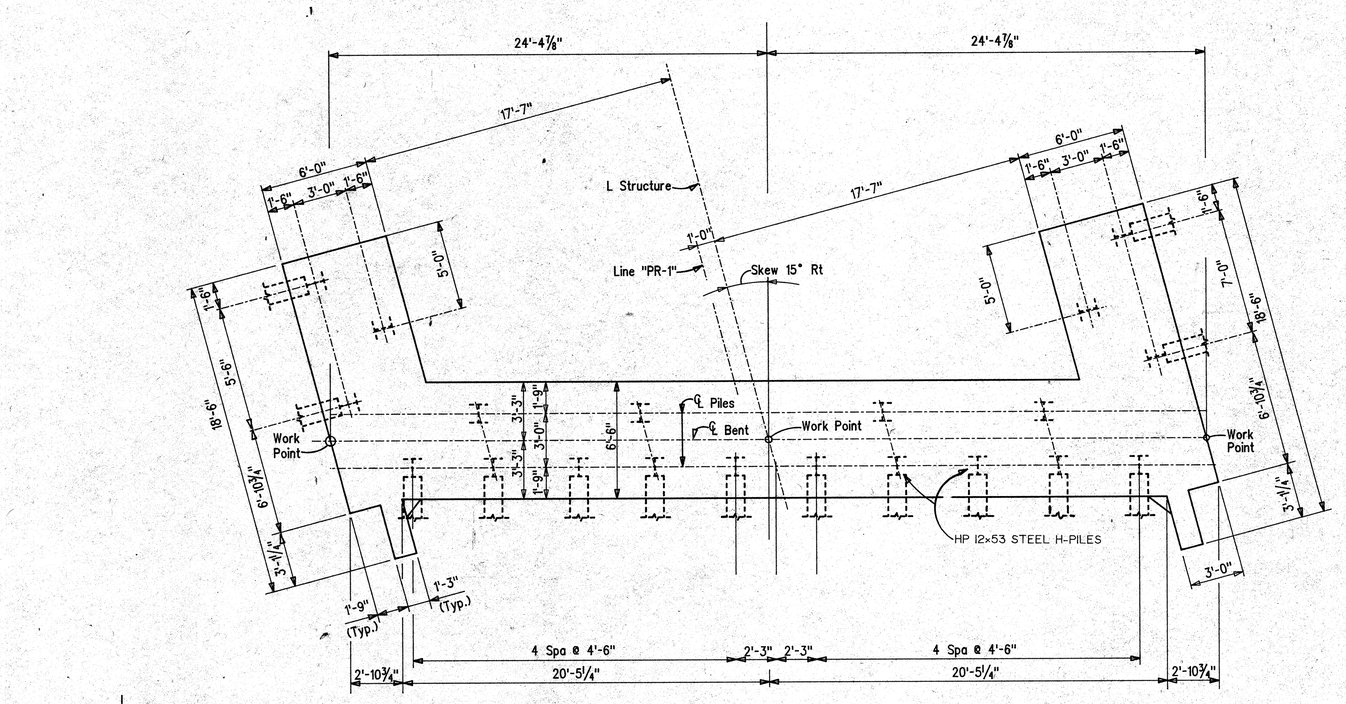

FOOTING PLAN

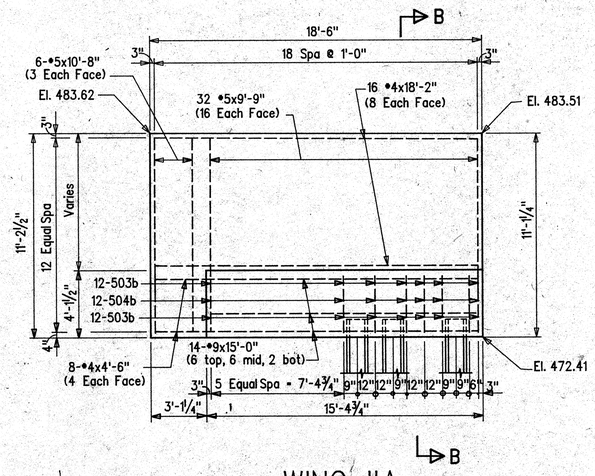

WING "A"

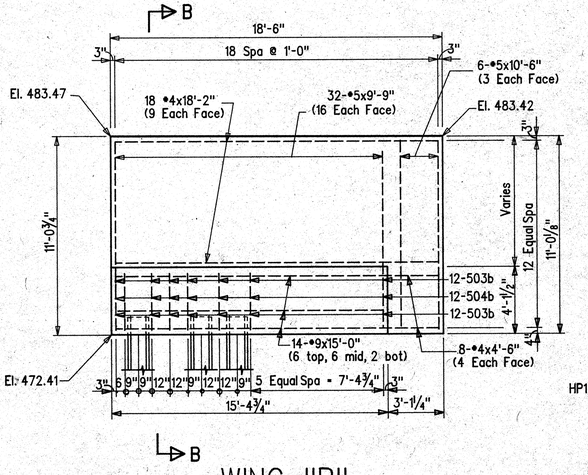

WING "B"

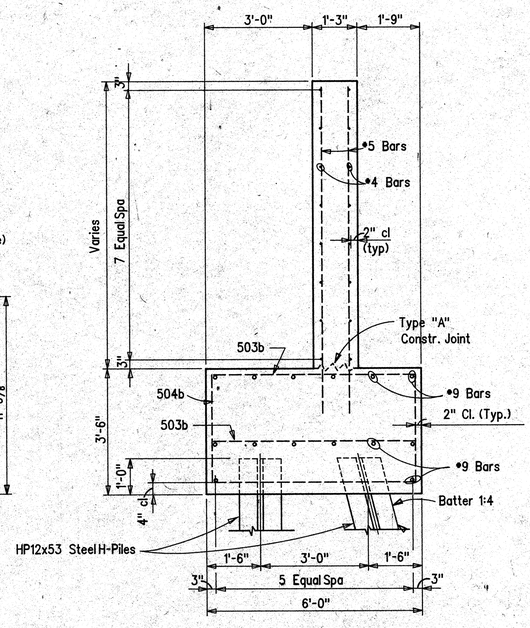

SECTION "B-B"

Scale: ½" = 1'-0"

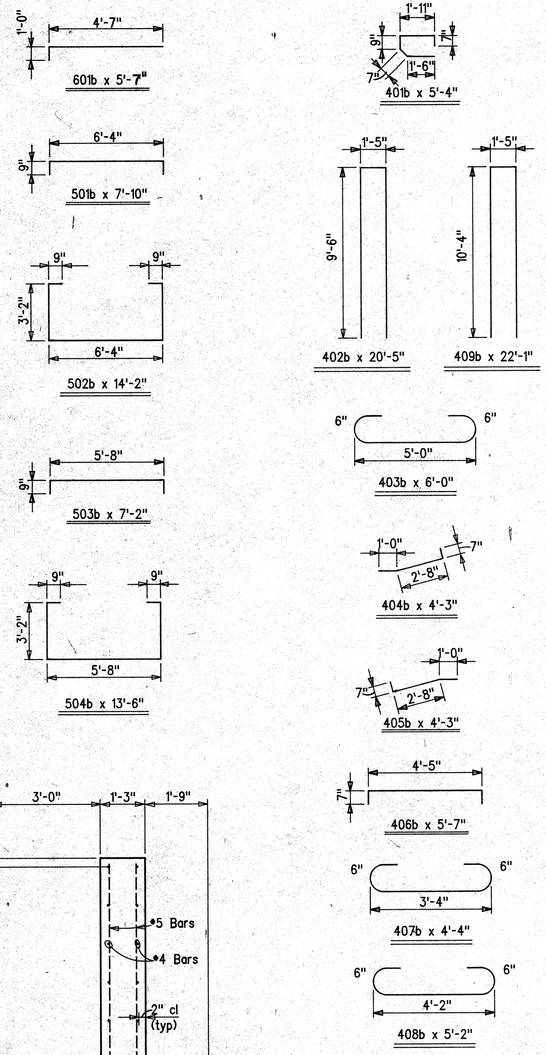

BILL OF MATERIALS

EPOXY COATED REINFORCING STEEL			
SIZE OR MARK	NO OF BARS	LENGTH	WEIGHT (lbs)
•9	28	15'-0"	
•9	36	24'-3"	
	Total No 9		4396
501b	90	7'-10"	
502b	40	14'-2"	
503b	48	7'-2"	
504b	24	13'-6"	
•5	64	9'-9"	
•5	6	10'-8"	
•5	6	10'-6"	
	Total No 5		2806
402b	35	20'-5"	
403b	12	6'-0"	
404b	20	4'-3"	
405b	18	4'-3"	
406b	6	5'-7"	
407b	3	4'-4"	
408b	3	5'-2"	
409b	8	22'-1"	
•4	12	39'-4"	
•4	36	18'-2"	
•4	16	4'-6"	
•4	8	10'-4"	
•4	4	7'-4"	
	Total No 4		1668
Total Epoxy Coated Reinf Steel			8870
CONCRETE			
Class "A"		~~83.6~~ Cys	
		84.6	
MISCELLANEOUS			
Surface Seal (Estimated Quantity)		600 Sft	
HP12x53 Steel H-Piles (20x43.4)		868 Lft	
1"x15" Steel Anchor Bolts w/Flat Washers and Hex-Nuts		20 Each	

NOTES:
For Reinforcing Bar Notes, see Bridge Standard **C1**
For Constr Joint Type "A", see Bridge Standard **C3**
For Additional Details, see Dwg. **S5**.

END BENT No 1 WBL DETAILS

INDIANA DEPARTMENT OF TRANSPORTATION

VIGO COUNTY

SCALE:- ¼" = 1'-0" Unless Noted DATE:- 19

DESIGNED MRDAP C'K'D MRB
DRAWN MAH C'K'D MRB
TRACED ____ C'K'D ____

DRAWING:- **S6** OF **37** SHEET:- **31** OF **92**
PROJECT:- **M-T610(1)**
BRIDGE CONTRACT NO. **B-18969**
BRIDGE FILE:- 40-84-7279

HENRY C. RHEE REGISTERED No. 13692 STATE OF INDIANA PROFESSIONAL ENGINEER

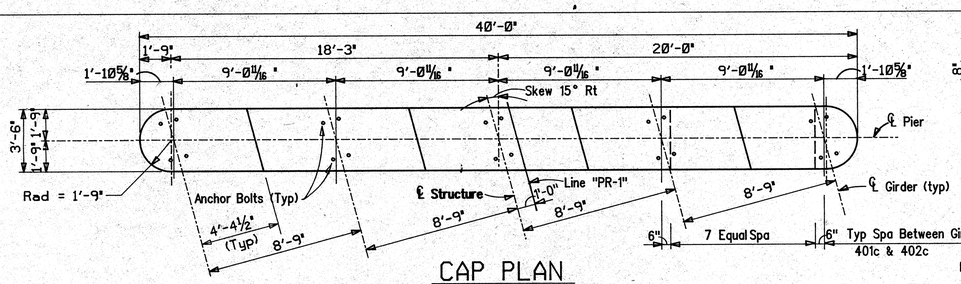

CAP PLAN

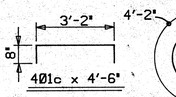

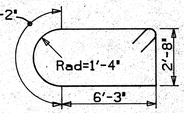

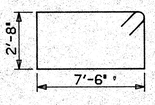

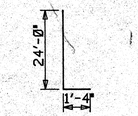

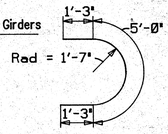

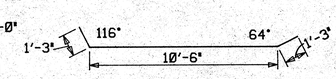

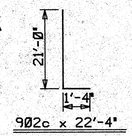

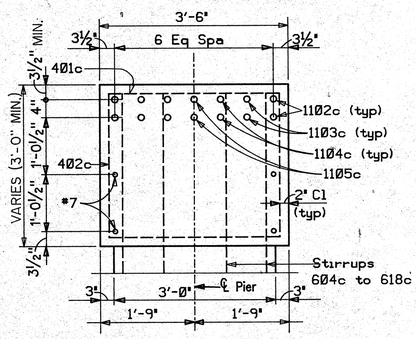

SECTION "BB"

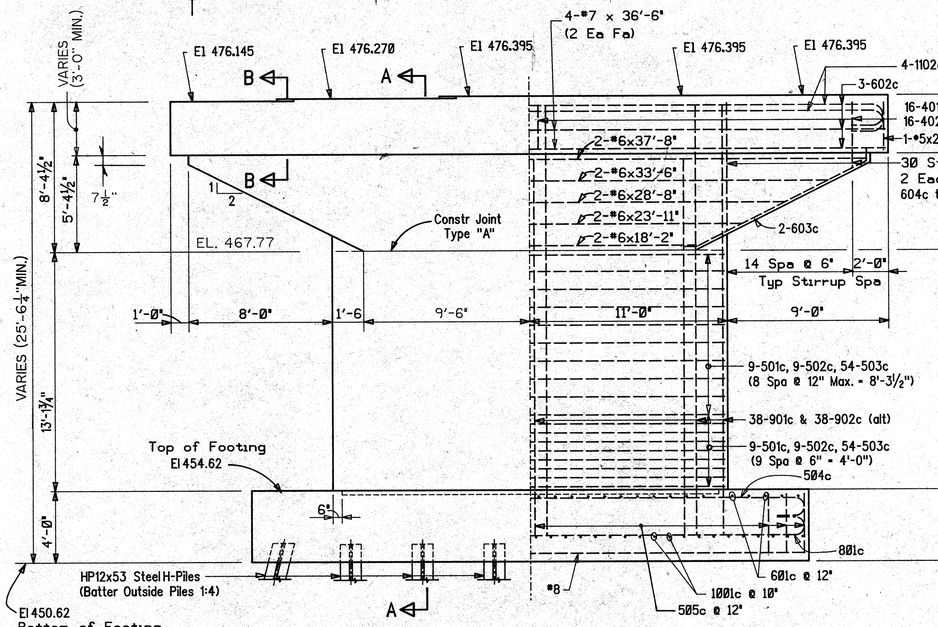

ELEVATION

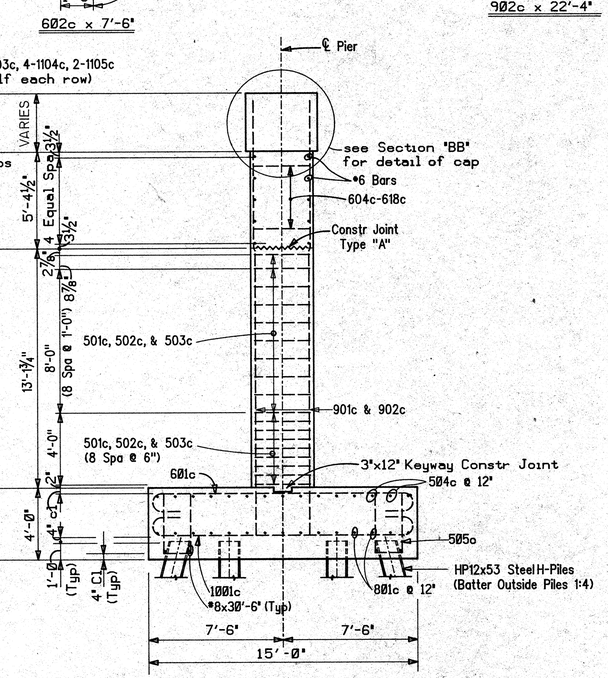

SECTION "AA"

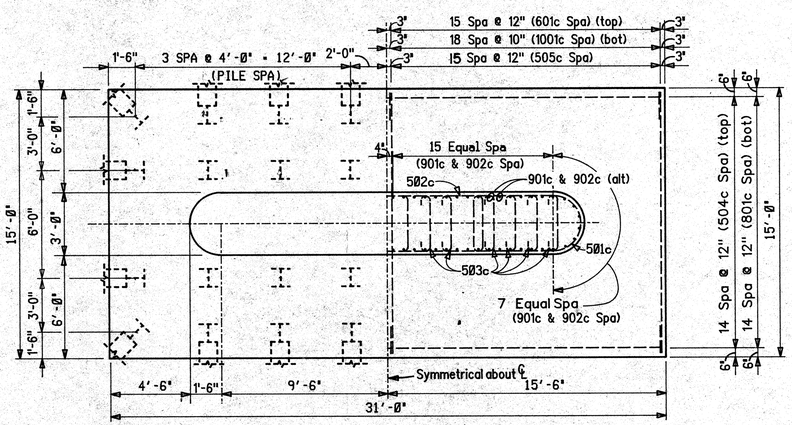

FOOTING PLAN

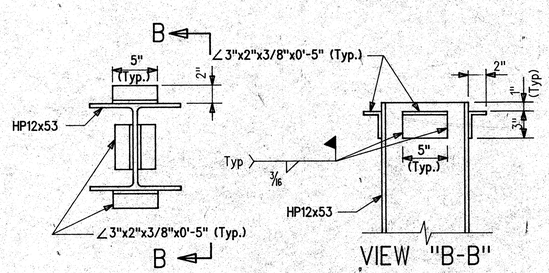

PILE ANCHORAGE DETAIL

Scale: ½" = 1"

Note: Cost of Pile Anchorage to be included in the cost of piling.

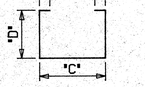

MARK	"A"	"B"	LENGTH
1102c	36'-0"	1'-7"	39'-2"
1103c	38'-6	1'-7"	41'-8"
1104c	39'-2	1'-7"	42'-4"
1105c	39'-5	1'-7"	42'-7"
1001c	14'-6"	1'-5"	17'-4"
801c	30'-6"	11"	32'-4"
601c	14-6"	8"	15'-10"
503c	2'-8"	8"	4'-0"
504c	30'-6"	8"	31'-10"

MARK	"C"	"D"	"E"	LENGTH
604c	2'-4"	3'-8"	1'-0"	11'-8"
605c	2'-4"	3'-11"	1'-0"	12'-2"
606c	2'-4"	4'-2"	1'-0"	12'-8"
607c	2'-4"	4'-5"	1'-0"	13'-2"
608c	2'-4"	4'-8"	1'-0"	13'-8"
609c	2'-4"	4'-11"	1'-0"	14'-2"
610c	2'-4"	5'-2"	1'-0"	14'-8"
611c	2'-4"	5'-5"	1'-0"	15'-2"
612c	2'-4"	5'-8"	1'-0"	15'-8"
613c	2'-4"	5'-11"	1'-0"	16'-2"
614c	2'-4"	6'-2"	1'-0"	16'-8"
615c	2'-4"	6'-5"	1'-0"	17'-2"
616c	2'-4"	6'-8"	1'-0"	17'-8"
617c	2'-4"	6'-11"	1'-0"	18'-2"
618c	2'-4"	7'-2"	1'-0"	18'-8"
505c	1'-6"	3'-4"	0"	8'-2"
402c	3'-2"	2'-8"	8"	9'-10"

Notes:
For Reinforcing Bar Notes, see Bridge Standard C1.
See Bottom Bearing Plate Detail for Anchor Bolt Spacing

BILL OF MATERIALS

REINFORCING STEEL			
SIZE OR MARK	NO OF BARS	LENGTH	WEIGHT (lbs)
1102c	4	39'-2"	
1103c	4	41'-8"	
1104c	4	42'-4"	
1105c	2	42'-7"	
	Total	No 11	3070
1001c	38	17'-4"	
	Total	No 10	2834
901c	38	25'-4"	
902c	38	22'-4"	
	Total	No 9	6159
801c	15	32'-4"	
*8	4	30'-6"	
	Total	No 8	1621
*7	4	36'-6"	
	Total	No 7	298
601c	32	15'-10"	
602c	6	7'-6"	
603c	4	13'-0"	
604c	4	11'-8"	
605c	4	12'-2"	
606c	4	12'-8"	
607c	4	13'-2"	
608c	4	13'-8"	
609c	4	14'-2"	
610c	4	14'-8"	
611c	4	15'-2"	
612c	4	15'-8"	
613c	4	16'-2"	
614c	4	16'-8"	
615c	4	17'-2"	
616c	4	17'-8"	
617c	4	18'-2"	
618c	4	18'-8"	
*6	2	37'-8"	
*6	2	33'-6"	
*6	2	28'-8"	
*6	2	23'-11"	
*6	2	18'-2"	
	Total	No 6	2700
501c	36	20'-8"	
502c	36	21'-8"	
503c	216	4'-0"	
504c	15	31'-10"	
505c	64	8'-2"	
*5	2	2'-8"	
	Total	No 5	3543
401c	32	4'-6"	
402c	32	9'-10"	
	Total	No 4	306
Total Reinforcing Steel			20,531
Surface Seal			200 SFT
MISCELLANEOUS			
HP12x53 Steel H-Piles (32x 21.6)			692 Lft
1"x15" Steel Anchor Bolts w/ Flat Washer and Hex-Nut			20 Ea.
CONCRETE			
Class "B" in Footing			68.9 CYS
Class "B" above Footing			31.1CYS
Class "A"			33.8 CYS

PIER No. 2 WBL DETAILS

INDIANA DEPARTMENT OF TRANSPORTATION

VIGO COUNTY

SCALE:- 1/4" = 1'-0" Unless Noted DATE:- 19

DESIGNED H/T/GM C'K'D NKB
DRAWN MAH C'K'D NKB
TRACED ____ C'K'D ____

Left side shows concrete dimensions and pile spacing

Right side shows reinforcing steel

DRAWING:- S7 OF 37 SHEET:- 32 OF 92
PROJECT:- M-T610(1)
BRIDGE CONTRACT NO. B-18969
BRIDGE FILE:- 40-84-7279

HENRY C. RHEE REGISTERED No. 13692 STATE OF INDIANA PROFESSIONAL ENGINEER

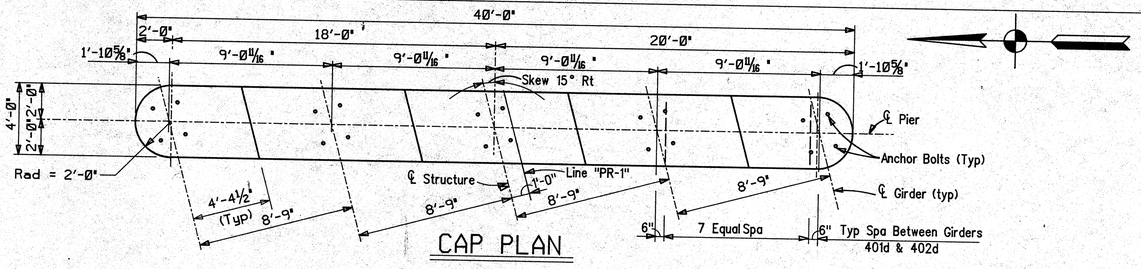

CAP PLAN

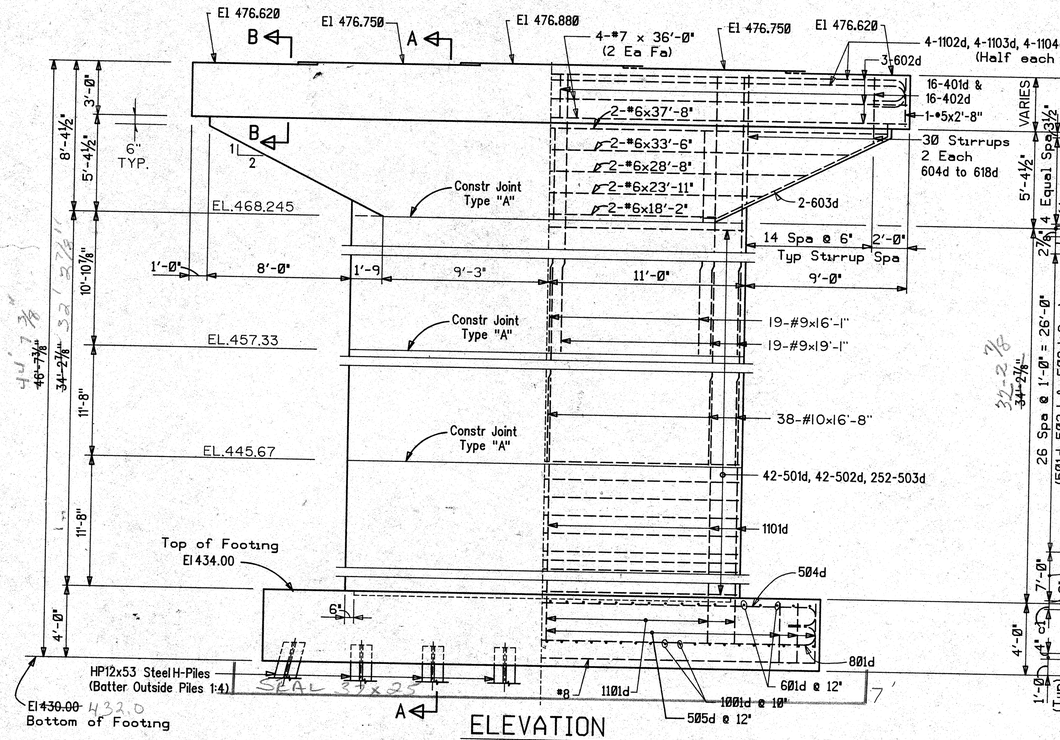

ELEVATION

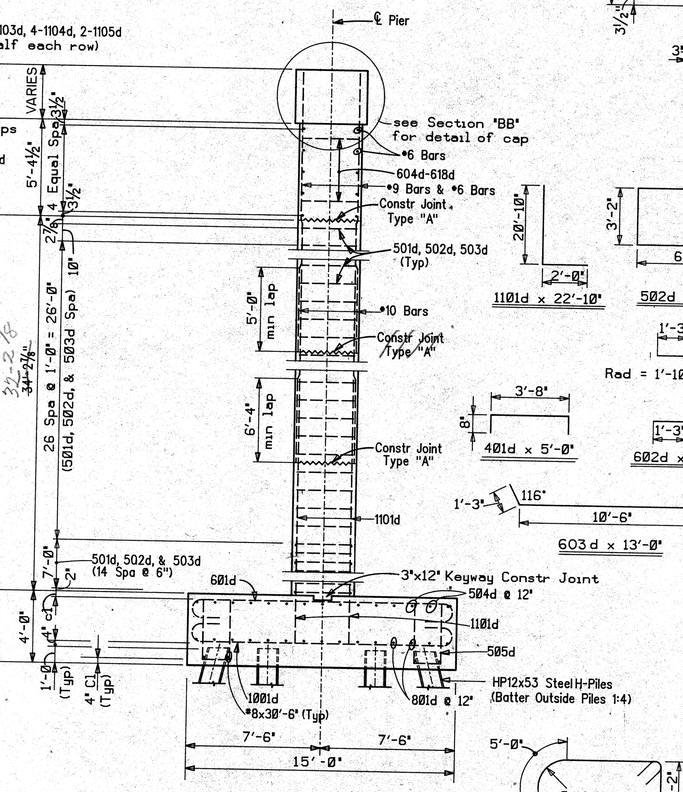

SECTION "AA"

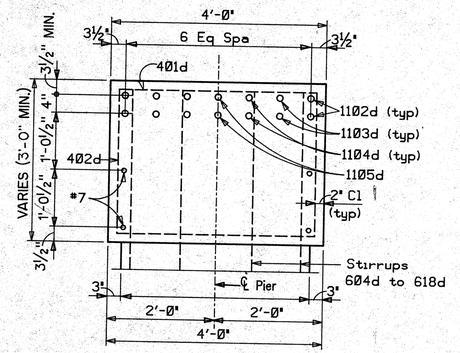

SECTION "BB"

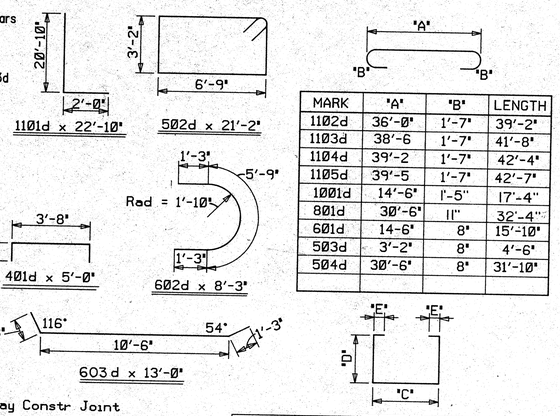

MARK	"A"	"B"	LENGTH
1102d	36'-0"	1'-7"	39'-2"
1103d	38'-6	1'-7"	41'-8"
1104d	39'-2	1'-7"	42'-4"
1105d	39'-5	1'-7"	42'-7"
1001d	14'-6"	1'-5"	17'-4"
801d	30'-6"	11"	32'-4"
601d	14-6"	8"	15'-10"
503d	3'-2"	8"	4'-6"
504d	30'-6"	8"	31'-10"

MARK	"C"	"D"	"E"	LENGTH
604d	2'-4"	3'-8"	1'-0"	11'-8"
605d	2'-4"	3'-11"	1'-0"	12'-2"
606d	2'-4"	4'-2"	1'-0"	12'-8"
607d	2'-4"	4'-5"	1'-0"	13'-2"
608d	2'-4"	4'-8"	1'-0"	13'-8"
609d	2'-4"	4'-11"	1'-0"	14'-2"
610d	2'-4"	5'-2"	1'-0"	14'-8"
611d	2'-4"	5'-5"	1'-0"	15'-2"
612d	2'-4"	5'-8"	1'-0"	15'-8"
613d	2'-4"	5'-11"	1'-0"	16'-2"
614d	2'-4"	6'-2"	1'-0"	16'-8"
615d	2'-4"	6'-5"	1'-0"	17'-2"
616d	2'-4"	6'-8"	1'-0"	17'-8"
617d	2'-4"	6'-11"	1'-0"	18'-2"
618d	2'-4"	7'-2"	1'-0"	18'-8"
505d	1'-6"	3'-4"	0"	8'-2"
402d	3'-8"	2'-8"	8"	10'-4"

Notes:
For Reinforcing Bar Notes, see Bridge Standard C1.
See Bottom Bearing Plate Detail for Anchor Bolt Spacing

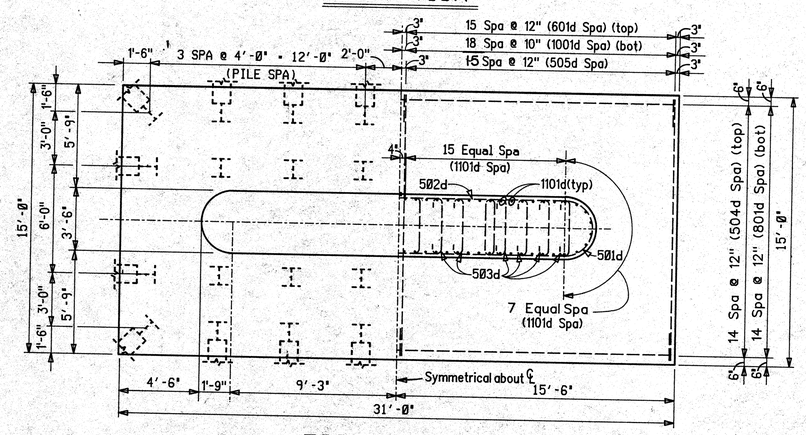

FOOTING PLAN

Left side shows concrete dimensions and pile spacing

Right side shows reinforcing steel

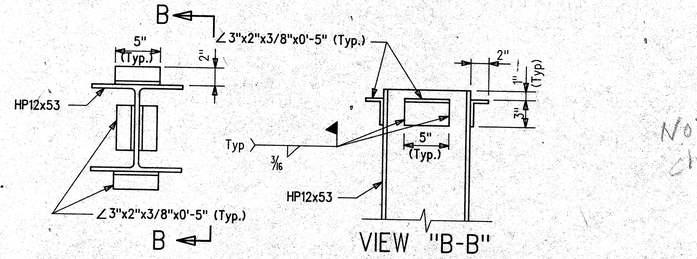

VIEW "B-B"

PILE ANCHORAGE DETAIL

Scale: 1/2" = 1"

Note: Cost of Pile Anchorage to be included in the cost of piling.

BILL OF MATERIALS

REINFORCING STEEL

SIZE OR MARK	NO OF BARS	LENGTH	WEIGHT (lbs)
1101d	76	22'-10"	
1102d	4	39'-2"	
1103d	4	41'-8"	
1104d	4	42'-4"	
1105d	2	42'-7"	
	Total No 11		12290
1001d	38	17'-4"	
#10	76	16'-8"	
	Total No 10		8285
#9	38	19'-1"	
#9	38	16'-1"	
	Total No 9		4544
801d	15	32'-4"	
#8	4	30'-6"	
	Total No 8		1621
#7	4	36'-0"	
	Total No 7		294
601d	32	15'-10"	
602d	6	8'-3"	
603d	4	13'-0"	
604d	4	11'-8"	
605d	4	12'-2"	
606d	4	12'-8"	
607d	4	13'-2"	
608d	4	13'-8"	
609d	4	14'-2"	
610d	4	14'-8"	
611d	4	15'-2"	
612d	4	15'-8"	
613d	4	16'-2"	
614d	4	16'-8"	
615d	4	17'-2"	
616d	4	17'-8"	
617d	4	18'-2"	
618d	4	18'-8"	
#6	2	37'-8"	
#6	2	33'-6"	
#6	2	28'-8"	
#6	2	23'-11"	
#6	2	18'-2"	
	Total No 6		2707
501d	84	17'-10"	
502d	84	21'-2"	
503d	504	4'-6"	
504d	15	31'-10"	
505d	64	8'-2"	
#5	2	2'-8"	
	Total No 5		6831
401d	32	5'-0"	
402d	32	10'-4"	
	Total No 4		328
Total Reinforcing Steel			36,900
Surface Seal			200 SFT
	MISCELLANEOUS		
HP12x53 Steel H-Piles (32x16)=			512 Lft
1"x15" Steel Anchor Bolts w/ Flat Washer & Hex-Nut			20 Ea.
	CONCRETE		
Class "B" in Footing			68.9 CYS
Class "B" above Footing			~~94.3 CYS~~ 88.8
Class "A"			38.6 CYS

CONCRETE FOUNDATION SEAL 230 (6-4-D)

Note change

PIER No 3 WBL DETAILS

INDIANA DEPARTMENT OF TRANSPORTATION

VIGO COUNTY

SCALE:- 1/4" = 1'-0" Unless Noted

DATE:- 19

DESIGNED AJZ/SAD C'K'D NKB
DRAWN MAH C'K'D NKB
TRACED ____ C'K'D ____

DRAWING:- S8 OF 37 SHEET: 33 OF 92
PROJECT:- M-T610(1)
BRIDGE CONTRACT NO. B-18969
BRIDGE FILE:- 40-84-7279

HENRY C. RHEE REGISTERED No. 13692 STATE OF INDIANA PROFESSIONAL ENGINEER

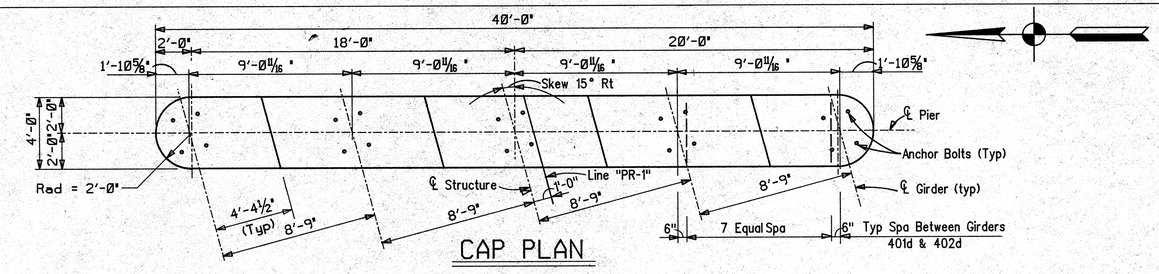

CAP PLAN

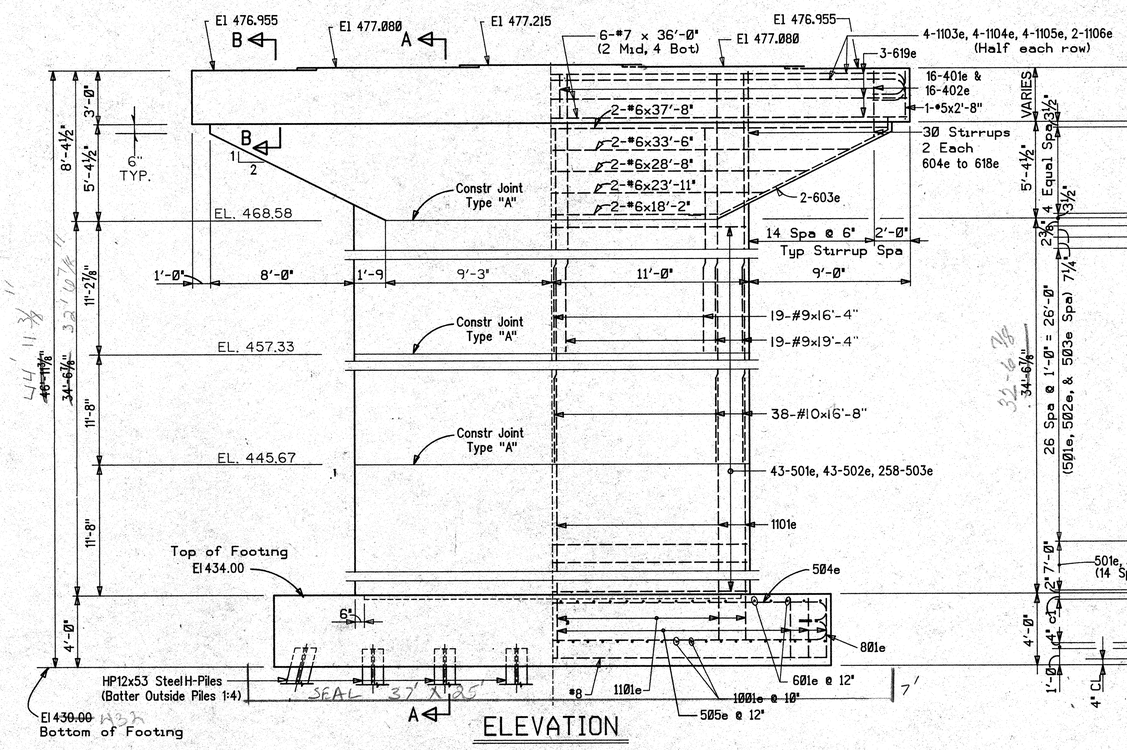

ELEVATION

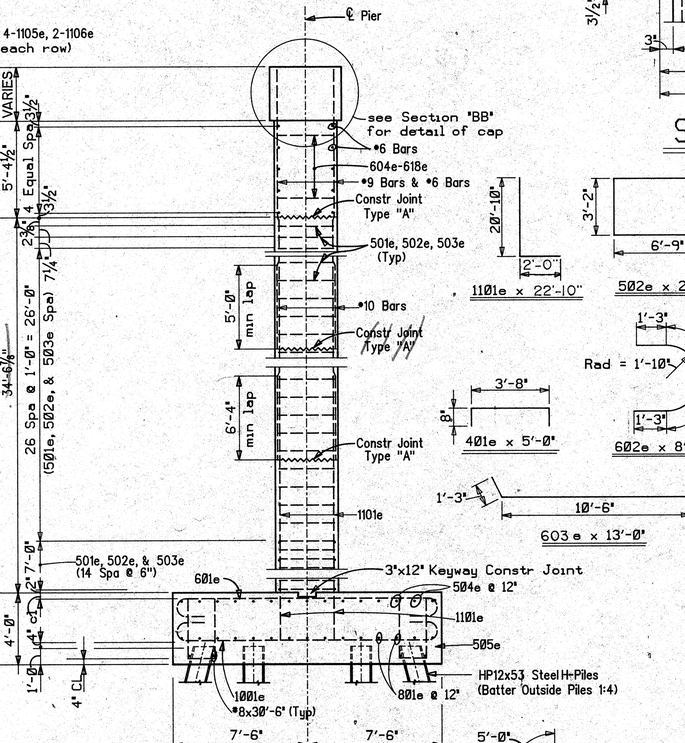

SECTION "AA"

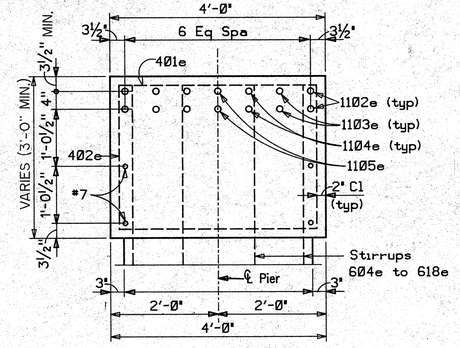

SECTION "BB"

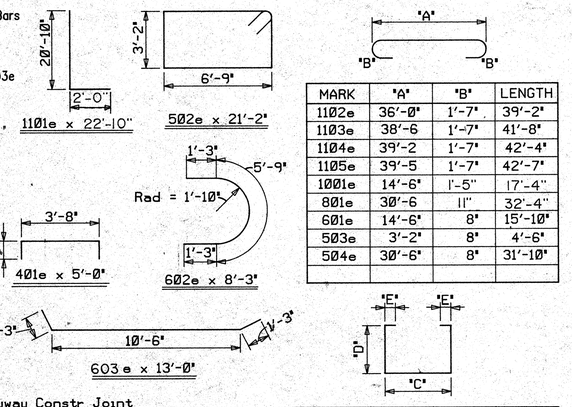

MARK	"A"	"B"	LENGTH
1102e	36'-0"	1'-7"	39'-2"
1103e	38'-6	1'-7"	41'-8"
1104e	39'-2	1'-7"	42'-4"
1105e	39'-5	1'-7"	42'-7"
1001e	14'-6"	1'-5"	17'-4"
801e	30'-6	11"	32'-4"
601e	14'-6"	8"	15'-10"
503e	3'-2"	8"	4'-6"
504e	30'-6"	8"	31'-10"

MARK	"C"	"D"	"E"	LENGTH
604e	2'-4"	3'-8"	1'-0"	11'-8"
605e	2'-4"	3'-11"	1'-0"	12'-2"
606e	2'-4"	4'-2"	1'-0"	12'-8"
607e	2'-4"	4'-5"	1'-0"	13'-2"
608e	2'-4"	4'-8"	1'-0"	13'-8"
609e	2'-4"	4'-11"	1'-0"	14'-2"
610e	2'-4"	5'-2"	1'-0"	14'-8"
611e	2'-4"	5'-5"	1'-0"	15'-2"
612e	2'-4"	5'-8"	1'-0"	15'-8"
613e	2'-4"	5'-11"	1'-0"	16'-2"
614e	2'-4"	6'-2"	1'-0"	16'-8"
615e	2'-4"	6'-5"	1'-0"	17'-2"
616e	2'-4"	6'-8"	1'-0"	17'-8"
617e	2'-4"	6'-11"	1'-0"	18'-2"
618e	2'-4"	7'-2"	1'-0"	18'-8"
505e	1'-6"	3'-4"	0"	8'-2"
402e	3'-8"	2'-8"	8"	10'-4"

Notes:
For Reinforcing Bar Notes, see Bridge Standard C1.
See Bottom Bearing Plate Detail for Anchor Bolt Spacing

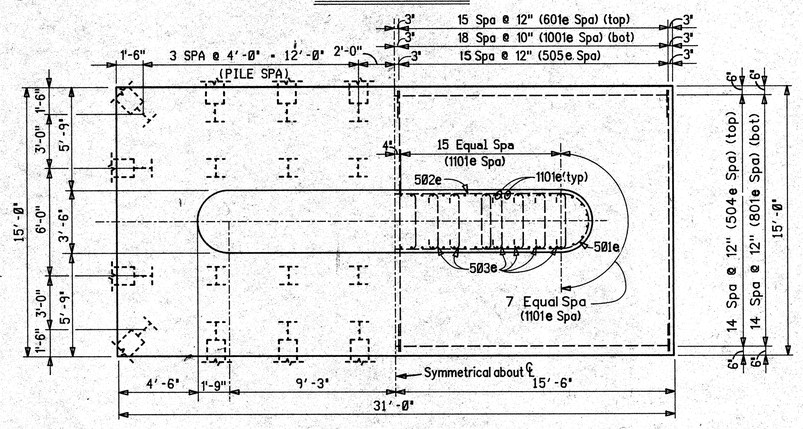

FOOTING PLAN

Left side shows concrete dimensions and pile spacing

Right side shows reinforcing steel

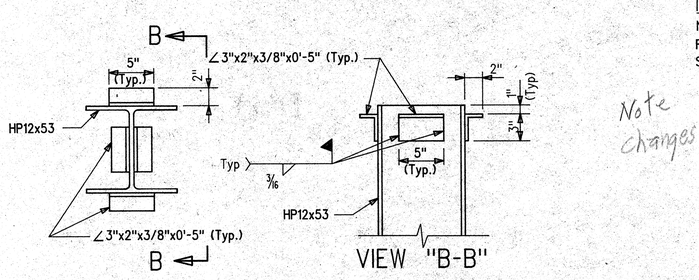

PILE ANCHORAGE DETAIL

Scale: 1/2" = 1"

Note: Cost of Pile Anchorage to be included in the cost of piling.

Note changes

BILL OF MATERIALS

REINFORCING STEEL			
SIZE OR MARK	NO OF BARS	LENGTH	WEIGHT (lbs)
1101e	76	22'-10"	
1102e	4	39'-2"	
1103e	4	41'-8"	
1104e	4	42'-4"	
1105e	2	42'-7"	
	Total No 11		12290
1001e	38	17'-4"	
*10	76	16'-8"	
	Total No 10		8285
*9	38	19'-4"	
*9	38	16'-4"	
	Total No 9		4608
801e	15	32'-4"	
*8	4	30'-6"	
	Total No 8		1621
*7	4	36'-0"	
	Total No 7		294
601e	32	15'-10"	
602e	6	8'-3"	
603e	4	13'-0"	
604e	4	11'-8"	
605e	4	12'-2"	
606e	4	12'-8"	
607e	4	13'-2"	
608e	4	13'-8"	
609e	4	14'-2"	
610e	4	14'-8"	
611e	4	15'-2"	
612e	4	15'-8"	
613e	4	16'-2"	
614e	4	16'-8"	
615e	4	17'-2"	
616e	4	17'-8"	
617e	4	18'-2"	
618e	4	18'-8"	
*6	2	37'-8"	
*6	2	33'-6"	
*6	2	28'-8"	
*6	2	23'-11"	
*6	2	18'-2"	
	Total No 6		2707
501e	86	17'-10"	
502e	86	21'-2"	
503e	516	4'-6"	
504e	15	31'-10"	
505e	68	8'-4"	
*5	2	2'-8"	
	Total No 5		6969
401e	32	5'-0"	
402e	32	10'-4"	
	Total No 4		328
Total Reinforcing Steel			37,102
Surface Seal			200 SFT
MISCELLANEOUS			
HP12x53 Steel H-Piles (32x16)			512 Lft
1"x15" Steel Anchor Bolts w/ Flat Washer and Hex-Nut			20 Ea.
CONCRETE			
Class "B" in Footing			68.9 CYS
Class "B" above Footing			95.2 CYS
Class "A"			38.5 CYS

89.7

CONCRETE FOUNDATION SEAL 22 CU YD

PIER No 4 WBL DETAILS

INDIANA DEPARTMENT OF TRANSPORTATION

VIGO COUNTY

SCALE:- 1/4" = 1'-0" Unless Noted DATE:- 19

DESIGNED HIZ/SAG C'K'D NKB
DRAWN MAH C'K'D NKB
TRACED ____ C'K'D ____

DRAWING: S9 OF 37 SHEET: 34 OF 92
PROJECT:- M-T610(1)
BRIDGE CONTRACT NO. B-18969
BRIDGE FILE:- 40-84-7279

HENRY C. RHEE REGISTERED NO. 13692 STATE OF INDIANA PROFESSIONAL ENGINEER

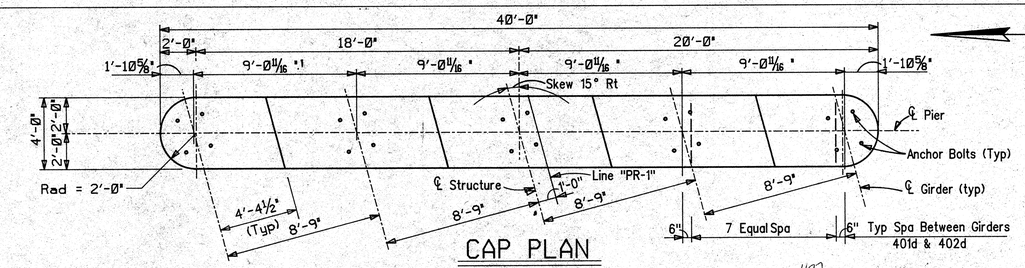

CAP PLAN

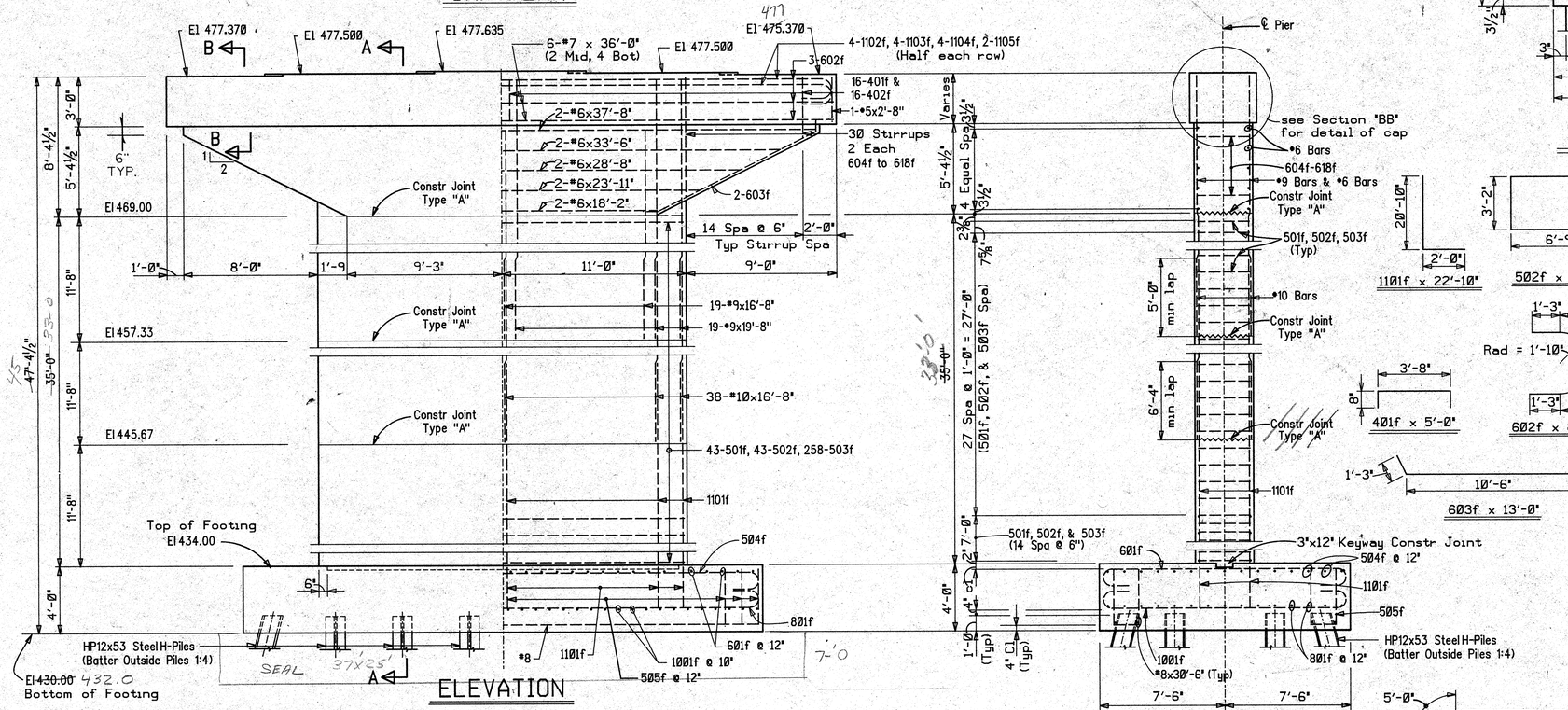

ELEVATION

SECTION "AA"

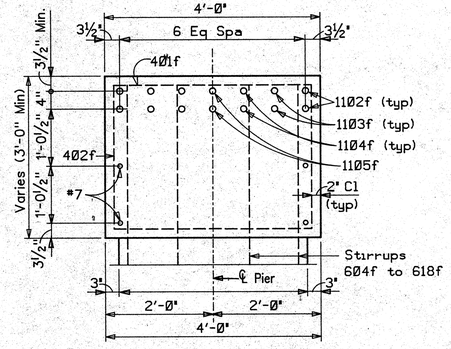

SECTION "BB"

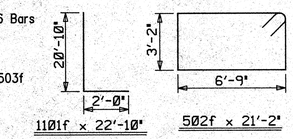

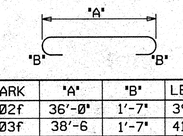

MARK	"A"	"B"	LENGTH
1102f	36'-0"	1'-7"	39'-2"
1103f	38'-6	1'-7"	41'-8"
1104f	39'-2	1'-7"	42'-4"
1105f	39'-5	1'-7"	42'-7"
1001f	14'-6"	1'-5"	17'-4"
801f	30'-6"	11"	32'-4"
601f	14-6"	8"	15'-10"
503f	3'-2"	8"	4'-6"
504f	30'-6"	8"	31'-10"

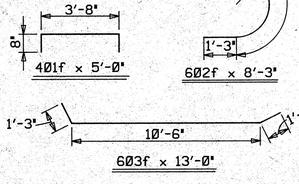

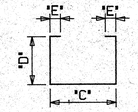

MARK	"C"	"D"	"E"	LENGTH
604f	2'-4"	3'-8"	1'-0"	11'-8"
605f	2'-4"	3'-11"	1'-0"	12'-2"
606f	2'-4"	4'-2"	1'-0"	12'-8"
607f	2'-4"	4'-5"	1'-0"	13'-2"
608f	2'-4"	4'-8"	1'-0"	13'-8"
609f	2'-4"	4'-11"	1'-0"	14'-2"
610f	2'-4"	5'-2"	1'-0"	14'-8"
611f	2'-4"	5'-5"	1'-0"	15'-2"
612f	2'-4"	5'-8"	1'-0"	15'-8"
613f	2'-4"	5'-11"	1'-0"	16'-2"
614f	2'-4"	6'-2"	1'-0"	16'-8"
615f	2'-4"	6'-5"	1'-0"	17'-2"
616f	2'-4"	6'-8"	1'-0"	17'-8"
617f	2'-4"	6'-11"	1'-0"	18'-2"
618f	2'-4"	7'-2"	1'-0"	18'-8"
505f	1'-6"	3'-4"	Ø"	8'-2"
402f	3'-8"	2'-8"	8"	10'-4"

Notes:
For Reinforcing Bar Notes, see Bridge Standard C1.
See Bottom Bearing Plate Detail for Anchor Bolt Spacing

BILL OF MATERIALS

REINFORCING STEEL			
SIZE OR MARK	NO OF BARS	LENGTH	WEIGHT (lbs)
1101f	76	22'-10"	
1102f	4	39'-2"	
1103f	4	41'-8"	
1104f	4	42'-4"	
1105f	2	42'-7"	
	Total No 11		12290
1001f	38	17'-4"	
#10	76	16'-8"	
	Total No 10		8285
#9	38	19'-8"	
#9	38	16'-8"	
	Total No 9		4694
801f	15	32'-4"	
#8	4	30'-6"	
	Total No 8		1621
#7	4	36'-0"	
	Total No 7		294
601f	32	15'-10"	
602f	6	8'-3"	
603f	4	13'-0"	
604f	4	11'-8"	
605f	4	12'-2"	
606f	4	12'-8"	
607f	4	13'-2"	
608f	4	13'-8"	
609f	4	14'-2"	
610f	4	14'-8"	
611f	4	15'-2"	
612f	4	15'-8"	
613f	4	16'-2"	
614f	4	16'-8"	
615f	4	17'-2"	
616f	4	17'-8"	
617f	4	18'-2"	
618f	4	18'-8"	
#6	2	37'-8"	
#6	2	33'-6"	
#6	2	28'-8"	
#6	2	23'-11"	
#6	2	18'-2"	
	Total No 6		2707
501f	86	17'-10"	
502f	86	21'-2"	
503f	516	4'-6"	
504f	15	31'-10"	
505f	64	8'-2"	
#5	2	2'-8"	
	Total No 5		6969
401f	32	5'-0"	
402f	32	10'-4"	
	Total No 4		328
Total Reinforcing Steel			37,188
Surface Seal			200 SFT
MISCELLANEOUS			
HP12x53 Steel H-Piles (32x16)			512 Lft
1"x15" Steel Anchor Bolts w/ Flat Washer & Hex-Nut			20 Ea.
CONCRETE			
Class "B" in Footing			68.9 CYS
Class "B" above Footing			~~96.4 CYS~~ 90.9
Class "A"			38.6 CYS

CONCRETE FOUNDATION SEALS 224.6 CYS

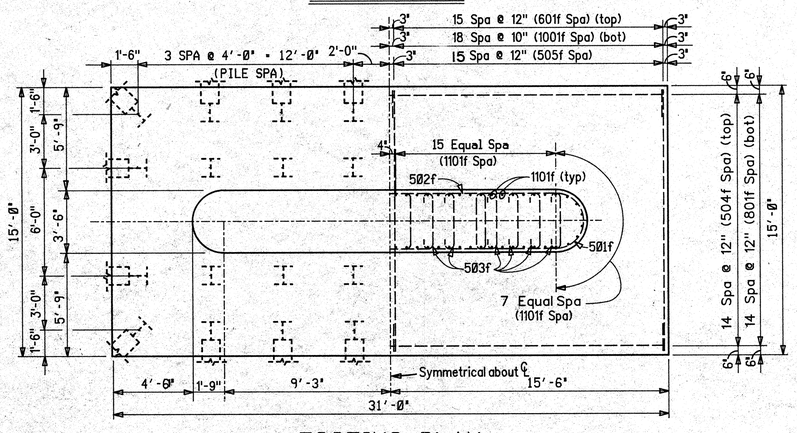

FOOTING PLAN

Left side shows concrete dimensions and pile spacing

Right side shows reinforcing steel

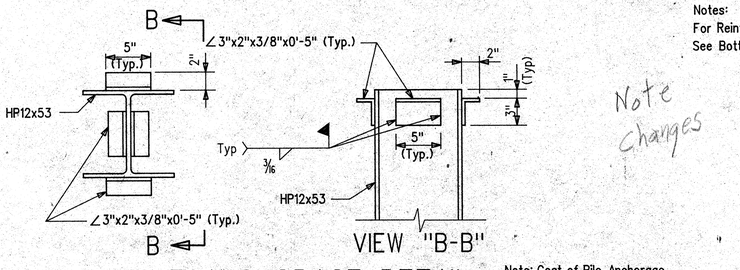

PILE ANCHORAGE DETAIL

Scale: ½" = 1"

Note: Cost of Pile Anchorage to be included in the cost of piling.

Note changes

PIER No 5 WBL DETAILS

INDIANA DEPARTMENT OF TRANSPORTATION

VIGO COUNTY

SCALE:- ¼" = 1'-0" Unless Noted DATE:- 19

DESIGNED WJSAG C'K'D NEB
DRAWN MAH C'K'D NEB
TRACED C'K'D

DRAWING: S10 OF 37 SHEET: 35 OF 92
PROJECT:- M-T610(1)
BRIDGE CONTRACT NO. B-18969
BRIDGE FILE:- 40-84-7279

HENRY C. RHEE — No. 13692 — STATE OF INDIANA — PROFESSIONAL ENGINEER

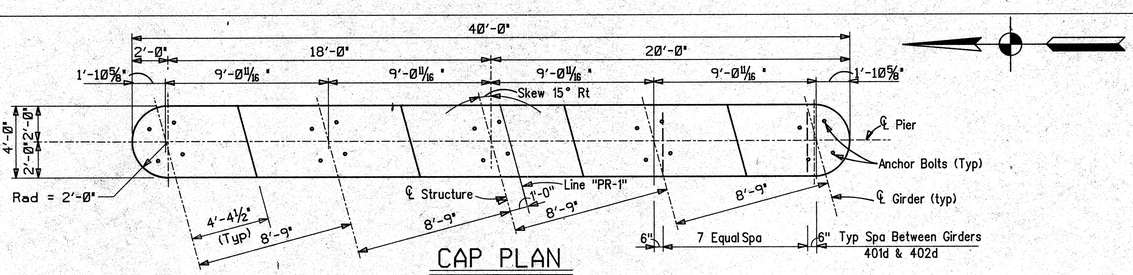

CAP PLAN

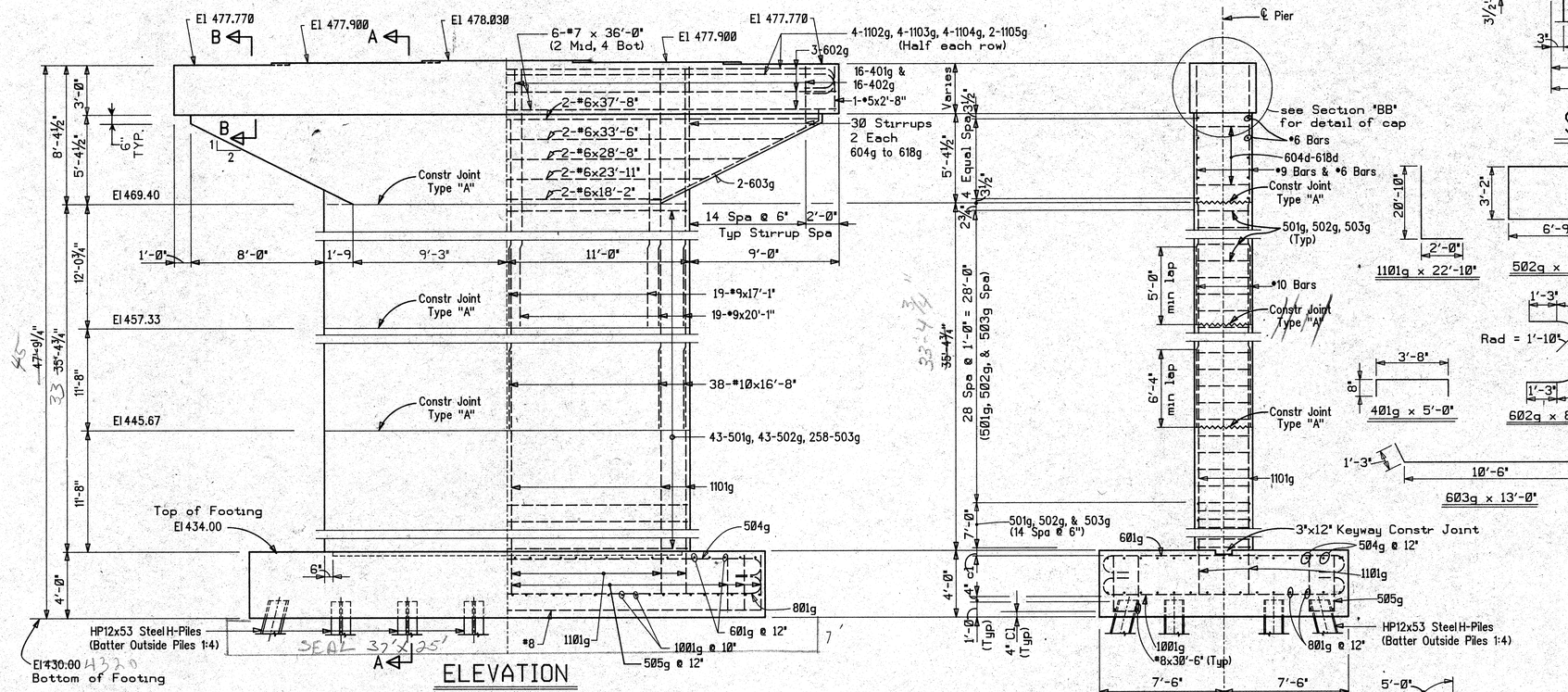

ELEVATION

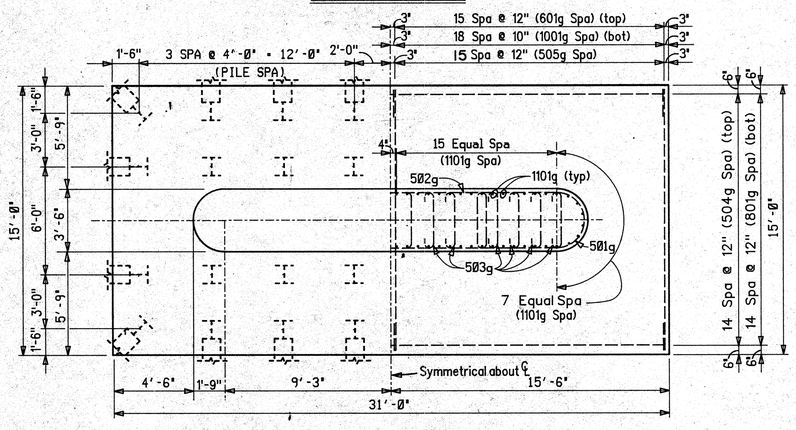

FOOTING PLAN

Left side shows concrete dimensions and pile spacing

Right side shows reinforcing steel

SECTION "AA"

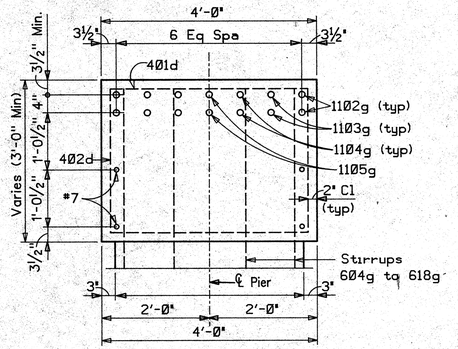

SECTION "BB"

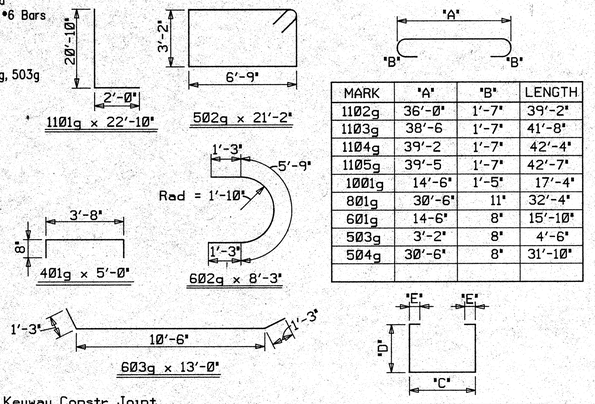

MARK	"A"	"B"	LENGTH
1102g	36'-0"	1'-7"	39'-2"
1103g	38'-6	1'-7"	41'-8"
1104g	39'-2	1'-7"	42'-4"
1105g	39'-5	1'-7"	42'-7"
1001g	14'-6"	1'-5"	17'-4"
801g	30'-6"	11"	32'-4"
601g	14-6"	8"	15'-10"
503g	3'-2"	8"	4'-6"
504g	30'-6"	8"	31'-10"

MARK	"C"	"D"	"E"	LENGTH
604g	2'-4"	3'-8"	1'-0"	11'-8"
605g	2'-4"	3'-11"	1'-0"	12'-2"
606g	2'-4"	4'-2"	1'-0"	12'-8"
607g	2'-4"	4'-5"	1'-0"	13'-2"
608g	2'-4"	4'-8"	1'-0"	13'-8"
609g	2'-4"	4'-11"	1'-0"	14'-2"
610g	2'-4"	5'-2"	1'-0"	14'-8"
611g	2'-4"	5'-5"	1'-0"	15'-2"
612g	2'-4"	5'-8"	1'-0"	15'-8"
613g	2'-4"	5'-11"	1'-0"	16'-2"
614g	2'-4"	6'-2"	1'-0"	16'-8"
615g	2'-4"	6'-5"	1'-0"	17'-2"
616g	2'-4"	6'-8"	1'-0"	17'-8"
617g	2'-4"	6'-11"	1'-0"	18'-2"
618g	2'-4"	7'-2"	1'-0"	18'-8"
505g	1'-6"	3'-4"	0"	8'-2"
402g	3'-8"	2'-8"	8"	10'-4"

Notes:
For Reinforcing Bar Notes, see Bridge Standard C1.
See Bottom Bearing Plate Detail for Anchor Bolt Spacing

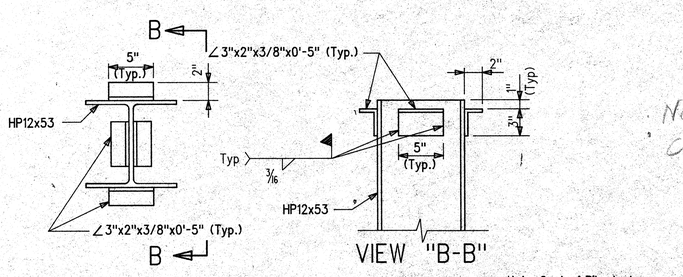

PILE ANCHORAGE DETAIL

Scale: 1/2" = 1"

Note: Cost of Pile Anchorage to be included in the cost of piling.

BILL OF MATERIALS

REINFORCING STEEL			
SIZE OR MARK	NO OF BARS	LENGTH	WEIGHT (lbs)
1101g	76	22'-10"	
1102g	4	39'-2"	
1103g	4	41'-8"	
1104g	4	42'-4"	
1105g	2	42'-7"	
	Total	No 11	12290
1001g	38	17'-4"	
#10	76	16'-8"	
	Total	No 10	8285
#9	38	20'-1"	
#9	38	17'-1"	
	Total	No 9	4802
801g	15	32'-4"	
#8	4	30'-6"	
	Total	No 8	1621
#7	4	36'-0"	
	Total	No 7	294
601g	32	15'-10"	
602g	6	8'-3"	
603g	4	13'-0"	
604g	4	11'-8"	
605g	4	12'-2"	
606g	4	12'-8"	
607g	4	13'-2"	
608g	4	13'-8"	
609g	4	14'-2"	
610g	4	14'-8"	
611g	4	15'-2"	
612g	4	15'-8"	
613g	4	16'-2"	
614g	4	16'-8"	
615g	4	17'-2"	
616g	4	17'-8"	
617g	4	18'-2"	
618g	4	18'-8"	
#6	2	37'-8"	
#6	2	33'-6"	
#6	2	28'-8"	
#6	2	23'-11"	
#6	2	18'-2"	
	Total	No 6	2707
501g	86	17'-10"	
502g	86	21'-2"	
503g	516	4'-6"	
504g	15	31'-10"	
505g	64	8'-2"	
#5	2	2'-8"	
	Total	No 5	6969
401g	32	5'-0"	
402g	32	10'-4"	
	Total	No 4	328
Total Reinforcing Steel			37,296
Surface Seal			200 SFT
MISCELLANEOUS			
HP12x53 Steel H-Piles (32x16)			512 Lft
1"x15" Steel Anchor Bolts w/ Flat Washer & Hex-Nut			20 Ea.
CONCRETE			
Class "B" in Footing			68.9 CYS
Class "B" above Footing			~~97.5~~ CYS
Class "A"			38.6 CYS

92.0

CONCRETE FOUNDATION FRMS 22+0 24.0

Note changes

PIER No 6 WBL DETAILS

INDIANA DEPARTMENT OF TRANSPORTATION

VIGO COUNTY

SCALE:- 1/4" = 1'-0" Unless Noted DATE:- 19

DESIGNED HJ/SRG C'K'D NKB
DRAWN MAH C'K'D NKB
TRACED ____ C'K'D ____

DRAWING:- S11 OF 37 SHEET:- 36 OF 92
PROJECT:- M-T610(1)
BRIDGE CONTRACT NO. B-18969
BRIDGE FILE:- 40-84-7279

HENRY C. RHEE REGISTERED No. 13692 STATE OF INDIANA PROFESSIONAL ENGINEER

16015

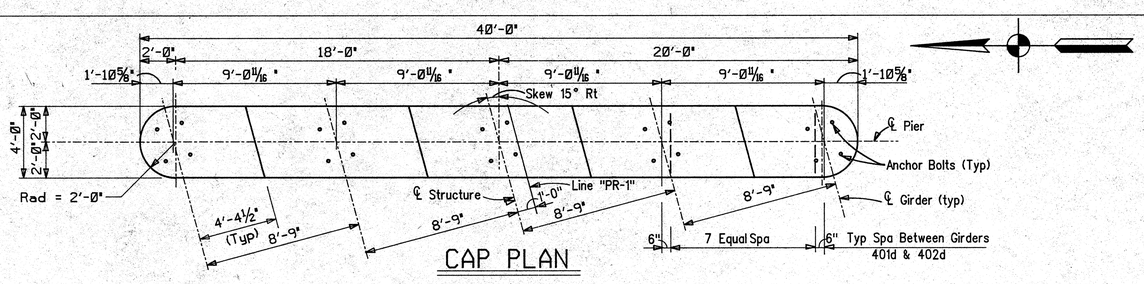

CAP PLAN

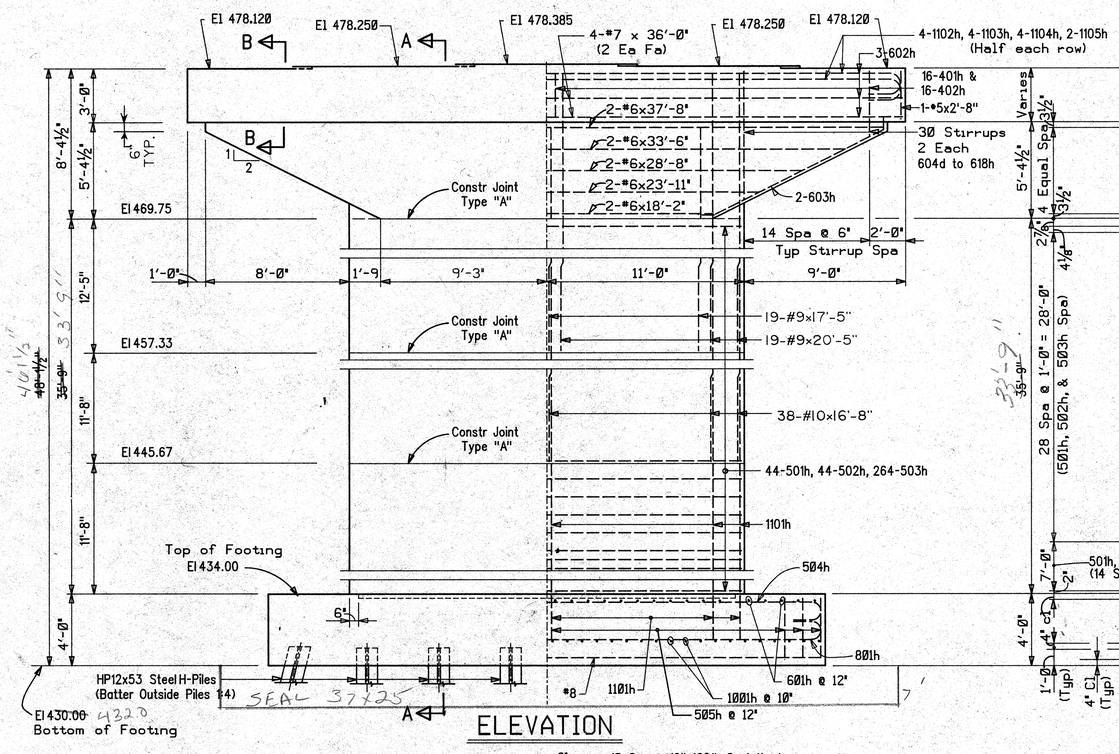

ELEVATION

SECTION "AA"

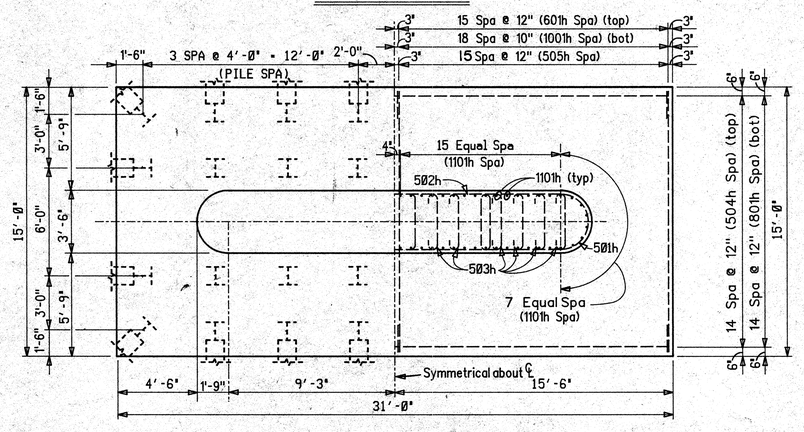

FOOTING PLAN

Left side shows concrete dimensions and pile spacing

Right side shows reinforcing steel

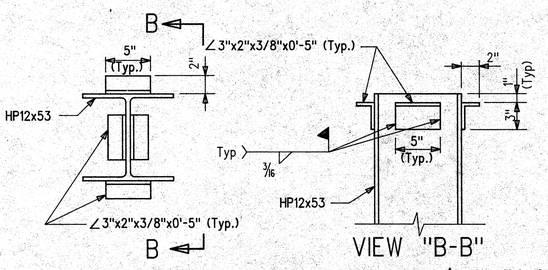

VIEW "B-B"

PILE ANCHORAGE DETAIL

Scale: 1/2" = 1"

Note: Cost of Pile Anchorage to be included in the cost of piling.

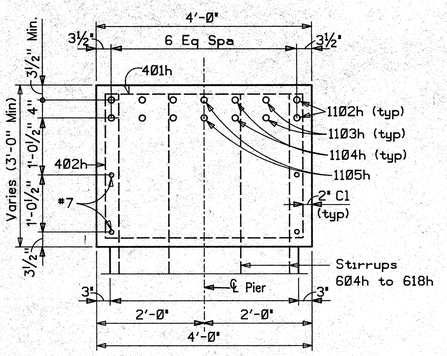

SECTION "BB"

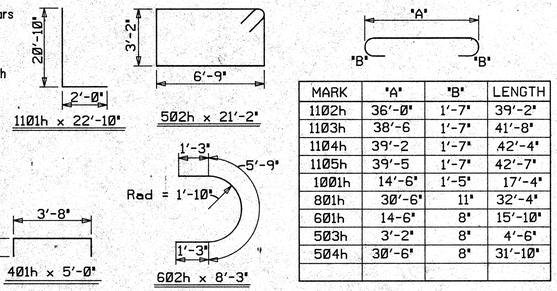

MARK	"A"	"B"	LENGTH
1102h	36'-0"	1'-7"	39'-2"
1103h	38'-6	1'-7"	41'-8"
1104h	39'-2	1'-7"	42'-4"
1105h	39'-5	1'-7"	42'-7"
1001h	14'-6"	1'-5"	17'-4"
801h	30'-6"	11"	32'-4"
601h	14-6"	8"	15'-10"
503h	3'-2"	8"	4'-6"
504h	30'-6"	8"	31'-10"

MARK	"C"	"D"	"E"	LENGTH
604h	2'-4"	3'-8"	1'-0"	11'-8"
605h	2'-4"	3'-11"	1'-0"	12'-2"
606h	2'-4"	4'-2"	1'-0"	12'-8"
607h	2'-4"	4'-5"	1'-0"	13'-2"
608h	2'-4"	4'-8"	1'-0"	13'-8"
609h	2'-4"	4'-11"	1'-0"	14'-2"
610h	2'-4"	5'-2"	1'-0"	14'-8"
611h	2'-4"	5'-5"	1'-0"	15'-2"
612h	2'-4"	5'-8"	1'-0"	15'-8"
613h	2'-4"	5'-11"	1'-0"	16'-2"
614h	2'-4"	6'-2"	1'-0"	16'-8"
615h	2'-4"	6'-5"	1'-0"	17'-2"
616h	2'-4"	6'-8"	1'-0"	17'-8"
617h	2'-4"	6'-11"	1'-0"	18'-2"
618h	2'-4"	7'-2"	1'-0"	18'-8"
505h	1'-6"	3'-4"	0"	8'-2"
402h	3'-8"	2'-8"	8"	10'-4"

Notes:
For Reinforcing Bar Notes, see Bridge Standard C1.
See Bottom Bearing Plate Detail for Anchor Bolt Spacing

BILL OF MATERIALS

REINFORCING STEEL			
SIZE OR MARK	NO OF BARS	LENGTH	WEIGHT (lbs)
1101h	76	22'-10"	
1102h	4	39'-2"	
1103h	4	41'-8"	
1104h	4	42'-4"	
1105h	2	42'-7"	
	Total No 11		#12290
1001h	38	17'-4"	
*10	76	16'-8"	
	Total No 10		8285
*9	38	20'-5"	
*9	38	17'-5"	
	Total No 9		4888
801h	15	32'-4"	
*8	4	30'-6"	
	Total No 8		1621
*7	4	36'-0"	
	Total No 7		294
601h	32	15'-10"	
602h	6	8'-3"	
603h	4	13'-0"	
604h	4	11'-8"	
605h	4	12'-2"	
606h	4	12'-8"	
607h	4	13'-2"	
608h	4	13'-8"	
609h	4	14'-2"	
610h	4	14'-8"	
611h	4	15'-2"	
612h	4	15'-8"	
613h	4	16'-2"	
614h	4	16'-8"	
615h	4	17'-2"	
616h	4	17'-8"	
617h	4	18'-2"	
618h	4	18'-8"	
*6	2	37'-8"	
*6	2	33'-6"	
*6	2	28'-8"	
*6	2	23'-11"	
*6	2	18'-2"	
	Total No 6		2707
501h	88	17'-10"	
502h	88	21'-2"	
503h	528	4'-6"	
504h	15	31'-10"	
505h	64	8'-2"	
*5	2	2'-8"	
	Total No 5		7106
401h	32	5'-0"	
402d	32	10'-4"	
	Total No 4		328
Total Reinforcing Steel			37,519
Surface Seal			200 SFT
MISCELLANEOUS			
HP12x53 Steel H-Piles (32x16)*			512 Lft
1"x15" Steel Anchor Bolts w/ Flat Washer & Hex-Nut			20 Ea.
CONCRETE			
Class "B" in Footing			68.9 CYS
Class "B" above Footing			~~98.5 CYS~~ 93.0
Class "A"			38.6 CYS

CONCRETE FOUNDATION SEAL 2246 CYD

PIER No 7 WBL DETAILS

INDIANA DEPARTMENT OF TRANSPORTATION

VIGO COUNTY

SCALE:- 1/4" = 1'-0" Unless Noted

DATE:- 19

DESIGNED WZ/SAG C'K'D NKB
DRAWN MAH C'K'D NKB
TRACED ____ C'K'D ____

DRAWING:- S12 OF 37 SHEET:- 37 OF 92
PROJECT:- M-T610(1)
BRIDGE CONTRACT NO. B-18969
BRIDGE FILE:- 40-84-7279

HENRY C. RHEE — REGISTERED — No. 13692 — STATE OF INDIANA — PROFESSIONAL ENGINEER

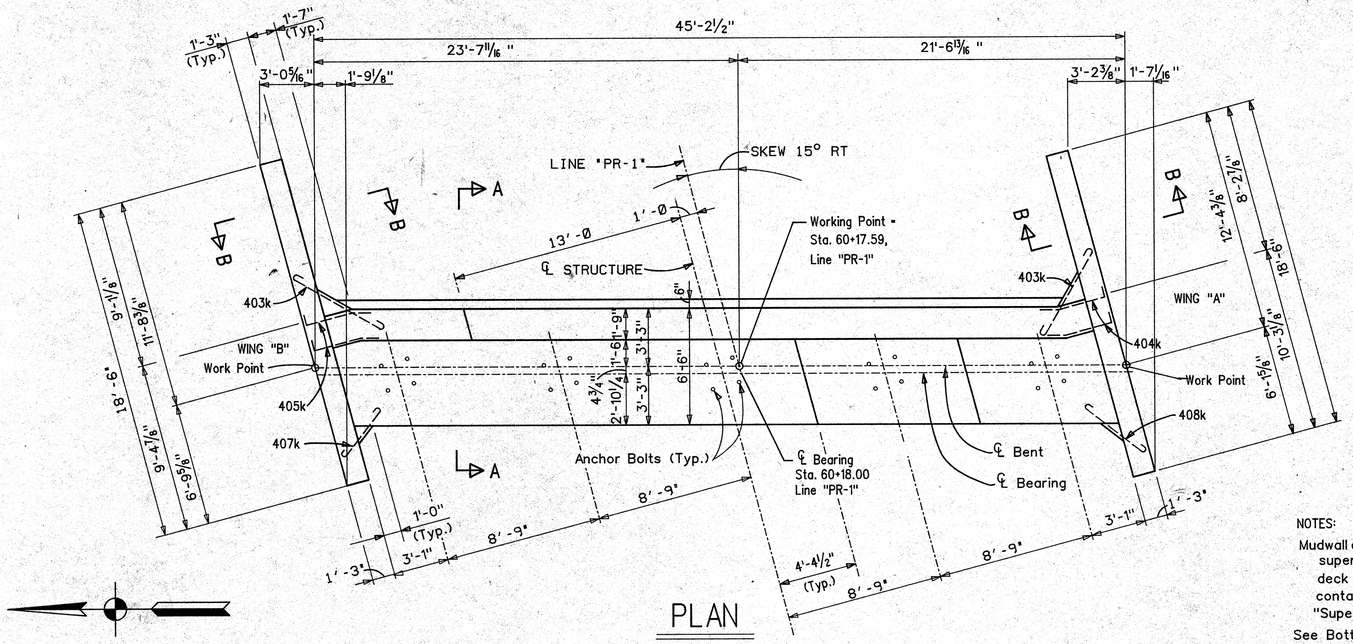

PLAN

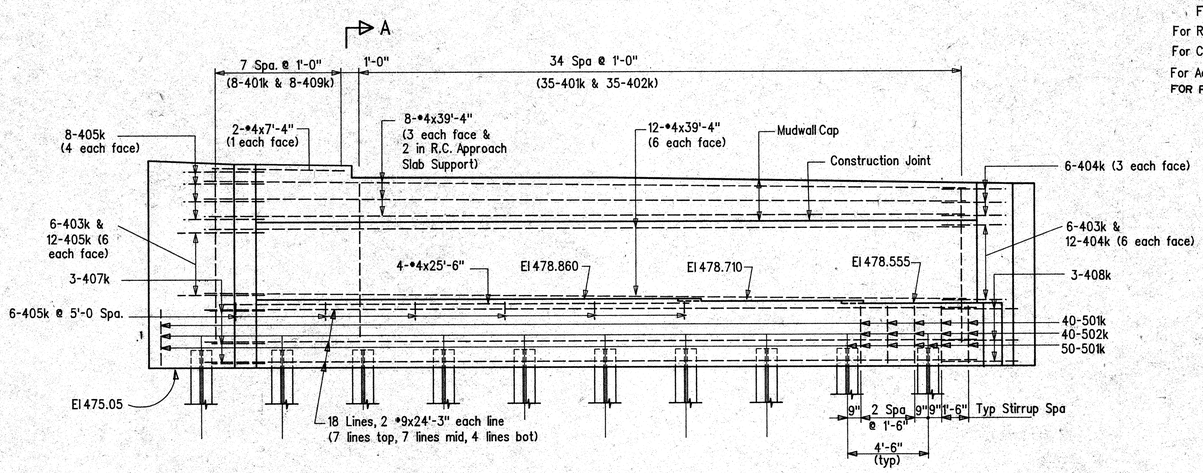

ELEVATION

NOTES:

Mudwall cap to be constructed with superstructure and to match bridge deck surface elevation. Quantities contained within cap included in "Superstructure Quantities".

See Bottom Bearing Plate Detail For Anchor Bolt Spacing **(Dwg. S35)**

For Reinforcing Bar Notes, see Bridge Standard C1

For Constr Joint Type "A", see Bridge Standard C3

For Additional Details and Bill of Materials, see Dwg. S14

FOR PILE ANCHORAGE DETAILS SEE DRAWING S12.

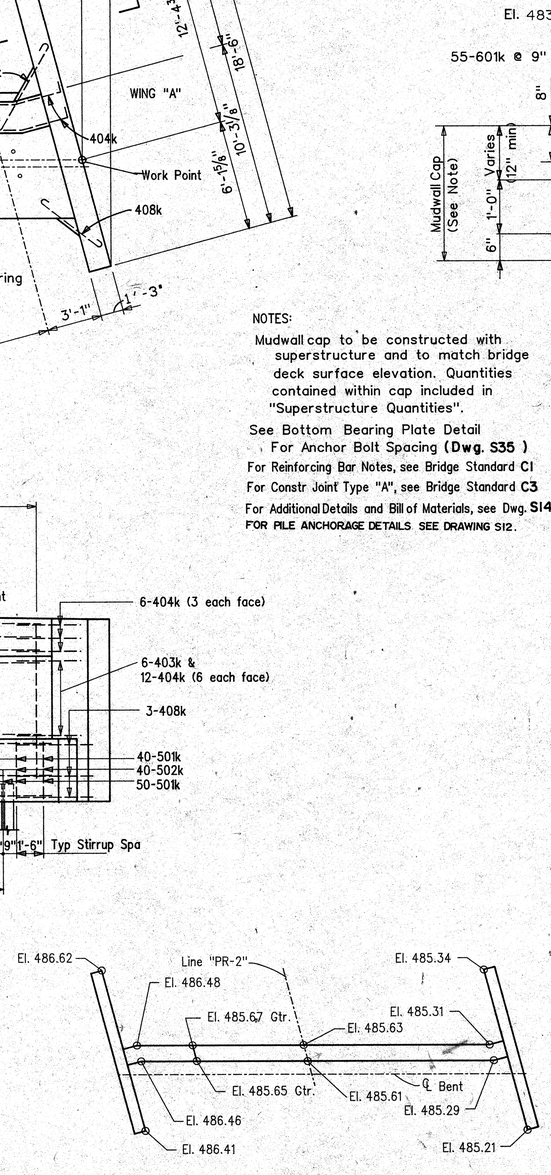

END BENT No. 8 WBL ELEVATIONS DIAGRAM

Scale: ⅛" = 1'-0"

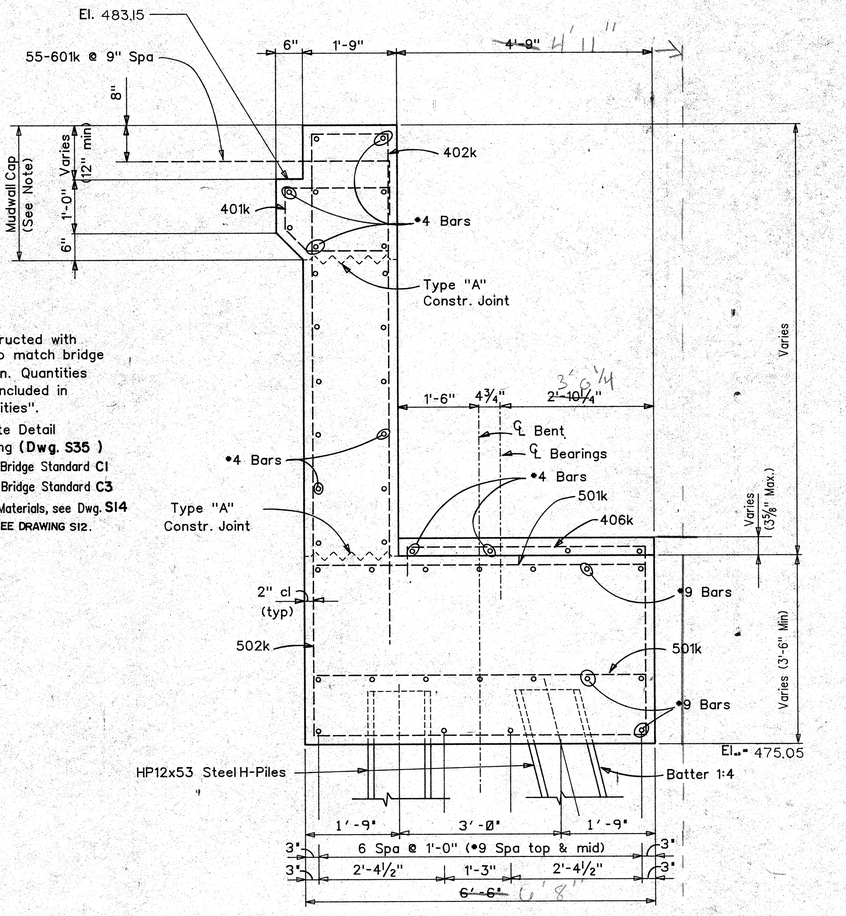

SECTION "A-A"

Scale: ¾" = 1'-0"

END BENT No 8 WBL DETAILS

INDIANA DEPARTMENT OF TRANSPORTATION

VIGO COUNTY

SCALE:- ¼" = 1'-0" Unless Noted DATE:- 19

DESIGNED WLDGP C'K'D NKB
DRAWN MAH C'K'D NKB
TRACED C'K'D

DRAWING:- **S13** OF **37** SHEET:- **38** OF 92
PROJECT:- **M-T610(1)**
BRIDGE CONTRACT NO. *B-18969*
BRIDGE FILE:- 40-84-7279

HENRY C. RHEE REGISTERED No. 13092 STATE OF INDIANA PROFESSIONAL ENGINEER

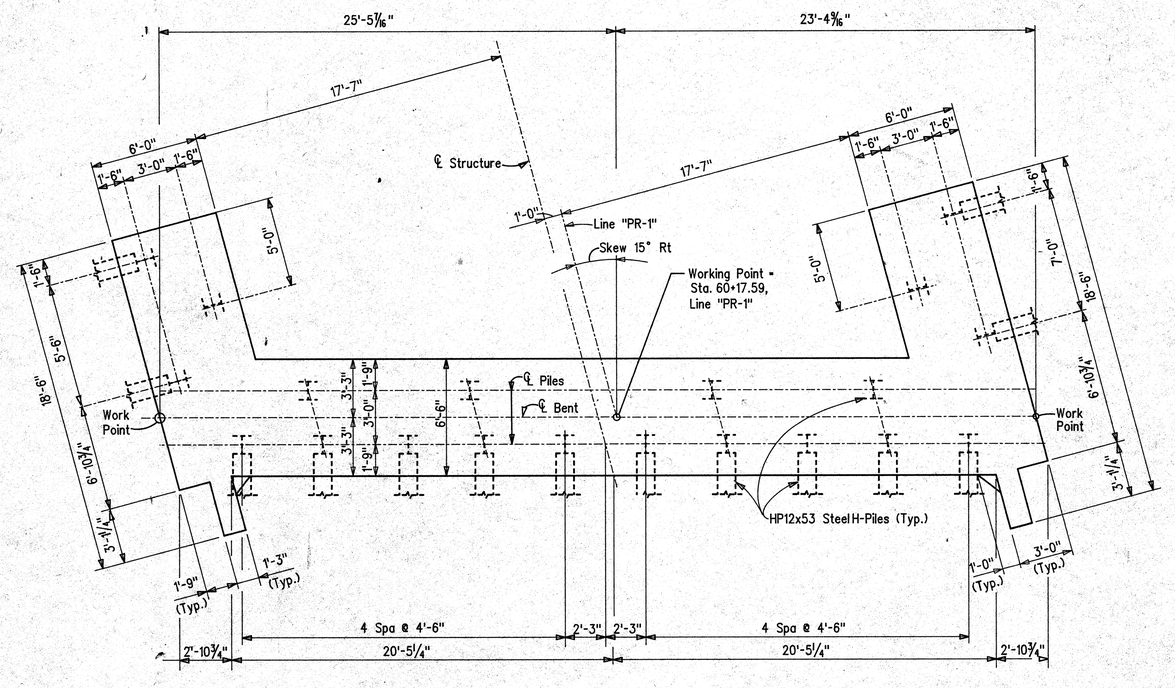

FOOTING PLAN

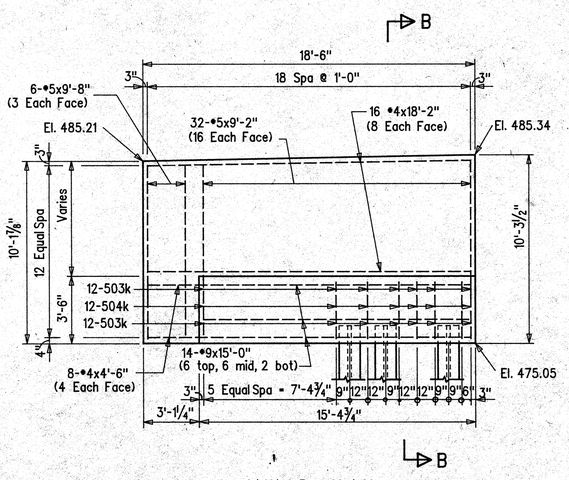

WING "A"

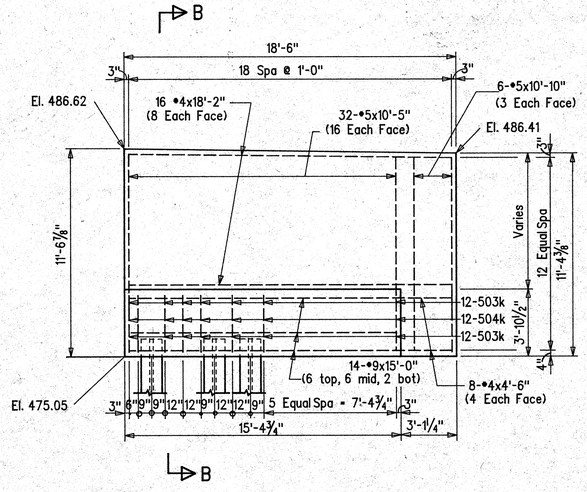

WING "B"

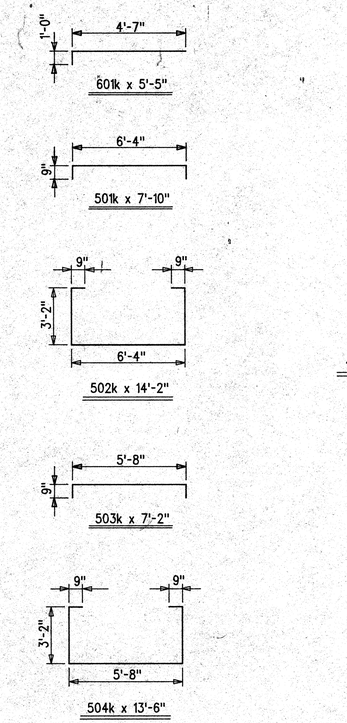

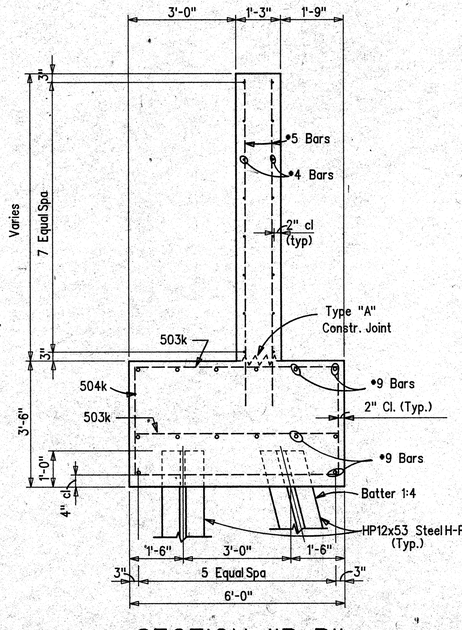

SECTION "B-B"

Scale: 1/2" = 1'-0"

BILL OF MATERIALS

REINFORCING STEEL			
SIZE OR MARK	NO OF BARS	LENGTH	WEIGHT (lbs)
•9	28	15'-0"	
•9	36	24'-3"	
	Total No 9		4396
501k	90	7'-10"	
502k	40	14'-2"	
503k	48	7'-2"	
504k	24	13'-6"	
•5	32	10'-5"	
•5	32	9'-2"	
•5	6	10'-10"	
•5	6	9'-8"	
	Total No 5		2805
402k	35	20'-5"	
403k	12	6'-0"	
404k	18	4'-3"	
405k	20	4'-3"	
406k	6	5'-7"	
407k	3	4'-4"	
408k	3	5'-2"	
409k	8	22'-1"	
•4	12	39'-4"	
•4	36	18'-2"	
•4	16	4'-6"	
•4	4	25'-6"	
•4	2	7'-4"	
	Total No 4		1671
Total Epoxy Coated Reinf Steel			8,872
CONCRETE			
Class "A"			83.0 Cys
MISCELLANEOUS			
Surface Seal (Estimated Quantity)			600 Sft
HP12x53 Steel H-Piles (20x47.1)			942 Lft
1"x15" Steel Anchor Bolts w/ Flat Washers and Hex-Nuts			20 Each

NOTES:
For Reinforcing Bar Notes, see Bridge Standard C1
For Constr Joint Type "A", see Bridge Standard C3
For Additional Details, see Dwg. S13

END BENT No 8 WBL DETAILS

INDIANA DEPARTMENT OF TRANSPORTATION
VIGO COUNTY

SCALE:- 1/4" = 1'-0" Unless Noted DATE:- 19

DESIGNED WZ/DGP C'K'D JKB
DRAWN MAH C'K'D JKB
TRACED C'K'D

DRAWING:- S14 OF 37 SHEET:- 39 OF 92
PROJECT:- M-T610(1)
BRIDGE CONTRACT NO. B-18969
BRIDGE FILE:- 40-84-7279

HENRY C. RHEE REGISTERED No. 13692 STATE OF INDIANA PROFESSIONAL ENGINEER

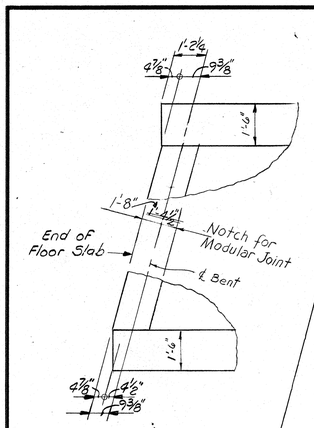

CORNER DETAILS
Scale ⅜" = 1'-0"

883'-0 O. to O. Floor Slab

105'-0" C. to C. | 130'-0 C. to C. | 130'-0" C to C. | 150'-0" C to C.

55 60lb @ Bent No. 1
55 60lk @ Bent No. 8
(SEE BENT DETAIL SHEETS S5 & S13)

℄ Bent No. 1 or No. 8 Bearing
℄ Pier No. 2 or No. 7
℄ Pier No. 3 or No. 6
℄ Pier No. 4 or No. 5

28'-3 | 30'-3 | 28'-2 | 28'-10 | 36'-8 | 30'-7

Coping
Face of Railing
8-502a Spa @ 1' Between Gurders
880-501a (Top Sidewalk)
8 Lines, 23-#5 x 39'-11" Ea. Line, (Top of Sidewalk) 1'-5" ~~1'-10"~~ Min. Lap
1'-6
6'-0

Modular Exp. Joint
3-#5x7'-6" Between Girders
Edge of Sidewalk

32 Lines, 2-#5 x 39'-6" Ea. Line (Top Slab) ~~1'-10"~~ Min. Lap 1'-5"
32 Lines, 2-#5x39'-1" Ea. Line (Top Slab) ~~1'-10"~~ Min. Lap 1'-5"
32 Lines, 2-#5 x 35'-0" Ea. Line (Top Slab) ~~1'-10"~~ Min. Lap 1'-5"
32 Lines, 3-#5x32'-5" Ea. Line (Top Slab), ~~1'-10"~~ Min. Laps 1'-5"

Constr. ℄ Line PR-1

32 Lines, 2-#6 x 30'-2" Ea. Line (Top Slab) 1'-10 Min. Lap @ Piers No. 2 & 7
32 Lines, 2-#6x29'-5" Ea. Line (Top Slab) 1'-10 Min. Lap @ Piers No. 3 & 6
32 Lines, 2-#6x34'-7" Ea. Line (Top Slab) 1'-10 Min. Lap @ Piers No. 4 & 5

44 Spa. @ 1'-0" (Max.) = 42'-5⅜" (Measured On Skew)
54 Spa. @ 9" = 40'-6"

1760 Lines, 2-#6 x 22'-6" Each Line (Top & Bot. Slab) 1'-10" Min Lap

60-" Lines, 23-#5 39'-11" Ea. Line (Bot. Slab) ~~1'-10"~~ Min Lap. 1'-5
33 Lines, 23-#5 39'-11" Ea. Line (Top Slab) ~~1'-10"~~ Min. Lap.

32'-0 Clear Roadway
41'-0 O. to O Coping

Symm. about ℄ Structure

B

Face of Railing
Roadway Drain Type "SQ-A", (Typ.)
For Spacing SEE DWG. S3
For Details SEE DWG. S36

43 40lb @ Bent No. 1
43 40lk @ Bent No. 8
SEE DETAIL SHEETS S5 & S13

3" (Typ.)

Coping

B

Notes:
See Bridge Std. C1 for Reinforcing Bar Notes.
See Bridge Std. C3 for Constr. Jt. Type "A".

For Bill of Materials, see Dwg. S36.
See Bridge Std. D for Roadway Drain Details.
The top reinforcing in the deck shall be securely tied down to the deck forms and/or the girders to prevent lifting during concrete placement.
Permanent metal deck forms may be substituted for removable forms on this structure.
After structural steel has been erected, concrete forms shall not be blocked against the expansion end of steel in making any pours adjacent to the steel spans.
All reinforcing steel in the bridge slab to be epoxy coated. Areas of coating damaged during fabrication or handling in field shall be repaired with material compatible with coating applied by the manufacturer.

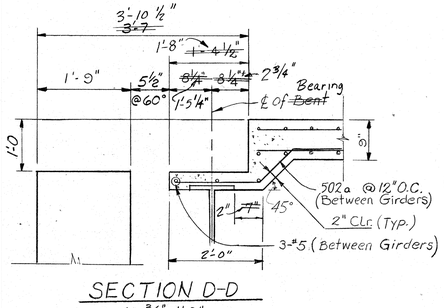

SECTION D-D
Scale ~~¾" = 1'-0"~~ Not to Scale

PLAN
Scale: 1/16" = 1'-0 Horizontal
3/16" = 1'-0 Vertical

Masonry Coating Limits (Typ.)
Surface Seal Limits (Typ.)
Special Pedestrian Concrete Barrier Railing

41'-0 O. to O Coping
32'-0 Clear Roadway
1'-6 | 6'-0 | 12'-0 Lane | Line "PR-1" | 12'-0 Lane | 2'-0 | 6'-0 | 1'-6

Spa. #5 in ~~bot.~~ Top Slab
Spa. #5 in top Slab
7 Spa. @ 1'-3" = 8'-9"
7½" 6 Spa. @ 1'-3" = 7'-6" 7½"
Spa. #5 in ~~bot.~~ Top Slab
Spa. #6 in top Slab

Roadway Drainage Type SQ-A (Typ.)
Profile Grade
℄ Structure
1'-0
2¼" Cl
** Slope 3/16"/Ft.
2" Clr. (Typ.)
Slope ⅛"/Ft.
5" | 3'-6 | 2'-7 | 4" | 2" | 8" 1/16"
#5 @ 12" O.C.
501a @ 12" O.C.

Concrete Barrier Railing
¾" Half Round Drip Bead (Typ.)
6" (Typ.)
9" Slab
1" Clr.
#6 x 22'-6"
12 Spa. @ 7½" = 7'-6"
12 Spa. @ 7½" = 7'-6"
#6 x 22'-6"
Type "A" Constr. Joint
2" Clr. (Typ.)
3 Spa @ 7½" = 1'-10½" (Typ.)
11½"
3'-0
3'-0
4 Spa. @ 8'-9 = 35'-0

TYP. BETWEEN PIERS
TYP. AT PIERS

SECTION B-B
Scale: 3/8" = 1'-0

"Coping Jacks will not be allowed on these structures"

FLOOR DETAILS WBL

INDIANA DEPARTMENT OF ~~HIGHWAYS~~ TRANSPORTATION
VIGO COUNTY

SCALE:—AS NOTED DATE:- 19

DRAWING:- S15 OF 37 SHEET:- 40 OF 92
PROJECT:- M-T610(1) STATION:—64+58
BRIDGE CONTRACT NO. B-18969
BRIDGE FILE:- 40-84-7279

DESIGNED DGP C'K'D J.G
DRAWN RWA C'K'D J.G
TRACED ____ C'K'D ____

SF-22317

** Slope Varies in Spans A, B, and C (See Superelevation Diagrams, Sht. No. 5 and 6)

Revised 8-23-91: Min. Lap, Sec. B-B & D-D, Corner Detail

HENRY C. RHEE — No. 13612 — STATE OF INDIANA — REGISTERED PROFESSIONAL ENGINEER

TP101

Revised Set

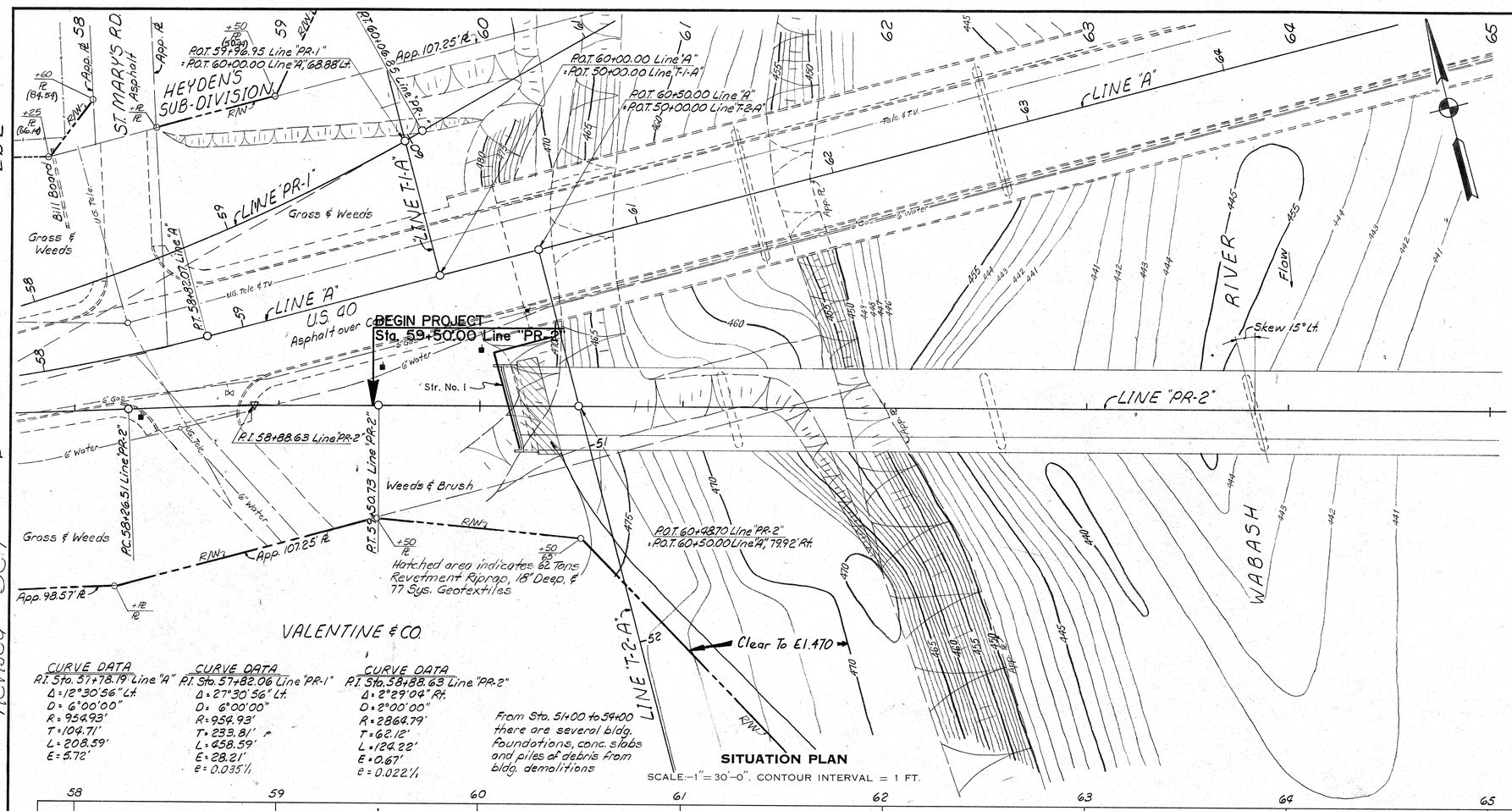

CURVE DATA	CURVE DATA	CURVE DATA
P.I. Sta. 57+78.19 Line "A"	P.I. Sta. 57+82.06 Line "PR-1"	P.I. Sta. 58+88.63 Line "PR-2"
Δ = 12°30'56" Lt.	Δ = 27°30'56" Lt.	Δ = 2°29'04" Rt.
D = 6°00'00"	D = 6°00'00"	D = 2°00'00"
R = 954.93'	R = 954.93'	R = 2864.79'
T = 104.71'	T = 233.81'	T = 62.12'
L = 208.59'	L = 458.59'	L = 124.22'
E = 5.72'	E = 28.21'	E = 0.67'
	e = 0.035'/'	e = 0.022'/'

From Sta. 51+00 to 54+00 there are several bldg. foundations, conc. slabs and piles of debris from bldg. demolitions

SITUATION PLAN

SCALE:—1" = 30'-0". CONTOUR INTERVAL = 1 FT.

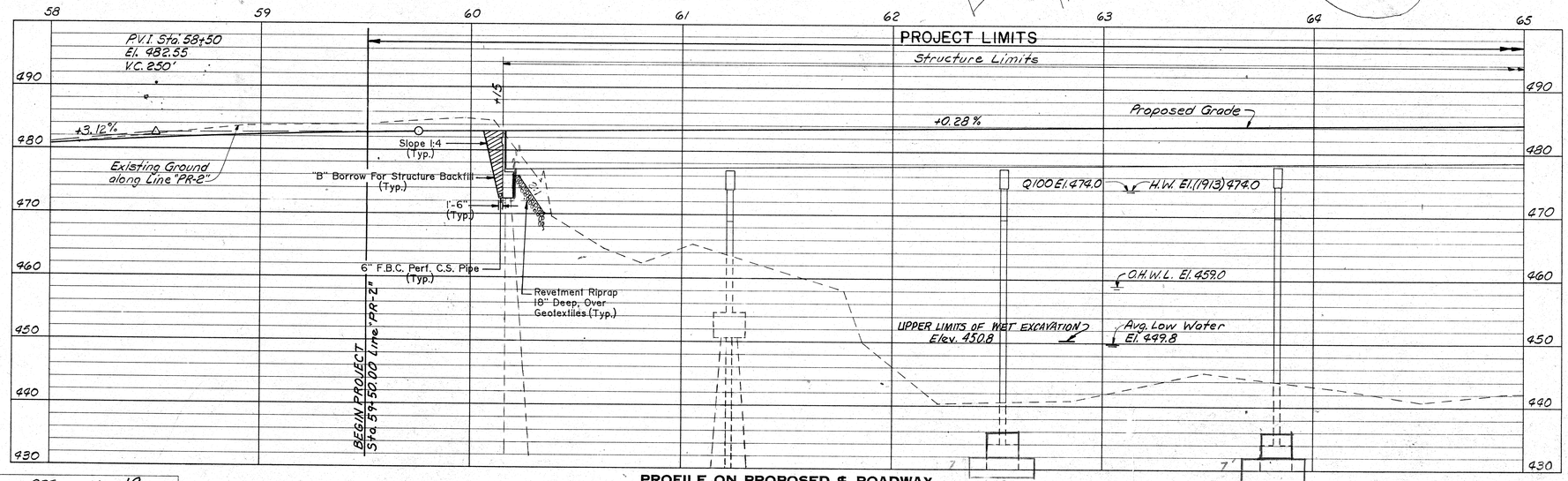

PROFILE ON PROPOSED ℄ ROADWAY

SCALES: HORIZ. 1" = 30'-0" VERT. 1" = 10'-0"

NOTE: FIELD NOTES, BOOK BR 2938

DRAWN QEE C'K'D JG
DESIGNED JG C'K'D HZ
TRACED C'K'D

SP-22396

LAYOUT EBL

CONT. COMP. WELDED STEEL PLATE GIRDER BRIDGE
7 SPANS: 105'-0, 2@130'-0, 150'-0, 2@130'-0, 105'-0
SKEW: 15° LT.; 32'-0 CLEAR ROADWAY; 6'-0 SIDEWALK
US 40 OVER WABASH RIVER

INDIANA DEPARTMENT OF ~~HIGHWAYS~~ TRANSPORTATION

VIGO COUNTY

SCALE:—AS NOTED DATE:— 19

DRAWING:- S16 OF 37 SHEET:- 41 OF 92
PROJECT:- M-T610(1) STATION:- 64+58
BRIDGE CONTRACT NO. B-18969
BRIDGE FILE:- 40-84-7279

HENRY C. KEEL REGISTERED No. 13602 STATE OF INDIANA PROFESSIONAL ENGINEER

TP117

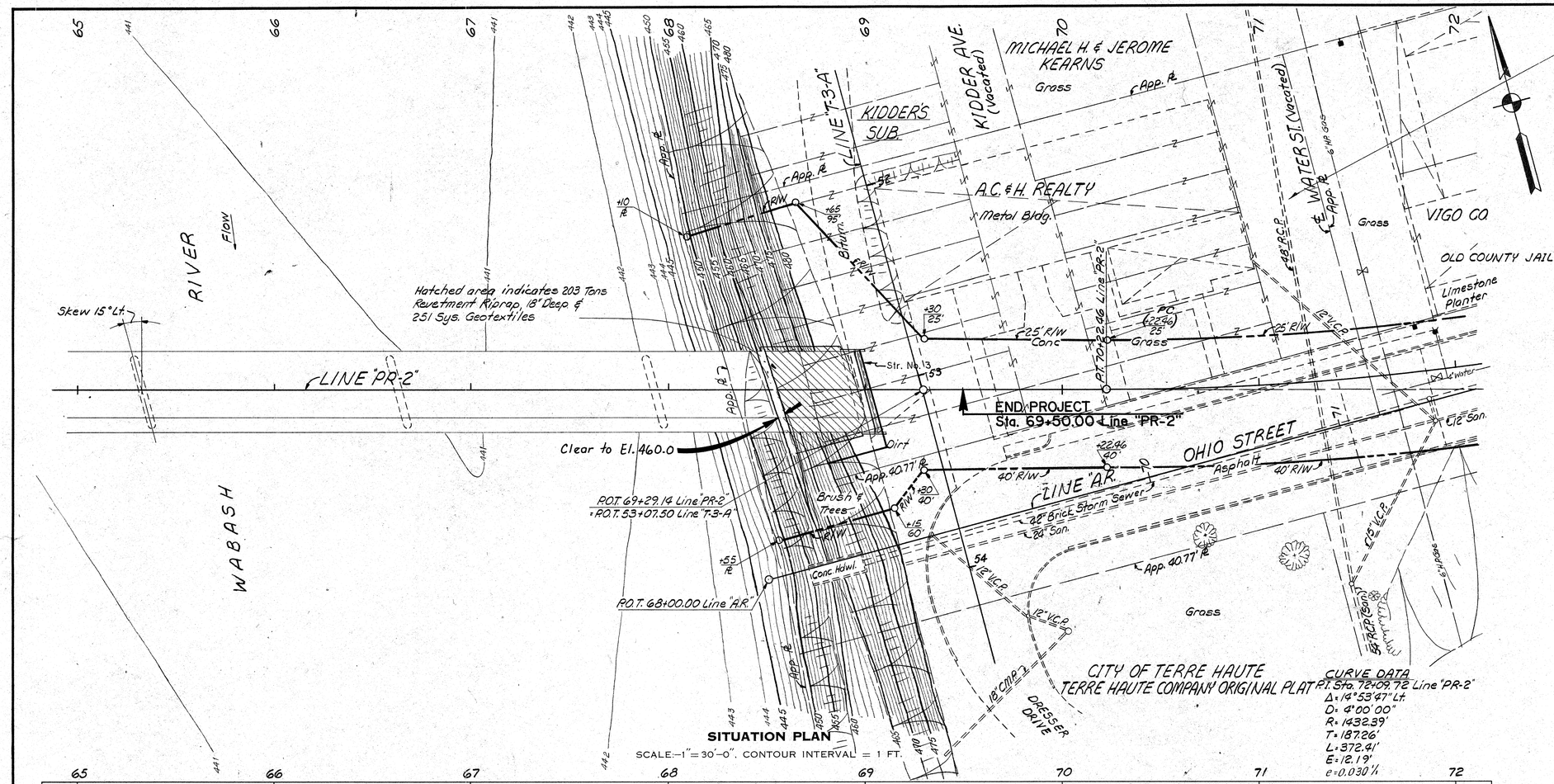

SITUATION PLAN

SCALE:—1"=30'-0", CONTOUR INTERVAL = 1 FT.

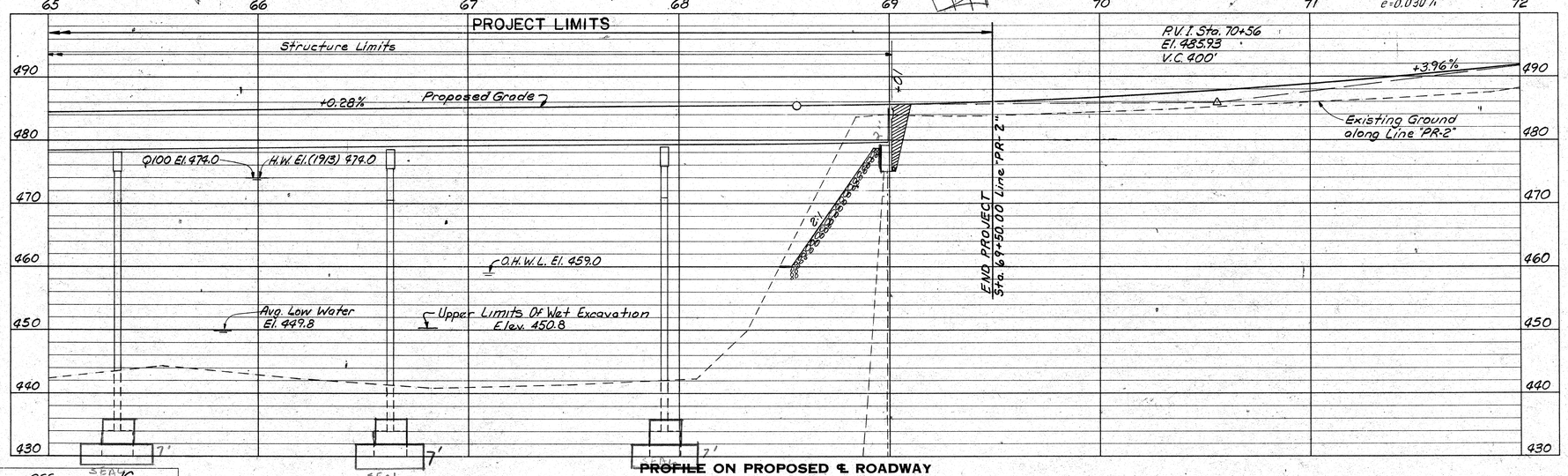

PROFILE ON PROPOSED ℄ ROADWAY

SCALES: HORIZ. 1"=30'-0" VERT. 1"=10'-0"

NOTE: FIELD NOTES, BOOK BR 2938

LAYOUT EBL

CONT. COMP. WELDED STEEL PLATE GIRDER BRIDGE
7 SPANS: 105'0, 2@130'0, 150'0, 2@130'0, 105'0
SKEW: 15° L.T.; 32'0 CLEAR ROADWAY; 6'0 SIDEWALK
US 40 OVER WABASH RIVER

INDIANA DEPARTMENT OF ~~HIGHWAYS~~ TRANSPORTATION
VIGO COUNTY

SCALE:—AS NOTED DATE:— 19

DRAWING:- S17 OF 37 SHEET:- 42 OF 92
PROJECT:- M-T610(1) STATION:— 64+58
BRIDGE CONTRACT NO. B-18969
BRIDGE FILE:- 40-84-7279

HENRY C. RHEE — REGISTERED No. 13692 — STATE OF INDIANA — PROFESSIONAL ENGINEER

DRAWN QEE CK'D JG
DES'GNED JG CK'D HZ
TRACED CK'D

SF-22396

TP117

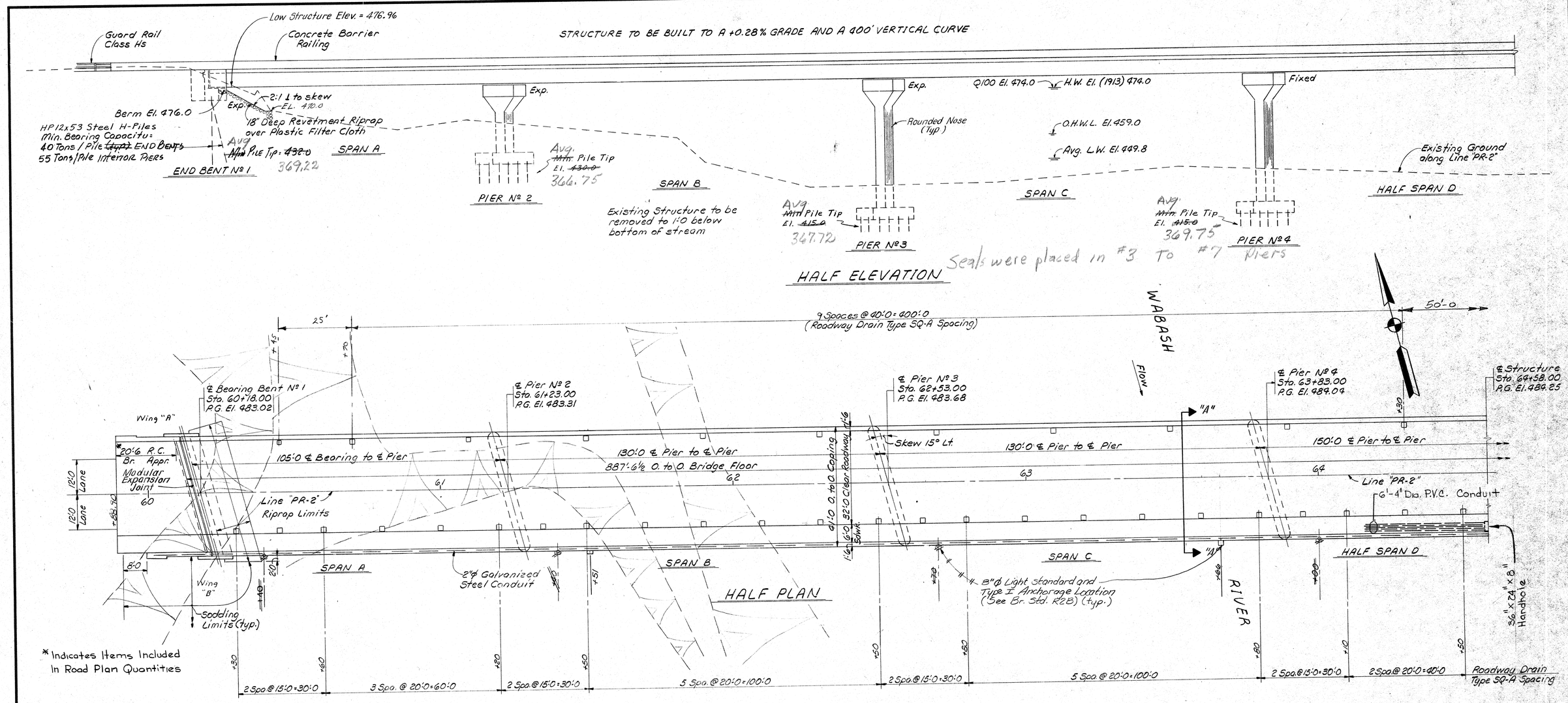

NOTES:

1. For general notes and design data SEE DWG. S4.
2. For typical section "A-A" SEE DWG. S3.
3. For index of standard drawings SEE DWG. S19.

Note changes

GENERAL PLAN EBL

CONT. COMP. WELDED STEEL PLATE GIRDER BRIDGE
7 SPANS: 105'-0, 2@130'-0, 150'-0, 2@130'-0, 105'-0
SKEW: 15° LT.; 32'-0 CLEAR ROADWAY; 6'-0 SIDEWALK
U.S. 40 OVER WABASH RIVER

INDIANA DEPARTMENT OF ~~HIGHWAYS~~ TRANSPORTATION
VIGO COUNTY

SCALE:- 1/16" = 1'-0 Unless Noted DATE:-

DRAWING:- S18 OF 37 SHEET: 43 OF 92
PROJECT:- M-T610(1)
CONTRACT NO. B-18969
BRIDGE FILE:- 40-84-7279

HENRY C. RHEE REGISTERED No. 13839 STATE OF INDIANA PROFESSIONAL ENGINEER

DESIGNED	HZ	C'K'D	JG
DRAWN	QEE	C'K'D	JG
TRACED		C'K'D	

REVISED 1-4-91 MIN BEARING CAPACITY Rev. 6/19/91 Revised location of light fixtures

STRUCTURE TO BE BUILT TO A +0.28 % GRADE AND A 400' VERTICAL CURVE

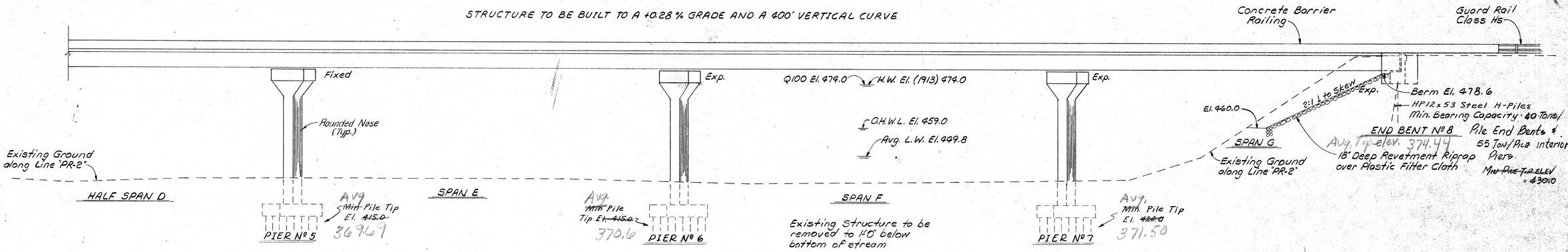

HALF ELEVATION

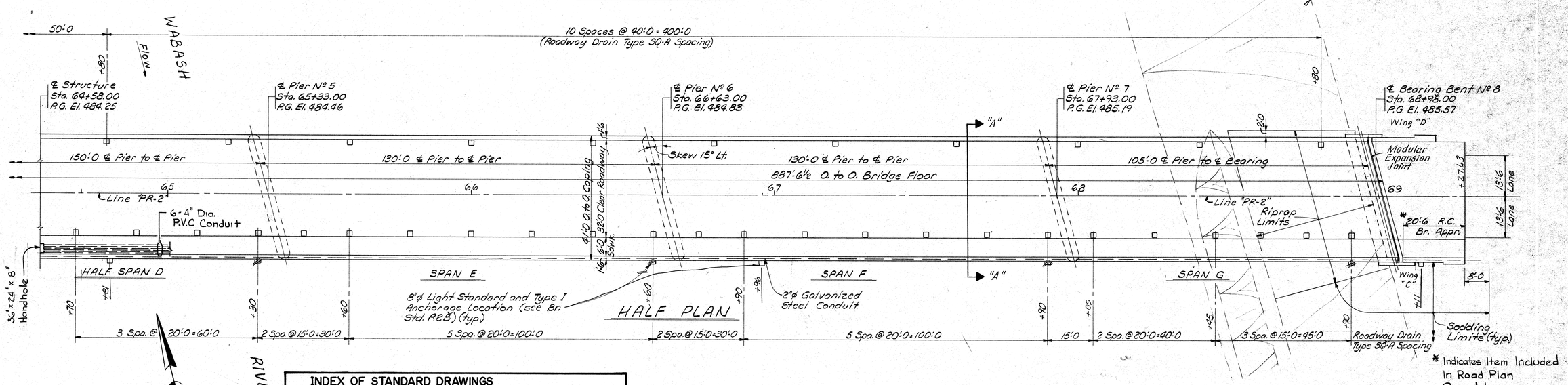

* Indicates Item Included In Road Plan Quantites

INDEX OF STANDARD DRAWINGS		
Br. Std.	Rd. Std.	Purpose
BR5		Railing Connection Details
C1		Reinforcing Bar Notes
C3		Constr. Joint Type A, Type IA Joint
D		Roadway Drains
R28		Bridge Lighting Details
S1		B Borrow, 6" F.B.C.P.C.S. Pipe

NOTES:

1. For general notes and design data SEE DWG. S4 .
2. For typical section "A-A" SEE DWG. S3 .

Note changes

GENERAL PLAN EBL

CONT. COMP. WELDED STEEL PLATE GIRDER BRIDGE
7 SPANS: 105'-0, 2@130'-0, 150'-0, 2@130'-0, 105'-0
SKEW: 15° LT.; 32'-0 CLEAR ROADWAY; 6'-0 SIDEWALK
U.S. 40 OVER WABASH RIVER

INDIANA DEPARTMENT OF ~~HIGHWAYS~~ TRANSPORTATION
VIGO COUNTY

SCALE:- 1/16"=1'-0 Unless Noted DATE:- 19

DRAWING:- S19 OF 37 SHEET:- 44 OF 92
PROJECT:- M-T610(1) STATION:- 64+58
BRIDGE CONTRACT NO. B-18969
BRIDGE FILE:- 40-84-7279

HENRY C. RHEE REGISTERED No. 13692 STATE OF INDIANA PROFESSIONAL ENGINEER

DESIGNED	HZ	C'K'D	JG
DRAWN	QEE	C'K'D	JG
TRACED		C'K'D	

SF-22317

REVISED 1-4-91 MINIMUM BEARING CAPACITY

Rev. 6/19/91 Revised location of light fixtures.

TP101

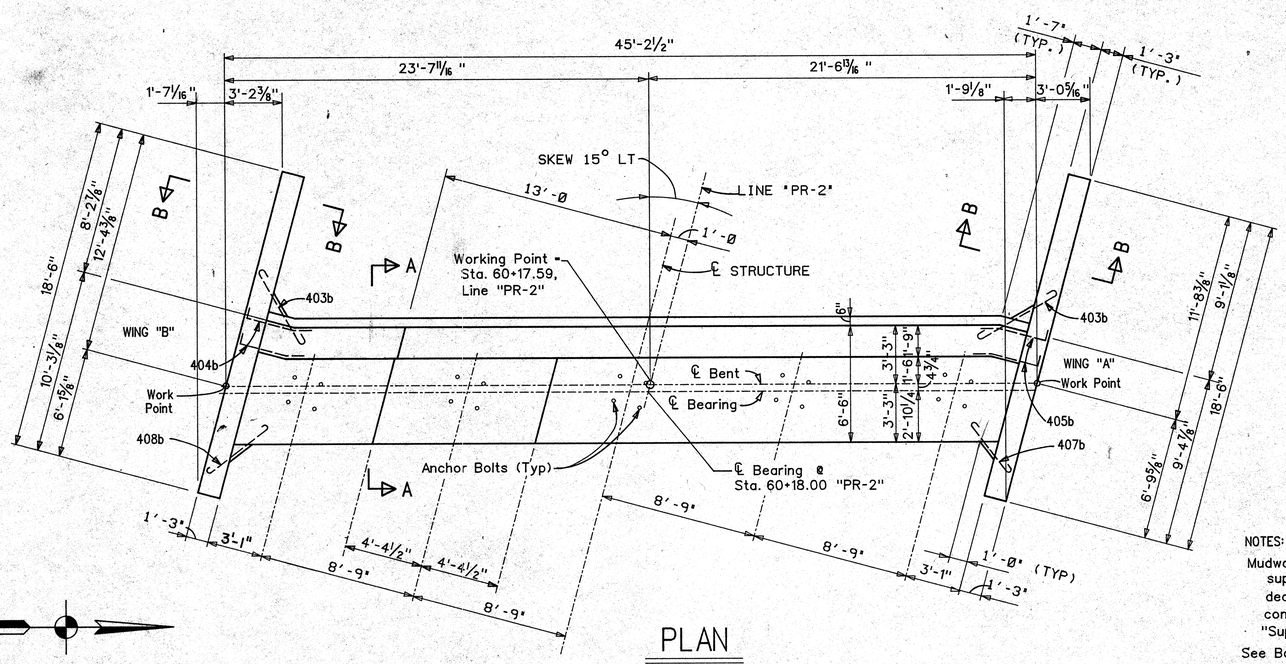

PLAN

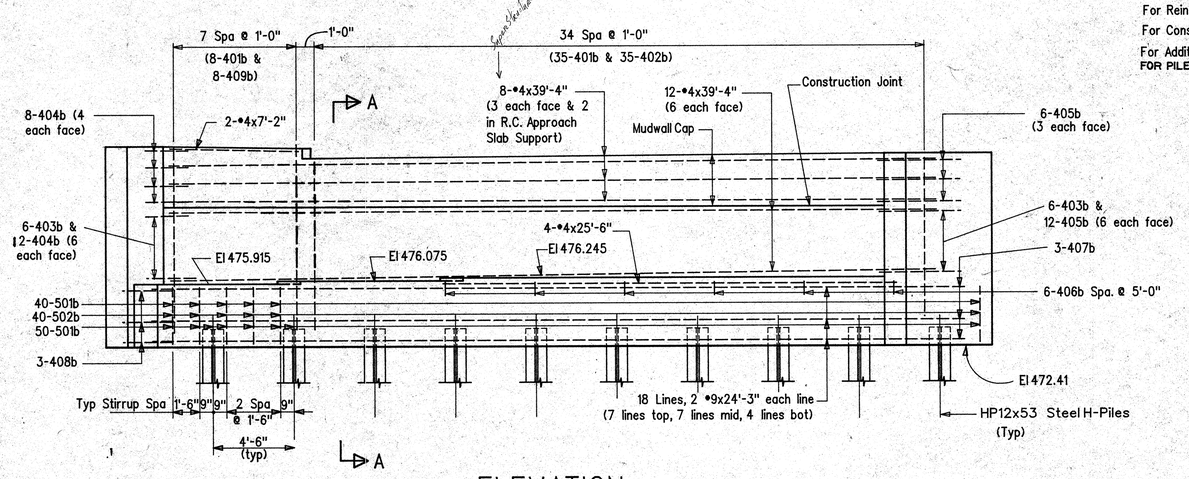

ELEVATION

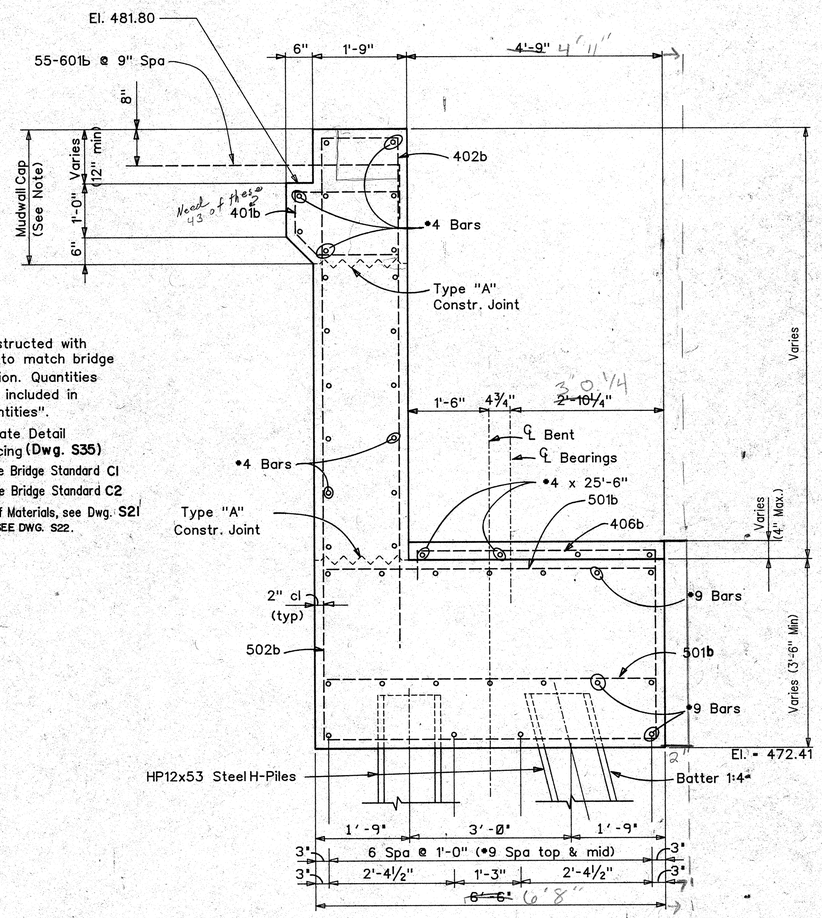

SECTION "A-A"

Scale: ¾" = 1'-0"

NOTES:

Mudwall cap to be constructed with superstructure and to match bridge deck surface elevation. Quantities contained within cap included in "Superstructure Quantities".

See Bottom Bearing Plate Detail For Anchor Bolt Spacing **(Dwg. S35)**

For Reinforcing Bar Notes, see Bridge Standard C1

For Constr Joint Type "A", see Bridge Standard C2

For Additional Details and Bill of Materials, see Dwg. **S21**

FOR PILE ANCHORAGE DETAIL SEE DWG. S22.

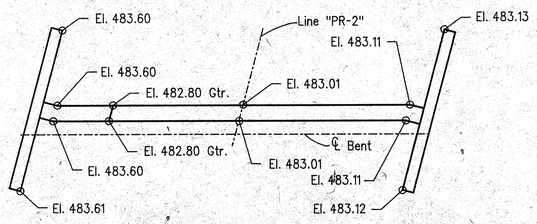

END BENT No. 1 EBL ELEVATIONS DIAGRAM

Scale: ⅛" = 1'-0"

END BENT No 1 EBL DETAILS

INDIANA DEPARTMENT OF TRANSPORTATION

VIGO COUNTY

SCALE:- ¼" = 1'-0" Unless Noted DATE:- 19

DRAWING:-S20 OF 37 SHEET:- 45 OF 92

PROJECT:- M-T610(1)

BRIDGE CONTRACT NO. B-18969

BRIDGE FILE:- 40-84-7279

DESIGNED WTJ DAP C'K'D NLB

DRAWN MAH C'K'D NLB

TRACED C'K'D

HENRY C. RHEE No. 13692 STATE OF INDIANA PROFESSIONAL ENGINEER

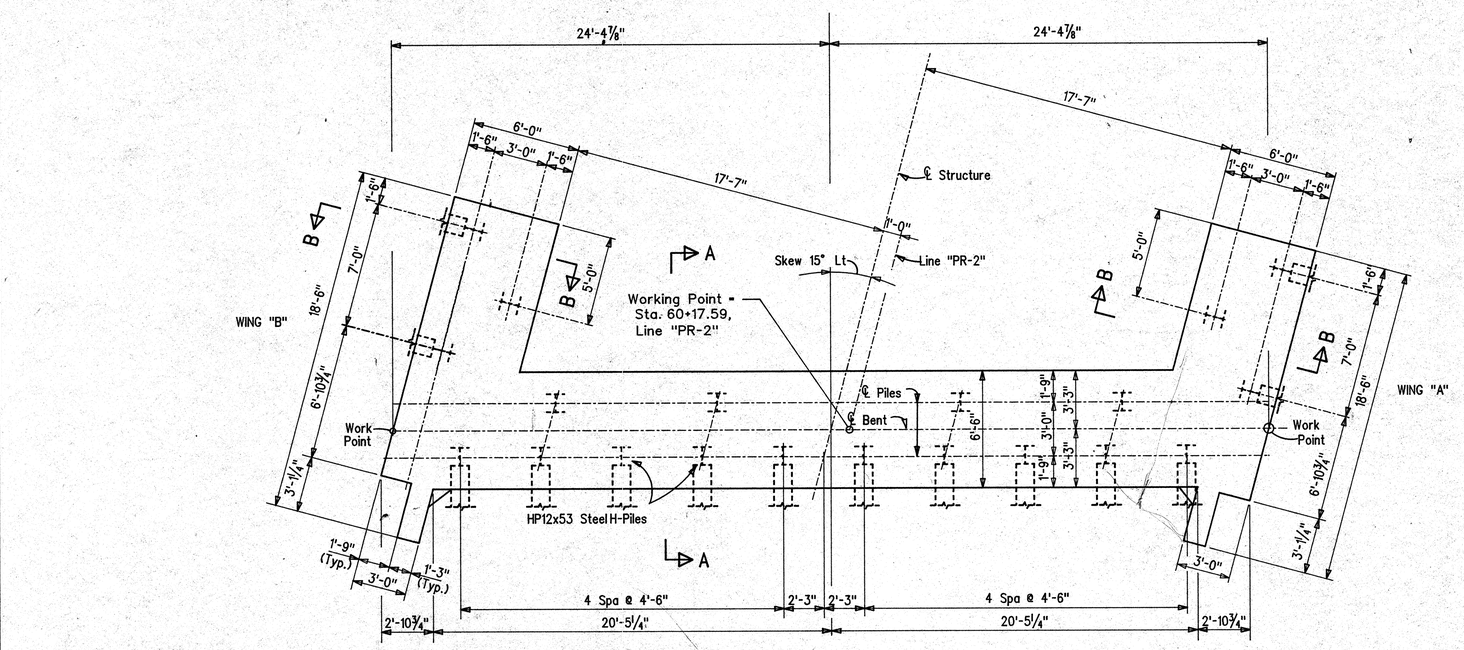

FOOTING PLAN

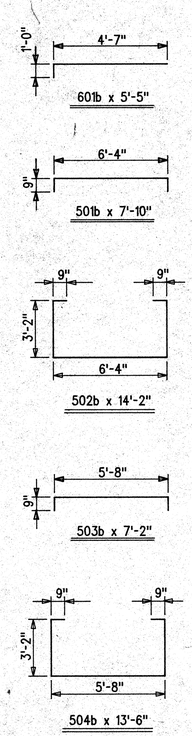

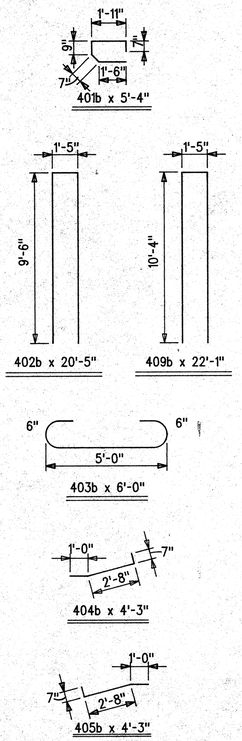

BILL OF MATERIALS

EPOXY COATED REINFORCING STEEL			
SIZE OR MARK	NO OF BARS	LENGTH	WEIGHT (lbs)
✓ #9	36	24'-3"	2968
✓ #9	28	15'-0"	1428
	Total No 9		4396
✓ 501b	90	7'-10"	735
✓ 502b	40	14'-2"	591
✓ 503b	48	7'-2"	358
✓ 504b	24	13'-6"	338
✓ #5	32	9'-6"	317
✓ #5	32	10'-0"	334
✓ #5	6	10'-2"	64
✓ #5	6	10'-9"	67
	Total No 5		2805
✓ 402b	35	20'-5"	477
✓ 403b	12	6'-0"	48
✓ 404b	20	4'-3"	57
✓ 405b	18	4'-3"	51
✓ 406b	6	5'-7"	22
✓ 407b	3	4'-4"	9
✓ 408b	3	5'-2"	10
✓ 409b	8	22'-1"	118
✓ #4	12	39'-4"	315
✓ #4	4	25'-6"	68
✓ #4	36	18'-2"	437
✓ #4	16	4'-6"	48
✓ #4	2	7'-2"	10
	Total No 4		1671
#4	2	7'4"	10
Total Epoxy Coated Reinf Steel			8872
CONCRETE			
Class "A"			82.8 CYS
MISCELLANEOUS			
Surface Seal (Estimated Quantity)			600 Sft
HP12x53 Steel H-Piles (20x41.4')			828 Lft
1"x15" Steel Anchor Bolts w/ Flat Washers and Hex-Nuts			20 Each

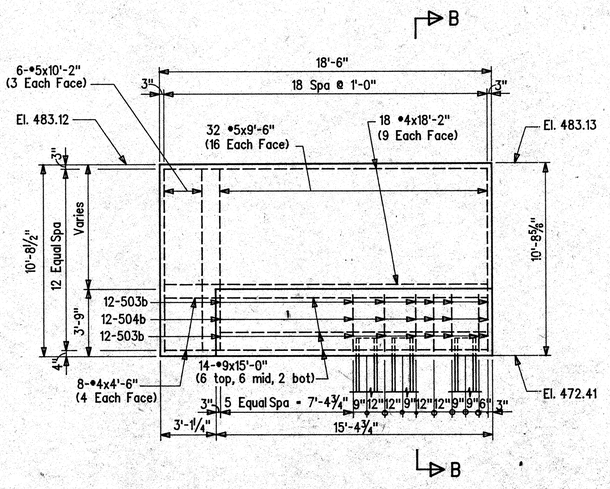

WING "A"

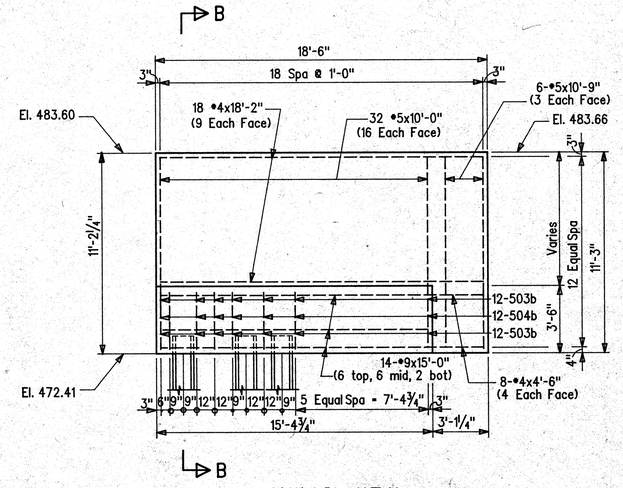

WING "B"

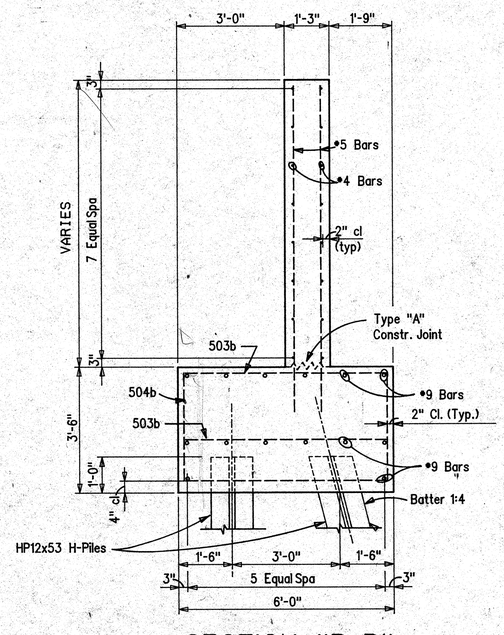

SECTION "B-B"

Scale: ½" = 1'-0"

NOTES:
For Reinforcing Bar Notes, see Bridge Standard C1
For Constr Joint Type "A", see Bridge Standard C3
For Additional Details, see Dwg. S20

END BENT No 1 EBL DETAILS

INDIANA DEPARTMENT OF TRANSPORTATION

VIGO COUNTY

SCALE:- ¼" = 1'-0" Unless Noted DATE:- 19

DESIGNED HI/DGP C'K'D NKB
DRAWN MAH C'K'D NKB
TRACED ____ C'K'D ____

DRAWING:- S21 OF 37 SHEET:- 46 OF 92
PROJECT:- M-T610(1)
BRIDGE CONTRACT NO. B-18969
BRIDGE FILE:- 40-94-7279

HENRY C. RHEE ENGINEER No. 13692 STATE OF INDIANA PROFESSIONAL ENGINEER

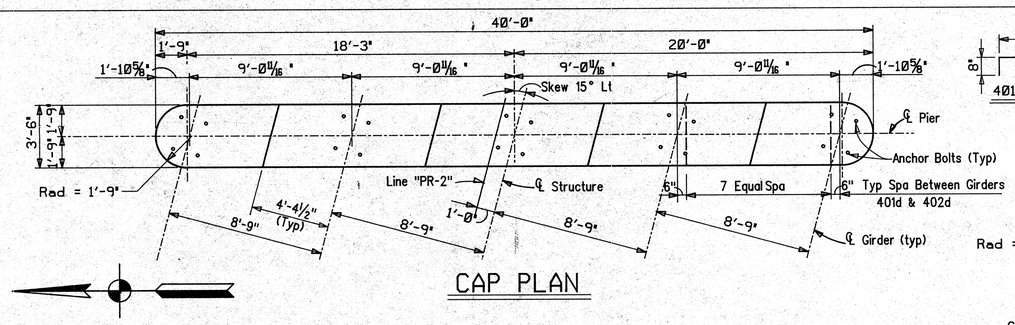

CAP PLAN

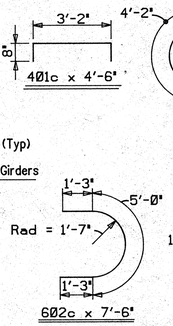

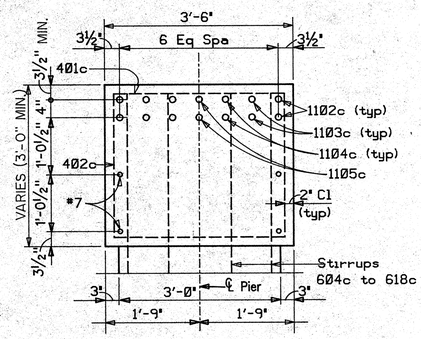

SECTION "BB"

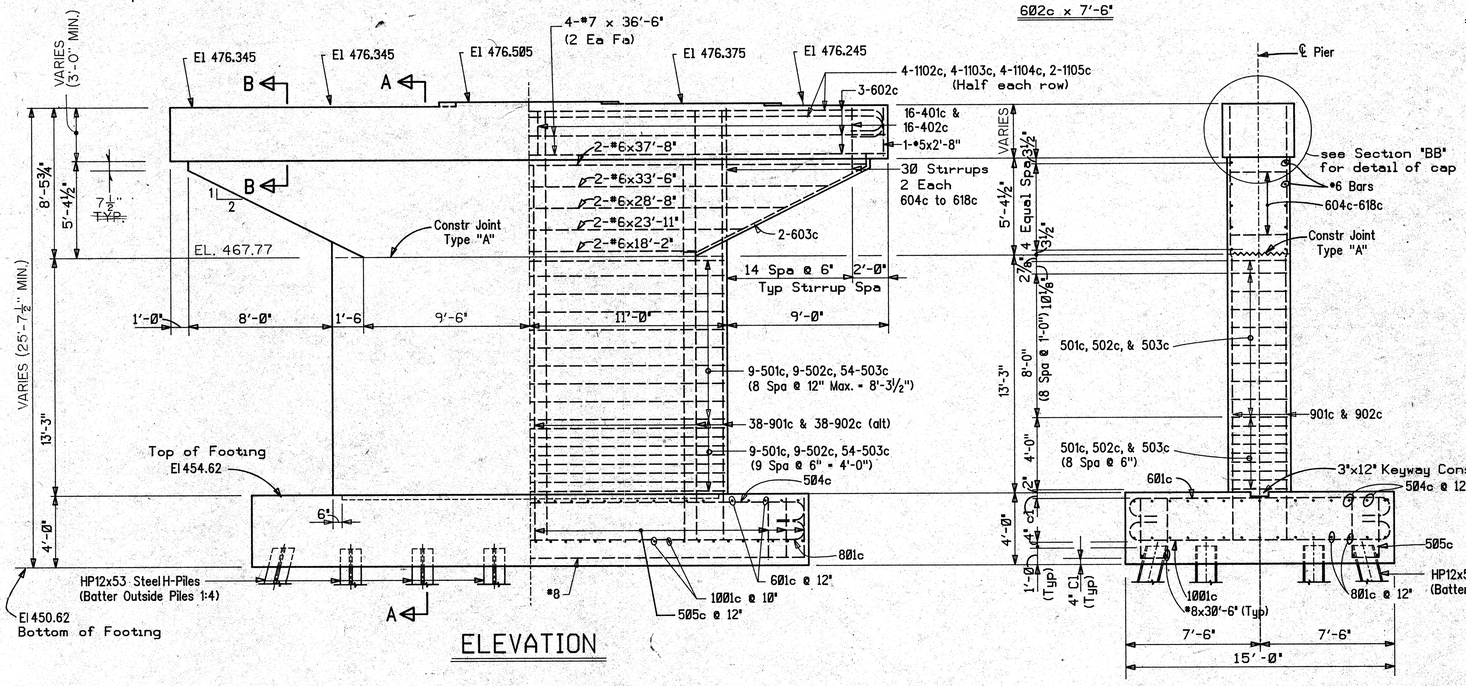

ELEVATION

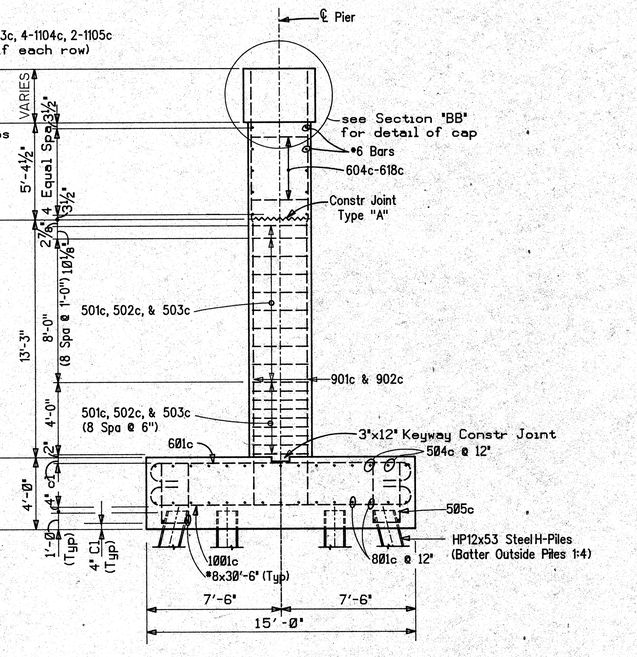

SECTION "AA"

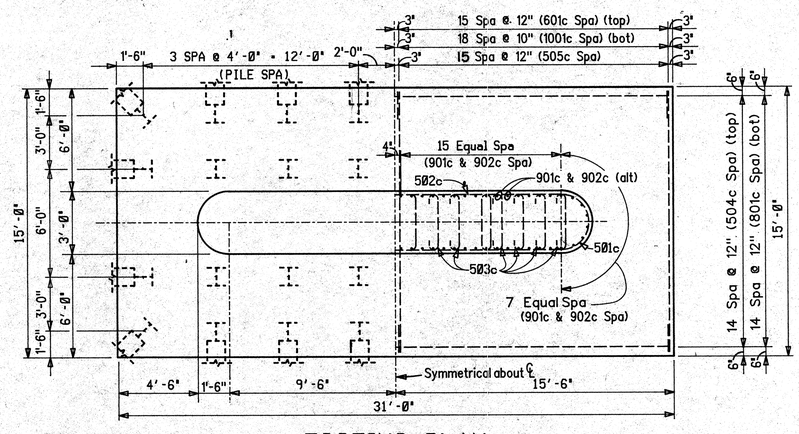

FOOTING PLAN

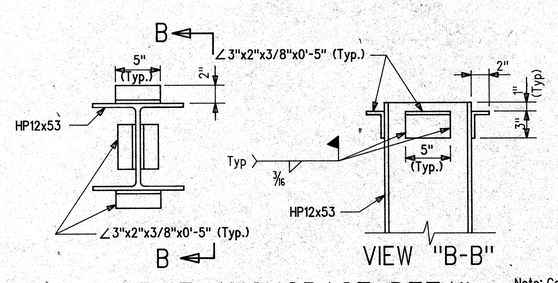

PILE ANCHORAGE DETAIL

Scale: 1/2" = 1"

Note: Cost of Pile Anchorage to be included in the cost of piling.

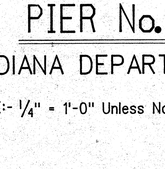

MARK	"A"	"B"	LENGTH
1102c	36'-0"	1'-7"	39'-2"
1103c	38'-6	1'-7"	41'-8"
1104c	39'-2	1'-7"	42'-4"
1105c	39'-5	1'-7"	42'-7"
1001c	14'-6"	1'-5"	17'-4"
801c	30'-6"	11"	32'-4"
601c	14-6"	8"	15'-10"
503c	2'-8"	8"	4'-0"
504c	30'-6"	8"	31'-10"

MARK	"C"	"D"	"E"	LENGTH
604c	2'-4"	3'-8"	1'-0"	11'-8"
605c	2'-4"	3'-11"	1'-0"	12'-2"
606c	2'-4"	4'-2"	1'-0"	12'-8"
607c	2'-4"	4'-5"	1'-0"	13'-2"
608c	2'-4"	4'-8"	1'-0"	13'-8"
609c	2'-4"	4'-11"	1'-0"	14'-2"
610c	2'-4"	5'-2"	1'-0"	14'-8"
611c	2'-4"	5'-5"	1'-0"	15'-2"
612c	2'-4"	5'-8"	1'-0"	15'-8"
613c	2'-4"	5'-11"	1'-0"	16'-2"
614c	2'-4"	6'-2"	1'-0"	16'-8"
615c	2'-4"	6'-5"	1'-0"	17'-2"
616c	2'-4"	6'-8"	1'-0"	17'-8"
617c	2'-4"	6'-11"	1'-0"	18'-2"
618c	2'-4"	7'-2"	1'-0"	18'-8"
505c	1'-6"	3'-4"	0"	8'-2"
402c	3'-2"	2'-8"	8"	9'-10"

Notes:
For Reinforcing Bar Notes, see Bridge Standard C1.
See Bottom Bearing Plate Detail for Anchor Bolt Spacing

BILL OF MATERIALS

REINFORCING STEEL			
SIZE OR MARK	NO OF BARS	LENGTH	WEIGHT (lbs)
1102c	4	39'-2"	
1103c	4	41'-8"	
1104c	4	42'-4"	
1105c	2	42'-7"	
	Total No 11		3070
1001c	38	17'-4"	
	Total No 10		2834
901c	38	25'-5"	
902c	38	22'-5"	
	Total No 9		6180
801c	15	32'-4"	
*8	4	30'-6"	
	Total No 8		1621
*7	4	36'-6"	
	Total No 7		298
601c	32	15'-10"	
602c	6	7'-6"	
603c	4	13'-0"	
604c	4	11'-8"	
605c	4	12'-2"	
606c	4	12'-8"	
607c	4	13'-2"	
608c	4	13'-8"	
609c	4	14'-2"	
610c	4	14'-8"	
611c	4	15'-2"	
612c	4	15'-8"	
613c	4	16'-2"	
614c	4	16'-8"	
615c	4	17'-2"	
616c	4	17'-8"	
617c	4	18'-2"	
618c	4	18'-8"	
*6	2	37'-8"	
*6	2	33'-6"	
*6	2	28'-8"	
*6	2	23'-11"	
*6	2	18'-2"	
	Total No 6		2700
501c	36	20'-8"	
502c	36	21'-8"	
503c	216	4'-0"	
504c	15	31'-10"	
505c	64	8'-2"	
*5	2	2'-8"	
	Total No 5		3543
401c	32	4'-6"	
402c	32	9'-10"	
	Total No 4		306
Total Reinforcing Steel			20,552
Surface Seal			200 SFT
MISCELLANEOUS			
HP12x53 Steel H-Piles (32x 21.6)			692 Lft
1"x15" Steel Anchor Bolts w/ Flat Washer and Hex-Nut			20 Ea.
CONCRETE			
Class "B" in Footing			68.9 CYS
Class "B" above Footing			31.4 CYS
Class "A"			33.7 CYS

PIER No. 2 EBL DETAILS

INDIANA DEPARTMENT OF TRANSPORTATION

VIGO COUNTY

SCALE:- 1/4" = 1'-0" Unless Noted DATE:- 19

DESIGNED WJ/SAG C'K'D NKB
DRAWN MAH C'K'D NKB
TRACED ____ C'K'D ____

Left side shows concrete dimensions and pile spacing

Right side shows reinforcing steel

DRAWING:- S22 OF 37 SHEET:- 47 OF 92
PROJECT:- M-T610(1)
BRIDGE CONTRACT NO. B-18969
BRIDGE FILE:- 40-84-7279

HENRY G. RHEE REGISTERED No. 13692 STATE OF INDIANA PROFESSIONAL ENGINEER

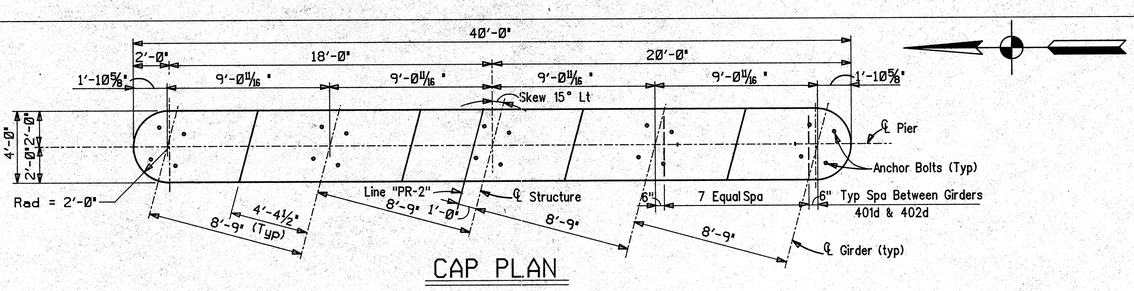

CAP PLAN

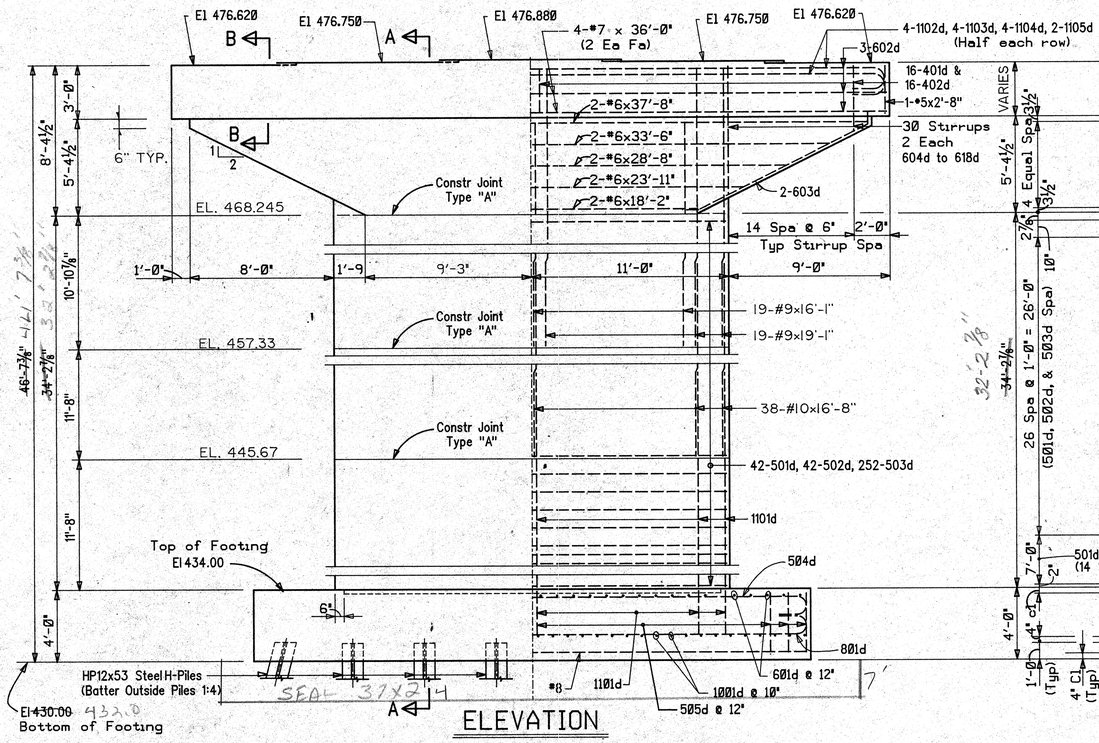

ELEVATION

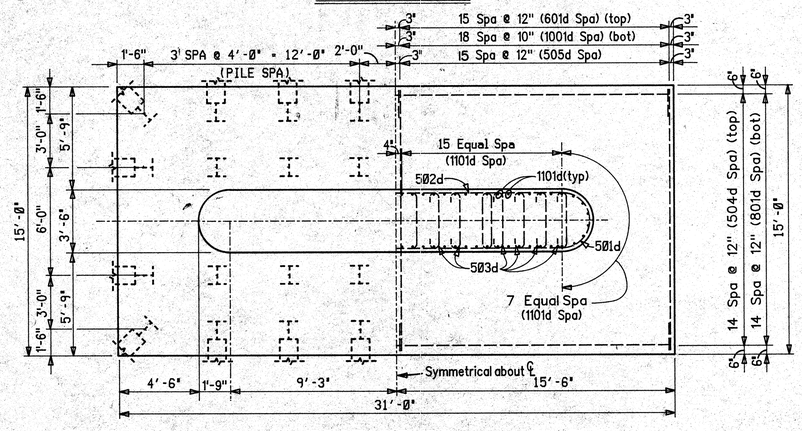

FOOTING PLAN

Left side shows concrete dimensions and pile spacing

Right side shows reinforcing steel

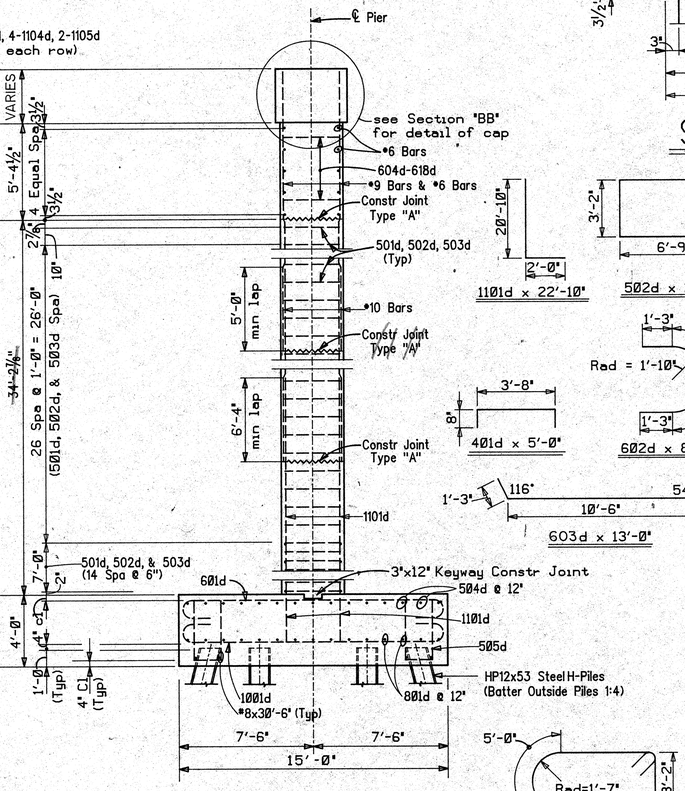

SECTION "AA"

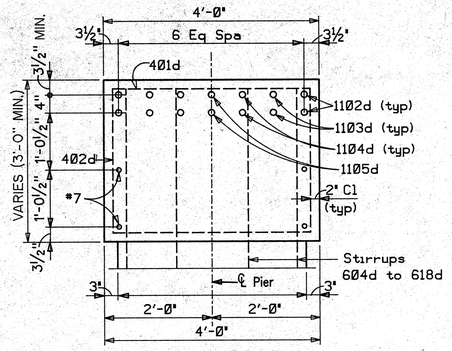

SECTION "BB"

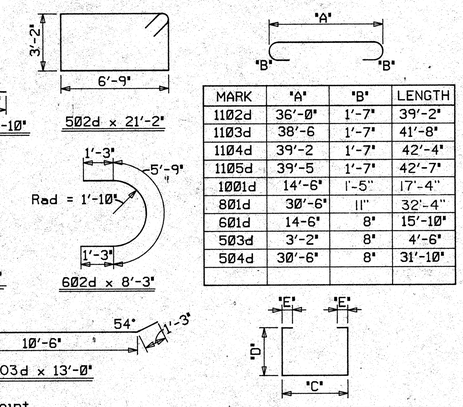

MARK	"A"	"B"	LENGTH
1102d	36'-0"	1'-7"	39'-2"
1103d	38'-6	1'-7"	41'-8"
1104d	39'-2	1'-7"	42'-4"
1105d	39'-5	1'-7"	42'-7"
1001d	14'-6"	1'-5"	17'-4"
801d	30'-6"	11"	32'-4"
601d	14-6"	8"	15'-10"
503d	3'-2"	8"	4'-6"
504d	30'-6"	8"	31'-10"

MARK	"C"	"D"	"E"	LENGTH
604d	2'-4"	3'-8"	1'-0"	11'-8"
605d	2'-4"	3'-11"	1'-0"	12'-2"
606d	2'-4"	4'-2"	1'-0"	12'-8"
607d	2'-4"	4'-5"	1'-0"	13'-2"
608d	2'-4"	4'-8"	1'-0"	13'-8"
609d	2'-4"	4'-11"	1'-0"	14'-2"
610d	2'-4"	5'-2"	1'-0"	14'-8"
611d	2'-4"	5'-5"	1'-0"	15'-2"
612d	2'-4"	5'-8"	1'-0"	15'-8"
613d	2'-4"	5'-11"	1'-0"	16'-2"
614d	2'-4"	6'-2"	1'-0"	16'-8"
615d	2'-4"	6'-5"	1'-0"	17'-2"
616d	2'-4"	6'-8"	1'-0"	17'-8"
617d	2'-4"	6'-11"	1'-0"	18'-2"
618d	2'-4"	7'-2"	1'-0"	18'-8"
505d	1'-6"	3'-4"	0"	8'-2"
402d	3'-8"	2'-8"	8"	10'-4"

Notes:
For Reinforcing Bar Notes, see Bridge Standard C1.
See Bottom Bearing Plate Detail for Anchor Bolt Spacing

BILL OF MATERIALS

REINFORCING STEEL			
SIZE OR MARK	NO OF BARS	LENGTH	WEIGHT (lbs)
1101d	76	22'-10"	
1102d	4	39'-2"	
1103d	4	41'-8"	
1104d	4	42'-4"	
1105d	2	42'-7"	
	Total No 11		12290
1001d	38	17'-4"	
#10	76	16'-8"	
	Total No 10		8285
#9	38	19'-1"	
#9	38	16'-1"	
	Total No 9		4544
801d	15	32'-4"	
#8	4	30'-6"	
	Total No 8		1621
#7	4	36'-0"	
	Total No 7		294
601d	32	15'-10"	
602d	6	8'-3"	
603d	4	13'-0"	
604d	4	11'-8"	
605d	4	12'-2"	
606d	4	12'-8"	
607d	4	13'-2"	
608d	4	13'-8"	
609d	4	14'-2"	
610d	4	14'-8"	
611d	4	15'-2"	
612d	4	15'-8"	
613d	4	16'-2"	
614d	4	16'-8"	
615d	4	17'-2"	
616d	4	17'-8"	
617d	4	18'-2"	
618d	4	18'-8"	
#6	2	37'-8"	
#6	2	33'-6"	
#6	2	28'-8"	
#6	2	23'-11"	
#6	2	18'-2"	
	Total No 6		2,707
501d	84	17'-10"	
502d	84	21'-2"	
503d	504	4'-6"	
504d	15	31'-10"	
505d	64	8'-2"	
#5	2	2'-8"	
	Total No 5		6,831
401d	32	5'-0"	
402d	32	10'-4"	
	Total No 4		328
Total Reinforcing Steel			36,900
Surface Seal			200 SFT
MISCELLANEOUS			
HP12x53 Steel H-Piles (32x16)=			512 Lft
1"x15" Steel Anchor Bolts w/ Flat Washer & Hex-Nut			20 Ea.
CONCRETE			
Class "B" in Footing			68.9 CYS
Class "B" above Footing			~~94.3 CYS~~ 88.8
Class "A"			38.6 CYS

CONCRETE FOUNDATION SEAL 234.0 C.Y.

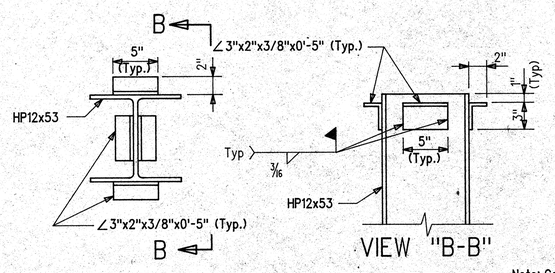

PILE ANCHORAGE DETAIL

Scale: 1/2" = 1"

Note: Cost of Pile Anchorage to be included in the cost of piling.

Note changes

PIER No 3 EBL DETAILS

INDIANA DEPARTMENT OF TRANSPORTATION

VIGO COUNTY

SCALE:- 1/4" = 1'-0" Unless Noted DATE:- 19

DESIGNED HZ/JDG C'K'D NKB
DRAWN MDH C'K'D NKB
TRACED ____ C'K'D ____

DRAWING:- S23 OF 37 SHEET:- 48 OF 92
PROJECT:- M-T610(1)
BRIDGE CONTRACT NO. B-18969
BRIDGE FILE:- 40-84-7279

HENRY C. RHEE REGISTERED No. 13692 STATE OF INDIANA PROFESSIONAL ENGINEER

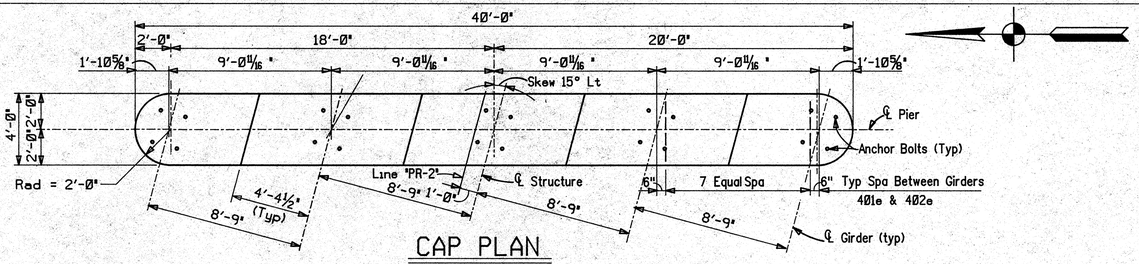

CAP PLAN

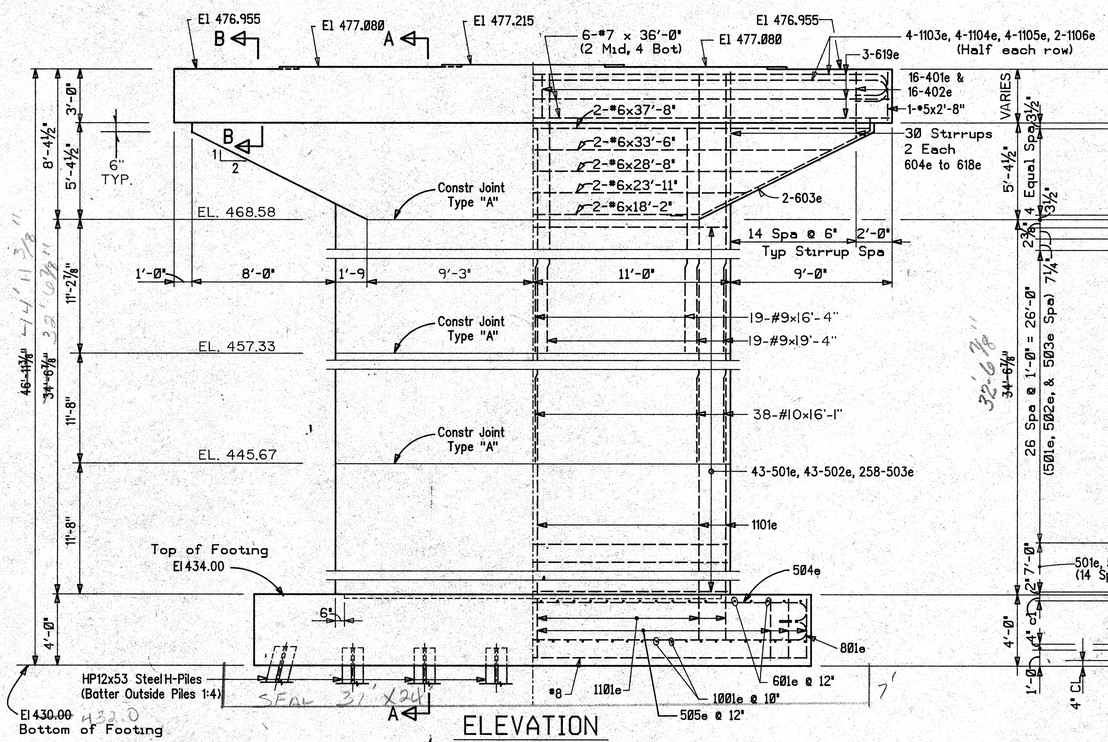

ELEVATION

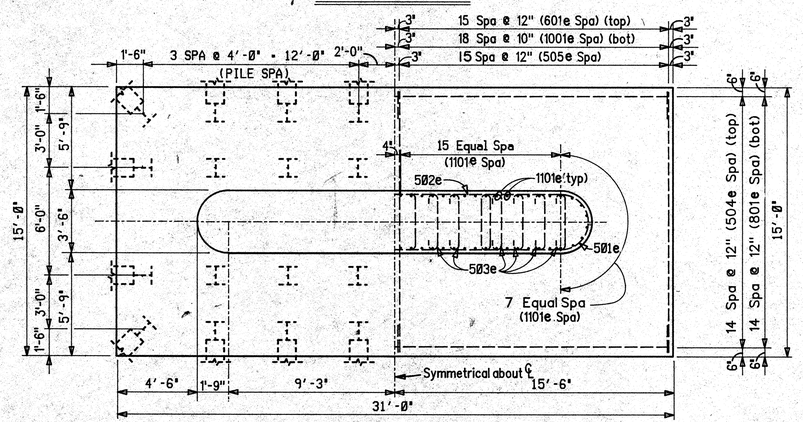

FOOTING PLAN

Left side shows concrete dimensions and pile spacing

Right side shows reinforcing steel

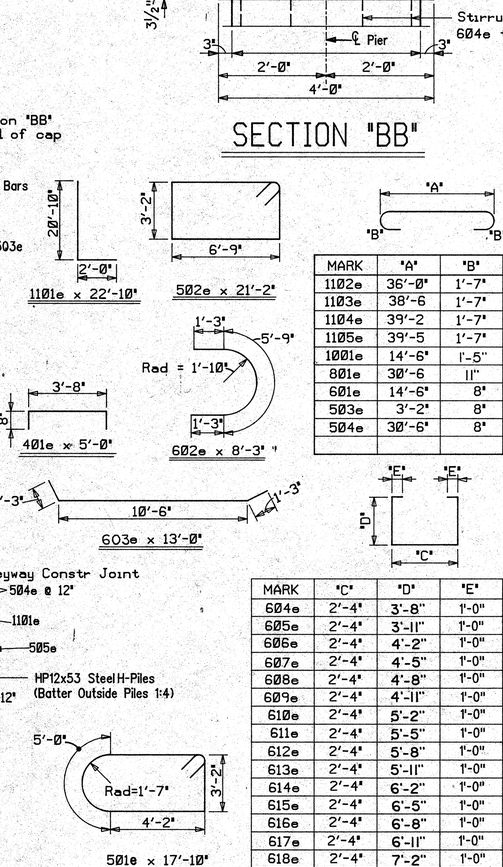

SECTION "AA"

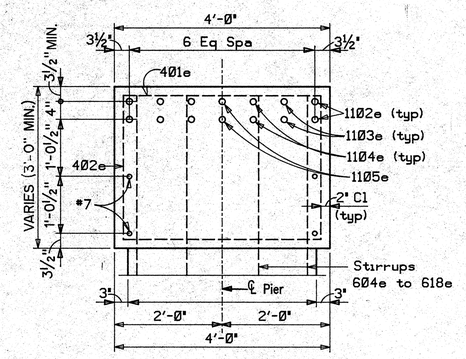

SECTION "BB"

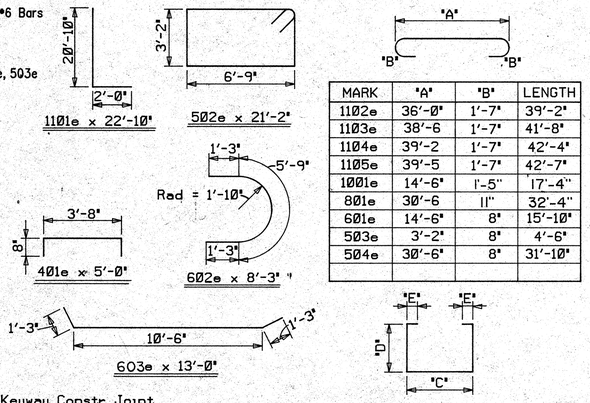

MARK	"A"	"B"	LENGTH
1102e	36'-0"	1'-7"	39'-2"
1103e	38'-6	1'-7"	41'-8"
1104e	39'-2	1'-7"	42'-4"
1105e	39'-5	1'-7"	42'-7"
1001e	14'-6"	1'-5"	17'-4"
801e	30'-6	11"	32'-4"
601e	14'-6"	8"	15'-10"
503e	3'-2"	8"	4'-6"
504e	30'-6"	8"	31'-10"

MARK	"C"	"D"	"E"	LENGTH
604e	2'-4"	3'-8"	1'-0"	11'-8"
605e	2'-4"	3'-11"	1'-0"	12'-2"
606e	2'-4"	4'-2"	1'-0"	12'-8"
607e	2'-4"	4'-5"	1'-0"	13'-2"
608e	2'-4"	4'-8"	1'-0"	13'-8"
609e	2'-4"	4'-11"	1'-0"	14'-2"
610e	2'-4"	5'-2"	1'-0"	14'-8"
611e	2'-4"	5'-5"	1'-0"	15'-2"
612e	2'-4"	5'-8"	1'-0"	15'-8"
613e	2'-4"	5'-11"	1'-0"	16'-2"
614e	2'-4"	6'-2"	1'-0"	16'-8"
615e	2'-4"	6'-5"	1'-0"	17'-2"
616e	2'-4"	6'-8"	1'-0"	17'-8"
617e	2'-4"	6'-11"	1'-0"	18'-2"
618e	2'-4"	7'-2"	1'-0"	18'-8"
505e	1'-6"	3'-4"	0"	8'-2"
402e	3'-8"	2'-8"	8"	10'-4"

Notes:
For Reinforcing Bar Notes, see Bridge Standard C1.
See Bottom Bearing Plate Detail for Anchor Bolt Spacing

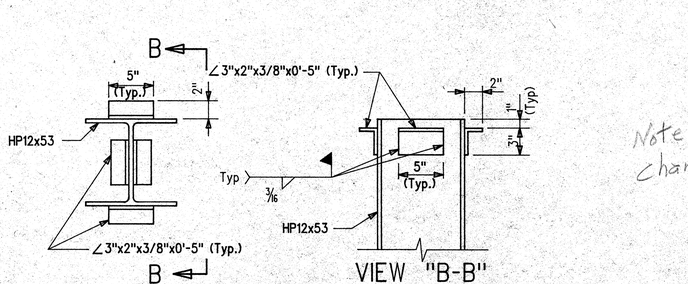

PILE ANCHORAGE DETAIL

Scale: ½" = 1"

Note: Cost of Pile Anchorage to be included in the cost of piling.

Note changes

BILL OF MATERIALS

REINFORCING STEEL			
SIZE OR MARK	NO OF BARS	LENGTH	WEIGHT (lbs)
1101e	76	22'-10"	
1102e	4	39'-2"	
1103e	4	41'-8"	
1104e	4	42'-4"	
1105e	2	42'-7"	
	Total No 11		12290
1001e	38	17'-4"	
•10	76	16'-8"	
	Total No 10		8285
•9	38	19'-4"	
•9	38	16'-4"	
	Total No 9		4608
801e	15	32'-4"	
•8	4	30'-6"	
	Total No 8		1621
•7	4	36'-0"	
	Total No 7		294
601e	32	15'-10"	
602e	6	8'-3"	
603e	4	13'-0"	
604e	4	11'-8"	
605e	4	12'-2"	
606e	4	12'-8"	
607e	4	13'-2"	
608e	4	13'-8"	
609e	4	14'-2"	
610e	4	14'-8"	
611e	4	15'-2"	
612e	4	15'-8"	
613e	4	16'-2"	
614e	4	16'-8"	
615e	4	17'-2"	
616e	4	17'-8"	
617e	4	18'-2"	
618e	4	18'-8"	
•6	2	37'-8"	
•6	2	33'-6"	
•6	2	28'-8"	
•6	2	23'-11"	
•6	2	18'-2"	
	Total No 6		2707
501e	86	17'-10"	
502e	86	21'-2"	
503e	516	4'-6"	
504e	15	31'-10"	
505e	68	8'-	
•5	2	2'-8"	
	Total No 5		6969
401e	32	5'-0"	
402e	32	10'-4"	
	Total No 4		328
Total Reinforcing Steel			37,102
Surface Seal			200 SFT
MISCELLANEOUS			
HP12x53 Steel H-Piles (32x16)			512 Lft
1"x15" Steel Anchor Bolts w/ Flat Washer and Hex-Nut			20 Ea.
CONCRETE			
Class "B" in Footing			68.9 CYS
Class "B" above Footing			~~95.2 CYS~~ 89.7
Class "A"			38.5 CYS

CONCRETE FOUNDATIONS EAL 2241 C-10

PIER No 4 EBL DETAILS

INDIANA DEPARTMENT OF TRANSPORTATION

VIGO COUNTY

SCALE:- ¼" = 1'-0" Unless Noted DATE:- 19

DESIGNED HZ/SAG C'K'D NKB
DRAWN MAH C'K'D NKB
TRACED ____ C'K'D ____

DRAWING:- S24 OF 37 SHEET:- 49 OF 92
PROJECT:- M-T610(1)
BRIDGE CONTRACT NO. B-18969
BRIDGE FILE:- 40-84-7279

HAR

HENRY C. RHEE REGISTERED No. 13692 STATE OF INDIANA PROFESSIONAL ENGINEER

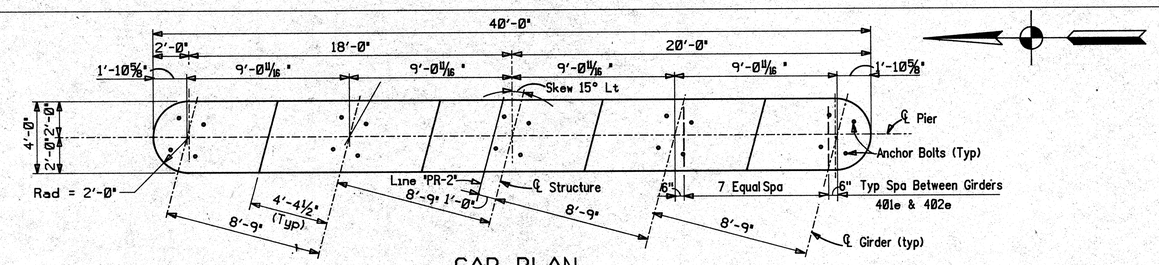

CAP PLAN

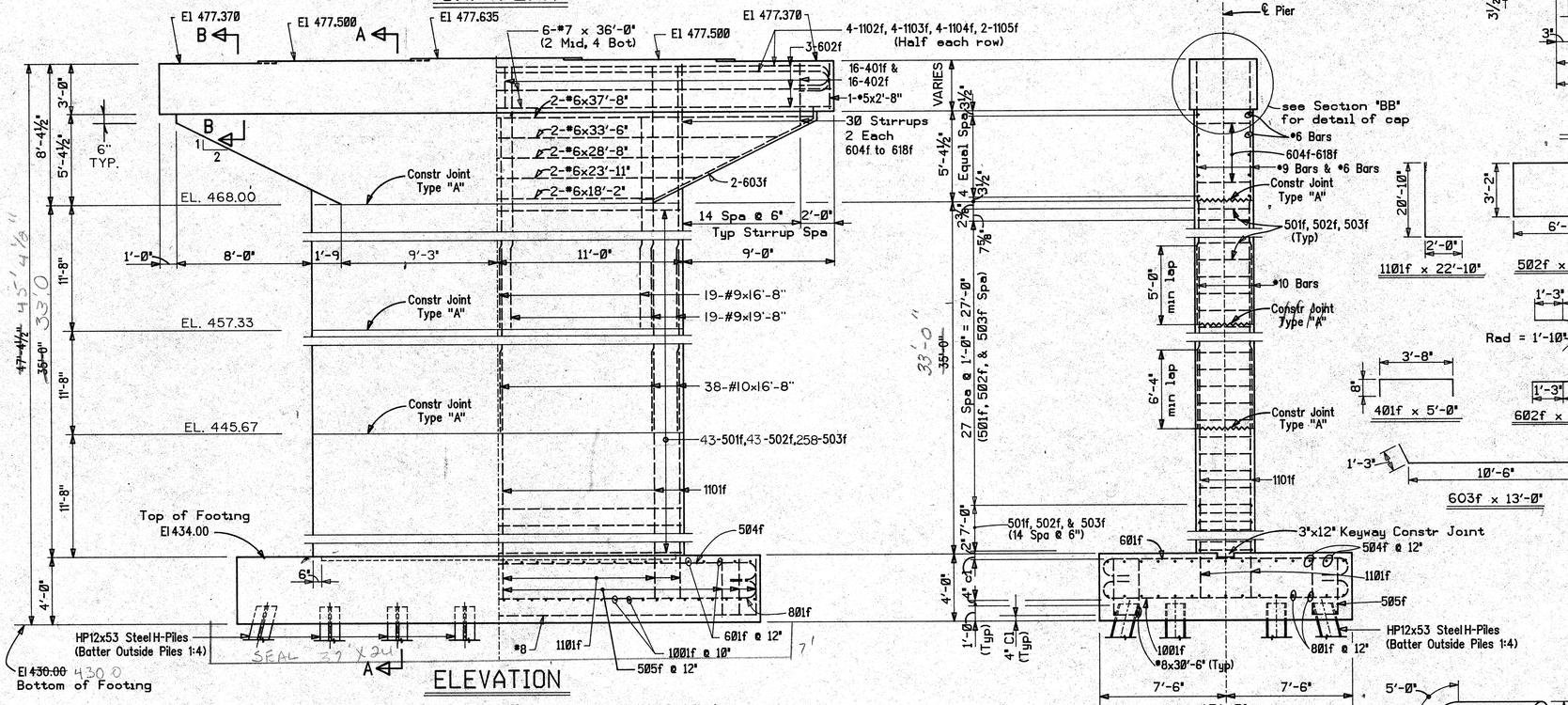

ELEVATION

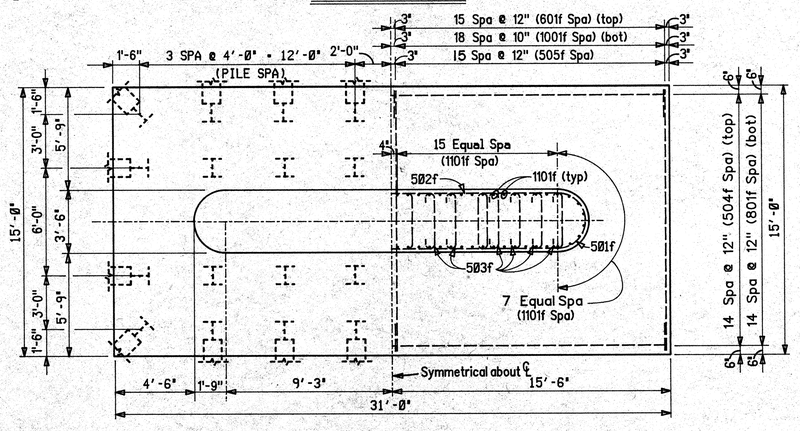

FOOTING PLAN

Left side shows concrete dimensions and pile spacing

Right side shows reinforcing steel

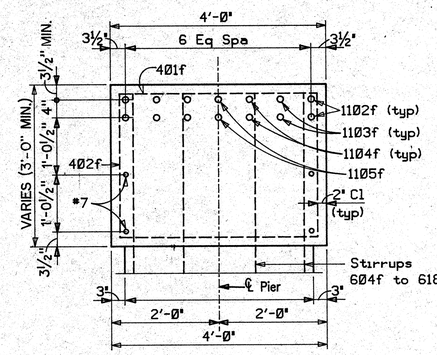

SECTION "BB"

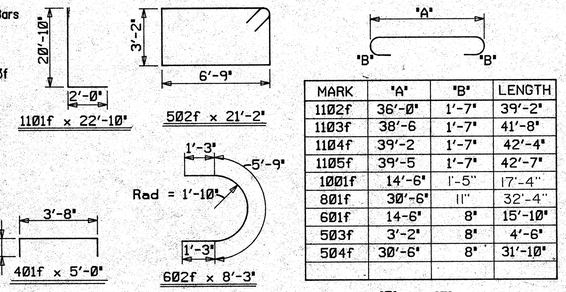

MARK	"A"	"B"	LENGTH
1102f	36'-0"	1'-7"	39'-2"
1103f	38'-6	1'-7"	41'-8"
1104f	39'-2	1'-7"	42'-4"
1105f	39'-5	1'-7"	42'-7"
1001f	14'-6"	1'-5"	17'-4"
801f	30'-6"	11"	32'-4"
601f	14-6"	8"	15'-10"
503f	3'-2"	8"	4'-6"
504f	30'-6"	8"	31'-10"

MARK	"C"	"D"	"E"	LENGTH
604f	2'-4"	3'-8"	1'-0"	11'-8"
605f	2'-4"	3'-11"	1'-0"	12'-2"
606f	2'-4"	4'-2"	1'-0"	12'-8"
607f	2'-4"	4'-5"	1'-0"	13'-2"
608f	2'-4"	4'-8"	1'-0"	13'-8"
609f	2'-4"	4'-11"	1'-0"	14'-2"
610f	2'-4"	5'-2"	1'-0"	14'-8"
611f	2'-4"	5'-5"	1'-0"	15'-2"
612f	2'-4"	5'-8"	1'-0"	15'-8"
613f	2'-4"	5'-11"	1'-0"	16'-2"
614f	2'-4"	6'-2"	1'-0"	16'-8"
615f	2'-4"	6'-5"	1'-0"	17'-2"
616f	2'-4"	6'-8"	1'-0"	17'-8"
617f	2'-4"	6'-11"	1'-0"	18'-2"
618f	2'-4"	7'-2"	1'-0"	18'-8"
505f	1'-6"	3'-4"	0"	8'-2"
402f	3'-8"	2'-8"	8"	10'-4"

Notes:
For Reinforcing Bar Notes, see Bridge Standard C1.
See Bottom Bearing Plate Detail for Anchor Bolt Spacing

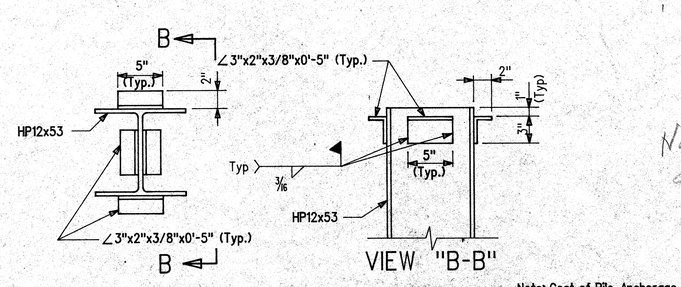

PILE ANCHORAGE DETAIL

Scale: ½" = 1"

VIEW "B-B"

Note: Cost of Pile Anchorage to be included in the cost of piling.

BILL OF MATERIALS

REINFORCING STEEL			
SIZE OR MARK	NO OF BARS	LENGTH	WEIGHT (lbs)
1101f	76	22'-10"	
1102f	4	39'-2"	
1103f	4	41'-8"	
1104f	4	42'-4"	
1105f	2	42'-7"	
	Total	No 11	12290
1001f	38	17'-4"	"
*10	76	16'-8"	
	Total	No 10	8285
*9	38	19'-8"	
*9	38	16'-8"	
	Total	No 9	4694
801f	15	32'-4"	
*8	4	30'-6"	
	Total	No 8	1621
*7	4	36'-0"	
	Total	No 7	294
601f	32	15'-10"	
602f	6	8'-3"	
603f	4	13'-0"	
604f	4	11'-8"	
605f	4	12'-2"	
606f	4	12'-8"	
607f	4	13'-2"	
608f	4	13'-8"	
609f	4	14'-2"	
610f	4	14'-8"	
611f	4	15'-2"	
612f	4	15'-8"	
613f	4	16'-2"	
614f	4	16'-8"	
615f	4	17'-2"	
616f	4	17'-8"	
617f	4	18'-2"	
618f	4	18'-8"	
*6	2	37'-8"	
*6	2	33'-6"	
*6	2	28'-8"	
*6	2	23'-11"	
*6	2	18'-2"	
	Total	No 6	
501f	86	17'-10"	2,707
502f	86	21'-2"	
503f	516	4'-6"	
504f	15	31'-10"	
505f	64	8'-2"	
*5	2	2'-8"	
	Total	No 5	6,969
401f	32	5'-0"	
402f	32	10'-4"	
	Total	No 4	328
Total Reinforcing Steel			37,188
Surface Seal			200 SFT
MISCELLANEOUS			
HP12x53 Steel H-Piles (32x16)			512 Lft
1"x15" Steel Anchor Bolts w/ Flat Washer & Hex-Nut			20 Ea.
CONCRETE			
Class "B" in Footing			68.9 CYS
Class "B" above Footing			~~96.4 CYS~~ 93.9
Class "A"			38.6 CYS

CONCRETE FOUNDATION SEAL: 22.6 CYD

PIER No 5 EBL DETAILS

Note changes

INDIANA DEPARTMENT OF TRANSPORTATION
VIGO COUNTY

SCALE:- 1/4" = 1'-0" Unless Noted DATE:- 19

DESIGNED HE/SAQ C'K'D NKB
DRAWN MAH C'K'D NKB
TRACED C'K'D

DRAWING:- S25 OF 37 SHEET:- 50 OF 92
PROJECT:- M-T610(1)
BRIDGE CONTRACT NO. B-18969
BRIDGE FILE:- 40-84-7279

HENRY C. RHEE REGISTERED No. 12692 STATE OF INDIANA PROFESSIONAL ENGINEER

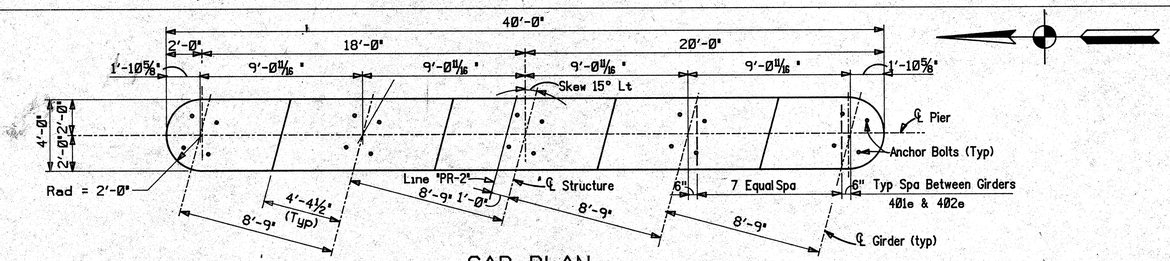

CAP PLAN

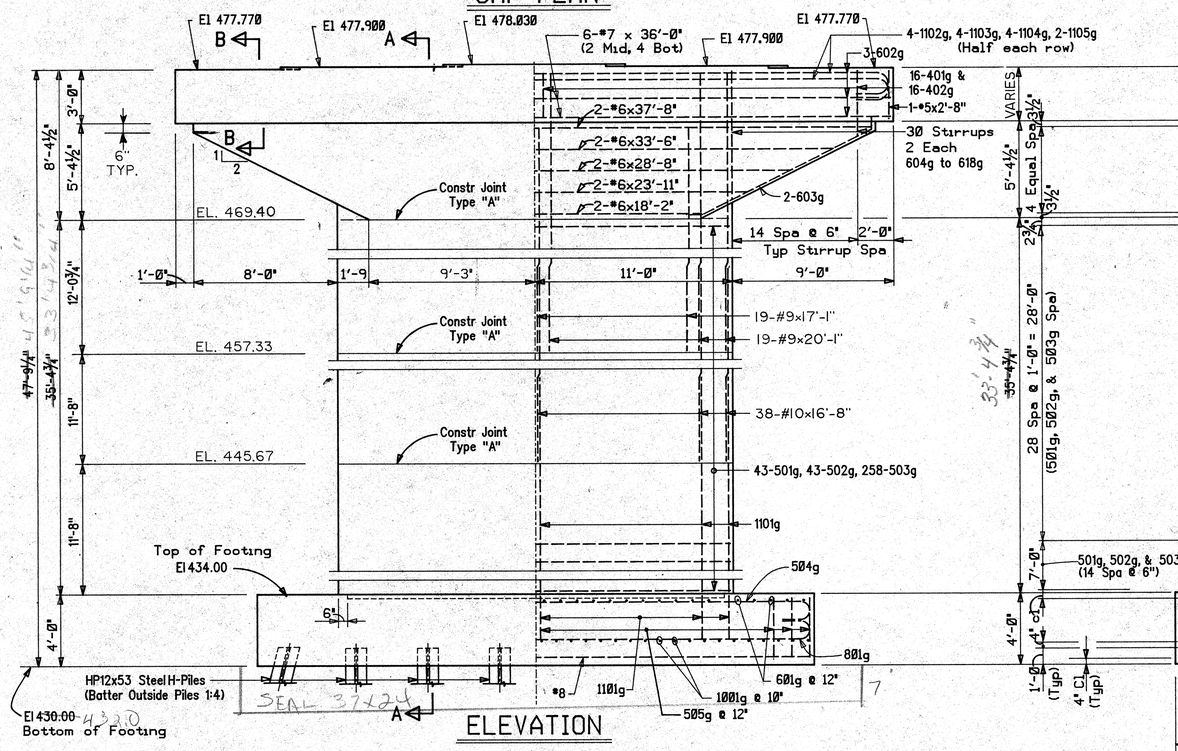

ELEVATION

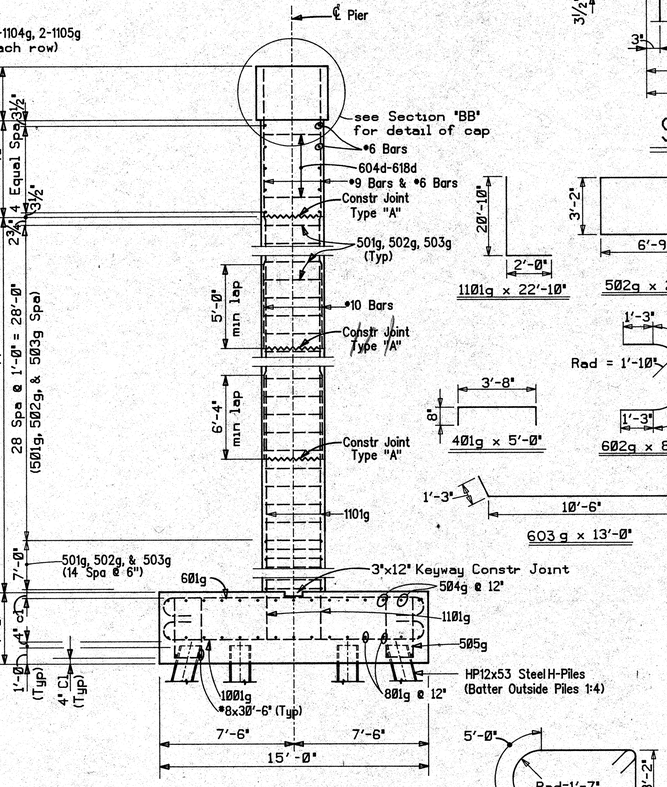

SECTION "AA"

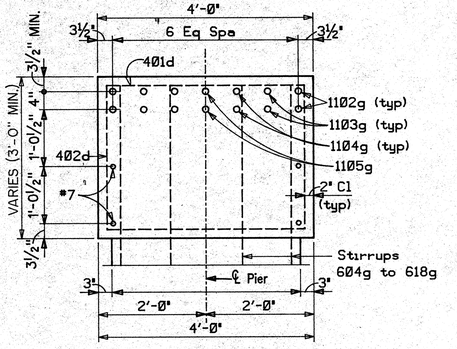

SECTION "BB"

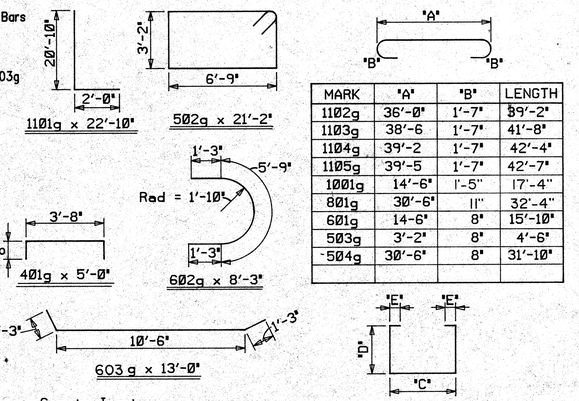

MARK	"A"	"B"	LENGTH
1102g	36'-0"	1'-7"	39'-2"
1103g	38'-6	1'-7"	41'-8"
1104g	39'-2	1'-7"	42'-4"
1105g	39'-5	1'-7"	42'-7"
1001g	14'-6"	1'-5"	17'-4"
801g	30'-6"	11"	32'-4"
601g	14-6"	8"	15'-10"
503g	3'-2"	8"	4'-6"
504g	30'-6"	8"	31'-10"

MARK	"C"	"D"	"E"	LENGTH
604g	2'-4"	3'-8"	1'-0"	11'-8"
605g	2'-4"	3'-11"	1'-0"	12'-2"
606g	2'-4"	4'-2"	1'-0"	12'-8"
607g	2'-4"	4'-5"	1'-0"	13'-2"
608g	2'-4"	4'-8"	1'-0"	13'-8"
609g	2'-4"	4'-11"	1'-0"	14'-2"
610g	2'-4"	5'-2"	1'-0"	14'-8"
611g	2'-4"	5'-5"	1'-0"	15'-2"
612g	2'-4"	5'-8"	1'-0"	15'-8"
613g	2'-4"	5'-11"	1'-0"	16'-2"
614g	2'-4"	6'-2"	1'-0"	16'-8"
615g	2'-4"	6'-5"	1'-0"	17'-2"
616g	2'-4"	6'-8"	1'-0"	17'-8"
617g	2'-4"	6'-11"	1'-0"	18'-2"
618g	2'-4"	7'-2"	1'-0"	18'-8"
505g	1'-6"	3'-4"	0"	8'-2"
402g	3'-8"	2'-8"	8"	10'-4"

Notes:
For Reinforcing Bar Notes, see Bridge Standard C1.
See Bottom Bearing Plate Detail for Anchor Bolt Spacing

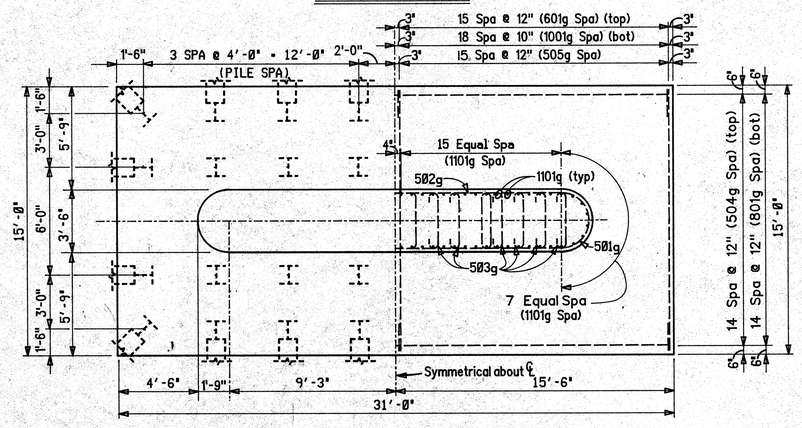

FOOTING PLAN

Left side shows concrete dimensions and pile spacing

Right side shows reinforcing steel

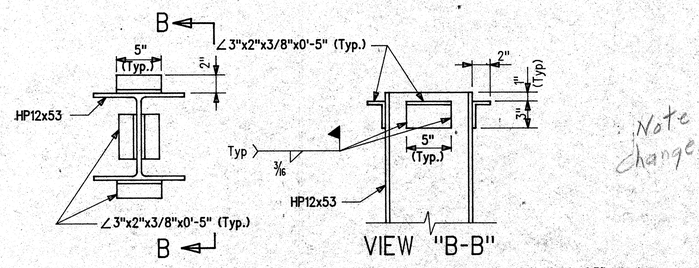

PILE ANCHORAGE DETAIL

Scale: ½" = 1"

Note: Cost of Pile Anchorage to be included in the cost of piling.

BILL OF MATERIALS

REINFORCING STEEL			
SIZE OR MARK	NO OF BARS	LENGTH	WEIGHT (lbs)
1101g	76	22'-10"	
1102g	4	39'-2"	
1103g	4	41'-8"	
1104g	4	42'-4"	
1105g	2	42'-7"	
	Total	No 11	12290
1001g	38	17'-4"	
#10	76	16'-8"	
	Total	No 10	8285
#9	38	20'-1"	
#9	38	17'-1"	
	Total	No 9	4802
801g	15	32'-4"	
#8	4	30'-6"	
	Total	No 8	1621
#7	4	36'-0"	
	Total	No 7	294
601g	32	15'-10"	
602g	6	8'-3"	
603g	4	13'-0"	
604g	4	11'-8"	
605g	4	12'-2"	
606g	4	12'-8"	
607g	4	13'-2"	
608g	4	13'-8"	
609g	4	14'-2"	
610g	4	14'-8"	
611g	4	15'-2"	
612g	4	15'-8"	
613g	4	16'-2"	
614g	4	16'-8"	
615g	4	17'-2"	
616g	4	17'-8"	
617g	4	18'-2"	
618g	4	18'-8"	
#6	2	37'-8"	
#6	2	33'-6"	
#6	2	28'-8"	
#6	2	23'-11"	
#6	2	18'-2"	
	Total	No 6	2,707
501g	86	17'-10"	
502g	86	21'-2"	
503g	516	4'-6"	
504g	15	31'-10"	
505g	64	8'-2"	
#5	2	2'-8"	
	Total	No 5	6,969
401g	32	5'-0"	
402g	32	10'-4"	
	Total	No 4	328
Total Reinforcing Steel			37,296
Surface Seal			200 SFT
MISCELLANEOUS			
HP12x53 Steel H-Piles (32x16)			512 Lft
1"x15" Steel Anchor Bolts w/ Flat Washer & Hex-Nut			20 Ea.
Class "B" in Footing			68.9 CYS
Class "B" above Footing			~~97.5~~ CYS
Class "A"			38.6 CYS

92.0 CYDS

CONCRETE FOUNDATION SEAL-2246

Note changes

PIER No 6 EBL DETAILS

INDIANA DEPARTMENT OF TRANSPORTATION

VIGO COUNTY

SCALE:- ¼" = 1'-0" Unless Noted DATE:- 19

DESIGNED HLZ/SAG C'K'D NKB
DRAWN MAH C'K'D NKB
TRACED C'K'D

DRAWING:- S26 OF 37 SHEET:- 51 OF 92
PROJECT:- M-T610(1)
BRIDGE CONTRACT NO. B-18969
BRIDGE FILE:- 40-84-7279

HENRY C. RHEE REGISTERED No. 13692 STATE OF INDIANA PROFESSIONAL ENGINEER

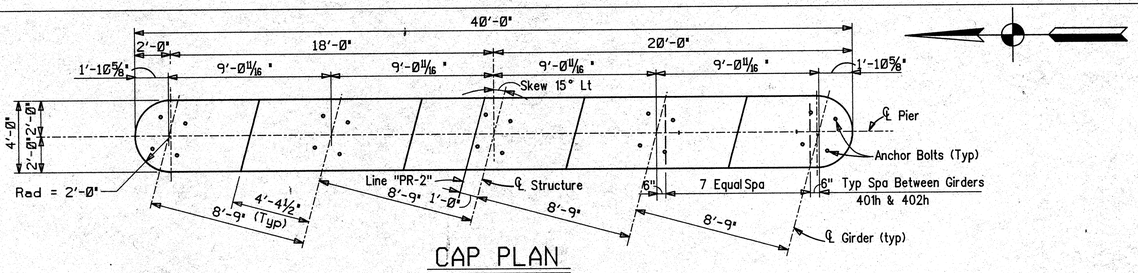

CAP PLAN

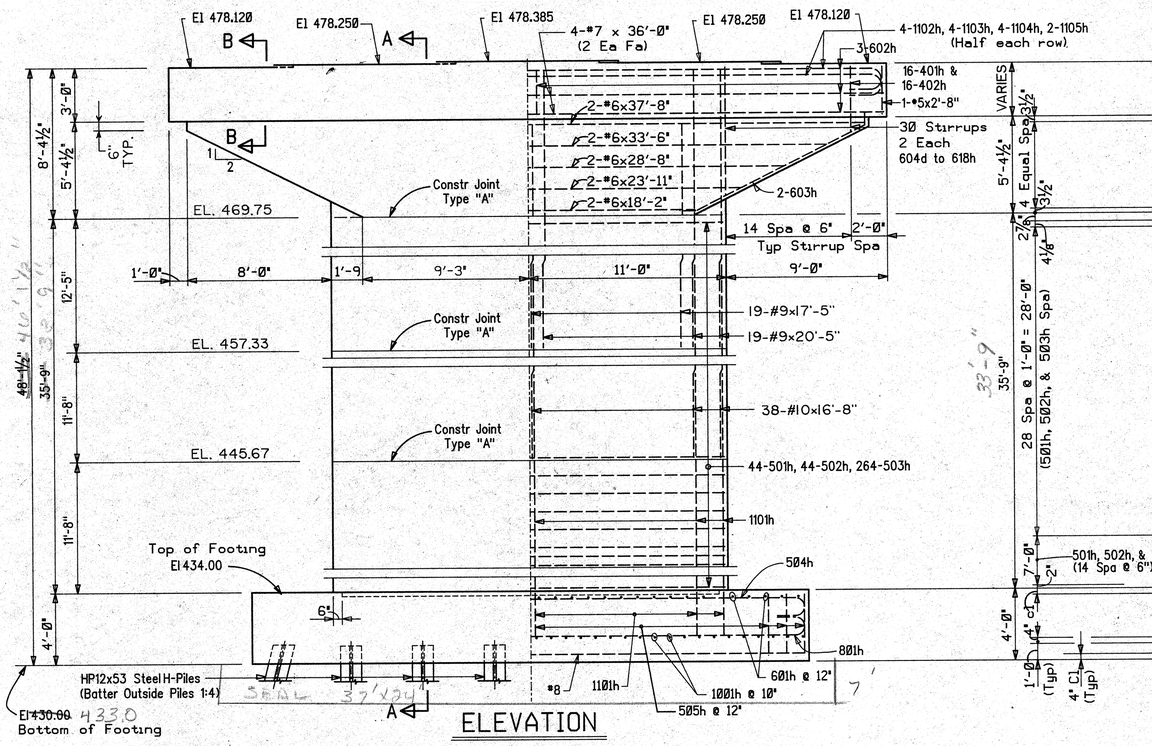

ELEVATION

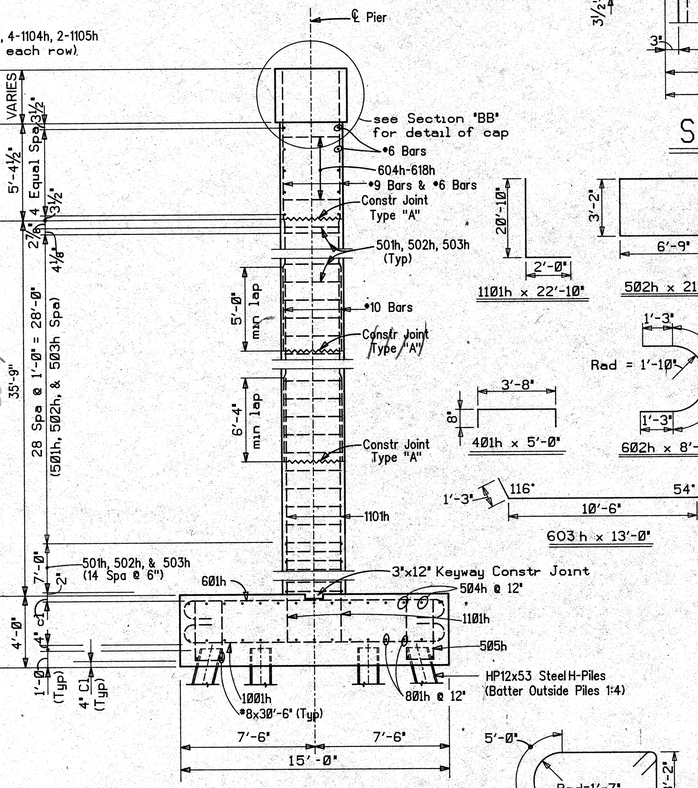

SECTION "AA"

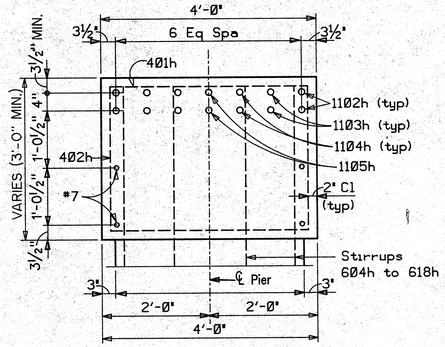

SECTION "BB"

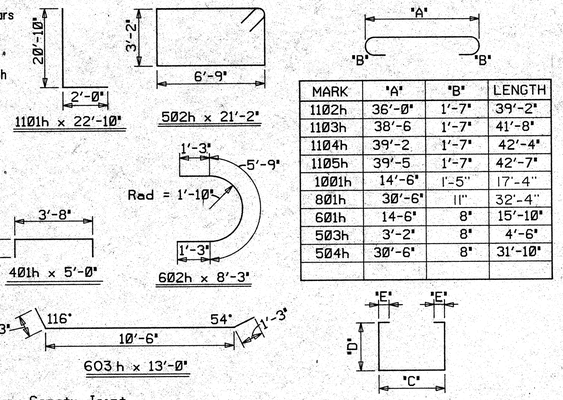

MARK	"A"	"B"	LENGTH
1102h	36'-0"	1'-7"	39'-2"
1103h	38'-6	1'-7"	41'-8"
1104h	39'-2	1'-7"	42'-4"
1105h	39'-5	1'-7"	42'-7"
1001h	14'-6"	1'-5"	17'-4"
801h	30'-6"	11"	32'-4"
601h	14-6"	8"	15'-10"
503h	3'-2"	8"	4'-6"
504h	30'-6"	8"	31'-10"

MARK	"C"	"D"	"E"	LENGTH
604h	2'-4"	3'-8"	1'-0"	11'-8"
605h	2'-4"	3'-11"	1'-0"	12'-2"
606h	2'-4"	4'-2"	1'-0"	12'-8"
607h	2'-4"	4'-5"	1'-0"	13'-2"
608h	2'-4"	4'-8"	1'-0"	13'-8"
609h	2'-4"	4'-11"	1'-0"	14'-2"
610h	2'-4"	5'-2"	1'-0"	14'-8"
611h	2'-4"	5'-5"	1'-0"	15'-2"
612h	2'-4"	5'-8"	1'-0"	15'-8"
613h	2'-4"	5'-11"	1'-0"	16'-2"
614h	2'-4"	6'-2"	1'-0"	16'-8"
615h	2'-4"	6'-5"	1'-0"	17'-2"
616h	2'-4"	6'-8"	1'-0"	17'-8"
617h	2'-4"	6'-11"	1'-0"	18'-2"
618h	2'-4"	7'-2"	1'-0"	18'-8"
505h	1'-6"	3'-4"	0"	8'-2"
402h	3'-8"	2'-8"	8"	10'-4"

501h x 17'-10"

Notes:
For Reinforcing Bar Notes, see Bridge Standard C1.
See Bottom Bearing Plate Detail for Anchor Bolt Spacing

BILL OF MATERIALS

REINFORCING STEEL

SIZE OR MARK	NO OF BARS	LENGTH	WEIGHT (lbs)
1101h	76	22'-10"	
1102h	4	39'-2"	
1103h	4	41'-8"	
1104h	4	42'-4"	
1105h	2	42'-7"	
	Total	No 11	12290
1001h	38	17'-4"	
#10	76	16'-8"	
	Total	No 10	8285
#9	38	20'-5"	
#9	38	17'-5"	
	Total	No 9	4888
801h	15	32'-4"	
#8	4	30'-6"	
	Total	No 8	1621
#7	4	36'-0"	
	Total	No 7	294
601h	32	15'-10"	
602h	6	8'-3"	
603h	4	13'-0"	
604h	4	11'-8"	
605h	4	12'-2"	
606h	4	12'-8"	
607h	4	13'-2"	
608h	4	13'-8"	
609h	4	14'-2"	
610h	4	14'-8"	
611h	4	15'-2"	
612h	4	15'-8"	
613h	4	16'-2"	
614h	4	16'-8"	
615h	4	17'-2"	
616h	4	17'-8"	
617h	4	18'-2"	
618h	4	18'-8"	
#6	2	37'-8"	
#6	2	33'-6"	
#6	2	28'-8"	
#6	2	23'-11"	
#6	2	18'-2"	
	Total	No 6	2,707
501h	88	17'-10"	
502h	88	21'-2"	
503h	528	4'-6"	
504h	15	31'-10"	
505h	64	8'-2"	
#5	2	2'-8"	
	Total	No 5	7,106
401h	32	5'-0"	
402d	32	10'-4"	
	Total	No 4	328
Total Reinforcing Steel			37,519
Surface Seal			200 SFT
MISCELLANEOUS			
HP12x53 Steel H-Piles (32x11)-			352 Lft
1"x15" Steel Anchor Bolts w/ Flat Washer & Hex-Nut			20 Ea.
CONCRETE			
Class "B" in Footing			68.9 CYS
Class "B" above Footing			98.5 CYS
Class "A"			38.6 CYS

93.0

CONCRETE FOUNDATION SEAL

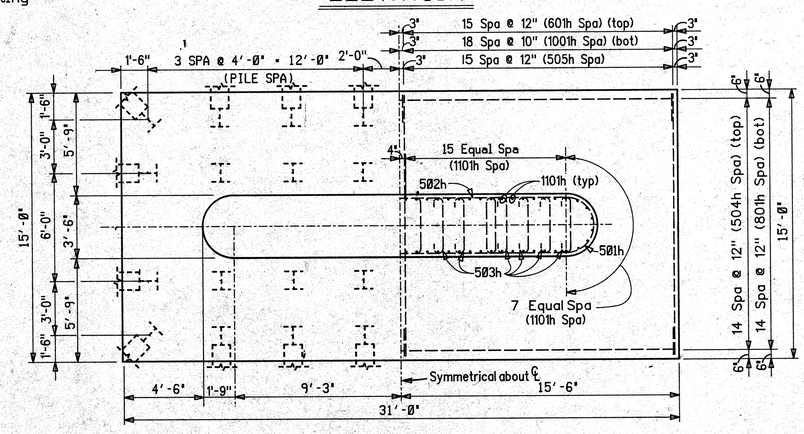

FOOTING PLAN

Left side shows concrete dimensions and pile spacing

Right side shows reinforcing steel

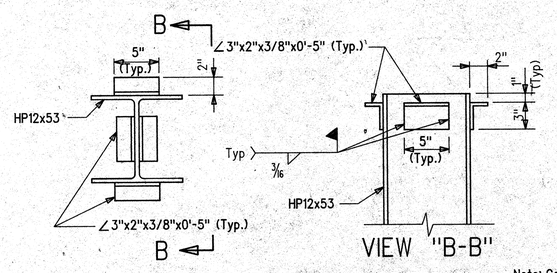

PILE ANCHORAGE DETAIL

Scale: ½" = 1"

Note: Cost of Pile Anchorage to be included in the cost of piling.

Note changes

PIER No 7 EBL DETAILS

INDIANA DEPARTMENT OF TRANSPORTATION

VIGO COUNTY

SCALE:- ¼" = 1'-0" Unless Noted DATE:- 19

DESIGNED HIZ/SRG C'K'D NKB
DRAWN MAH C'K'D NKB
TRACED ____ C'K'D ____

DRAWING:- S27 OF 37 SHEET:- 52 OF 92
PROJECT:- M-T610(1)
BRIDGE CONTRACT NO. B-18969
BRIDGE FILE:- 40-84-7279

HENRY C. RHEE REGISTERED No. 13692 STATE OF INDIANA PROFESSIONAL ENGINEER

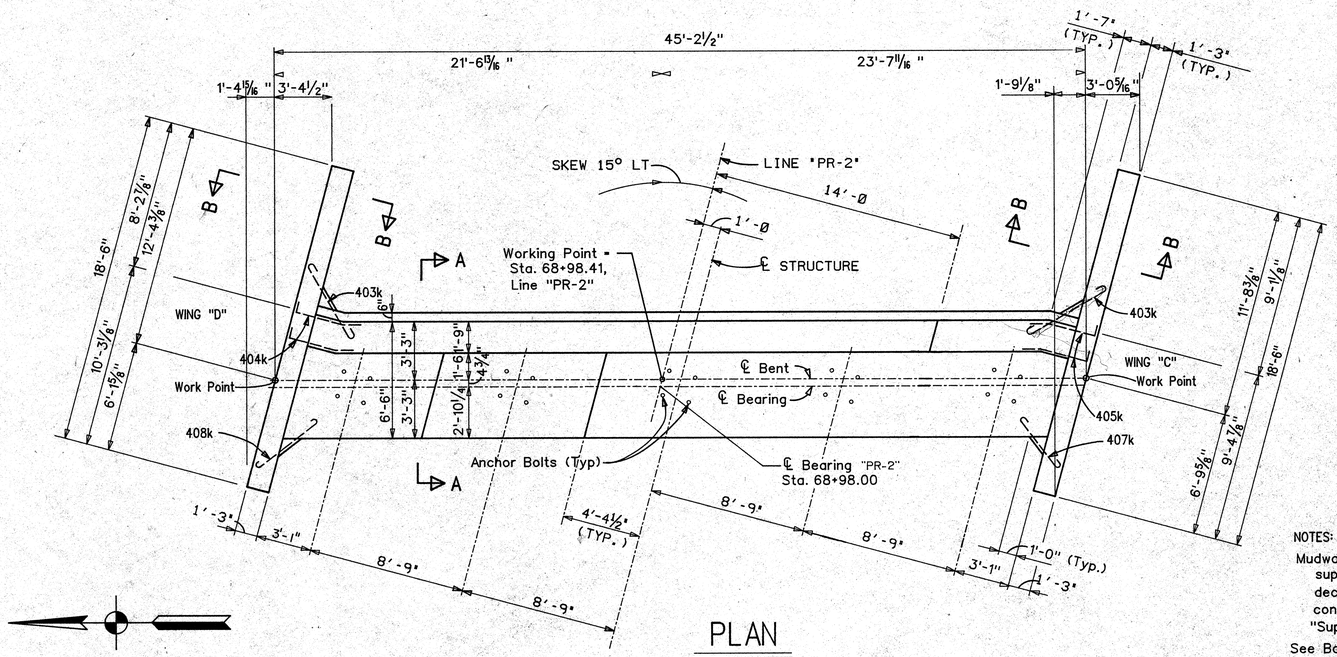

PLAN

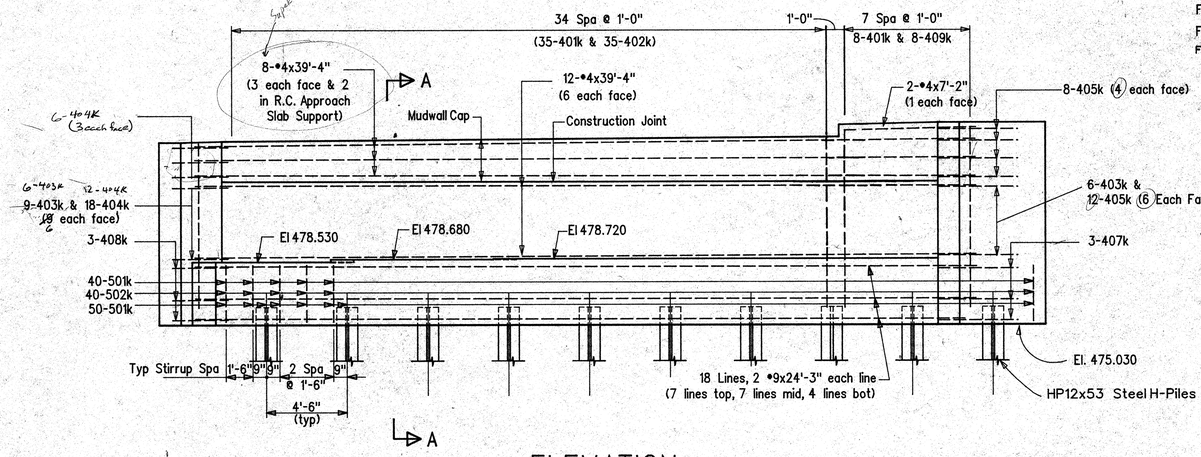

ELEVATION

NOTES:

Mudwall cap to be constructed with superstructure and to match bridge deck surface elevation. Quantities contained within cap included in "Superstruoture Quantities".

See Bottom Bearing Plate Detail For Anchor Bolt Spacing (Dwg. S35).

For Reinforcing Bar Notes, see Bridge Standard C1

For Constr Joint Type "A", see Bridge Standard C3

For Additional Details and Bill of Materials, see Dwg. S29.

FOR PILE ANCHORAGE DETAIL SEE DRAWING S27.

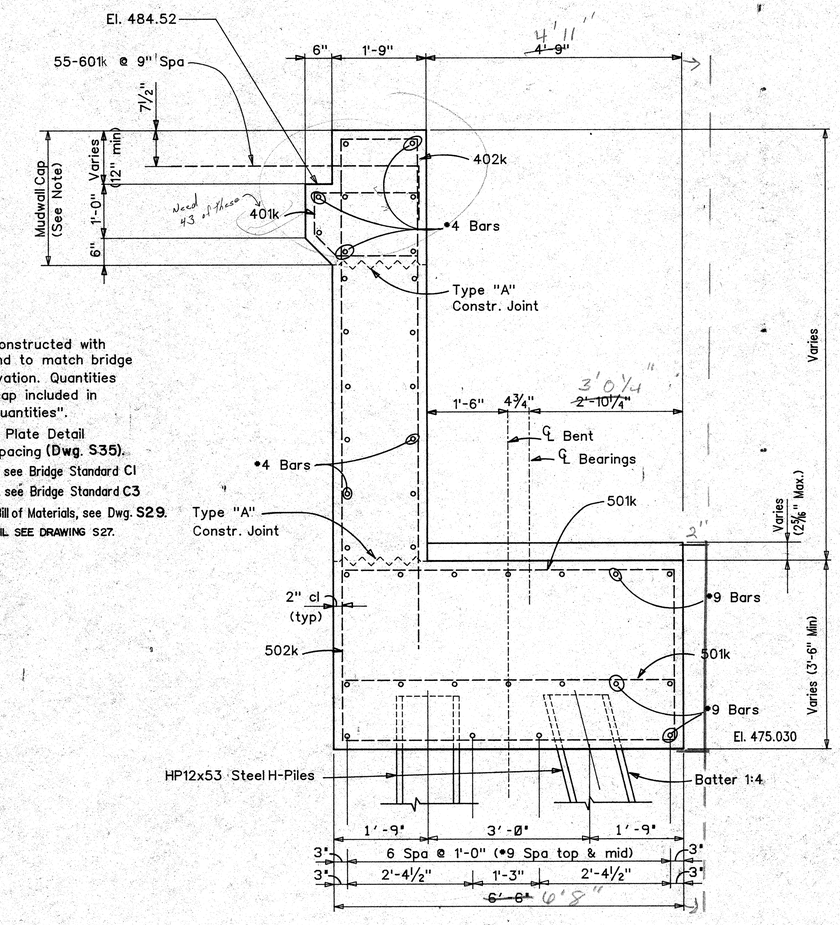

SECTION "A-A"

Scale: ¾" = 1'-0"

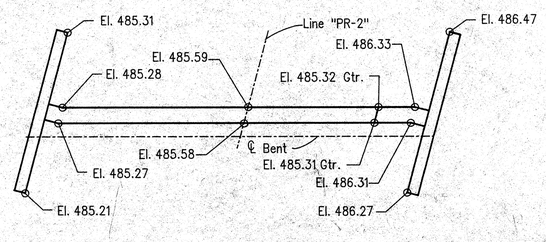

END BENT No. 8 EBL ELEVATIONS DIAGRAM

Scale: ⅛" = 1'-0"

END BENT No 8 EBL DETAILS

INDIANA DEPARTMENT OF TRANSPORTATION

VIGO COUNTY

SCALE:- ¼" = 1'-0" Unless Noted DATE:- 19

DESIGNED WZ/DGP C'K'D HKB
DRAWN MAA C'K'D HKB
TRACED C'K'D

DRAWING:- S28 OF 37 SHEET:- 53 OF 92
PROJECT:- M-T610(1)
BRIDGE CONTRACT NO. B-18969
BRIDGE FILE:- 40-84-7279

HENRY C. RHEE No. 13692 STATE OF INDIANA PROFESSIONAL ENGINEER

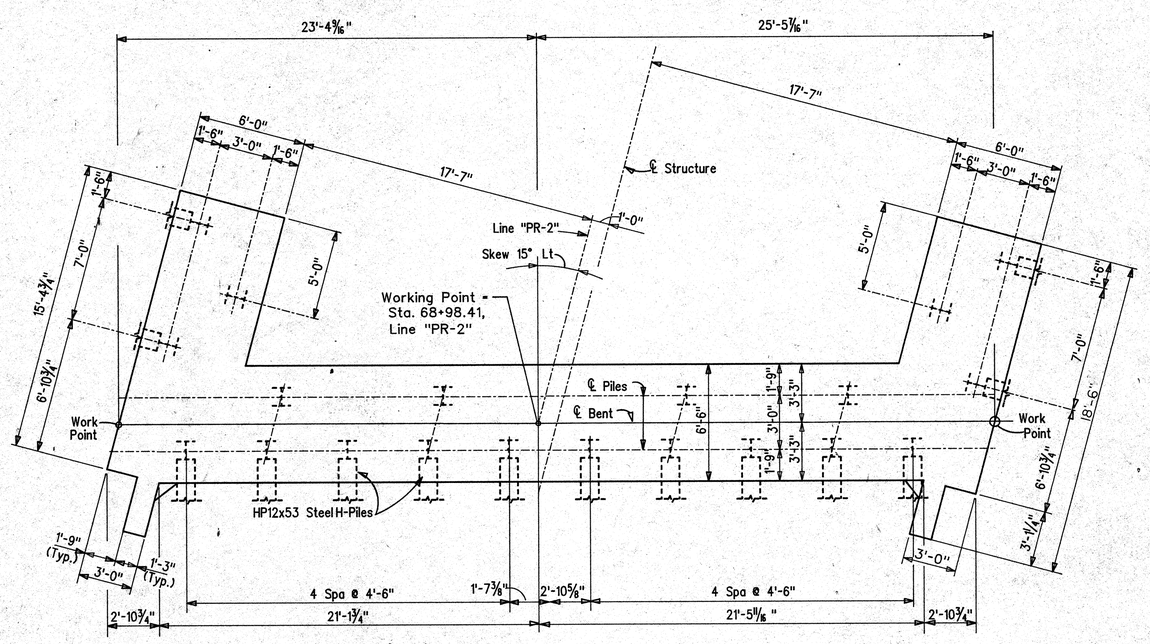

FOOTING PLAN

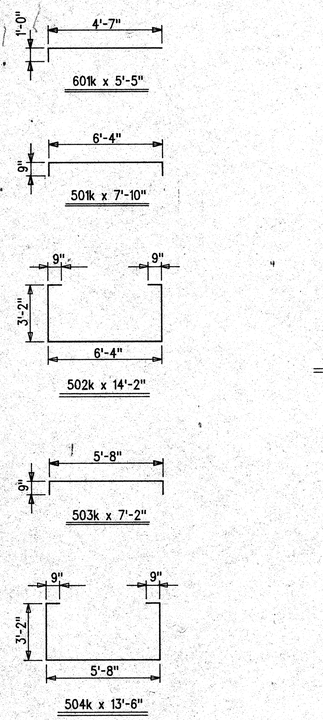

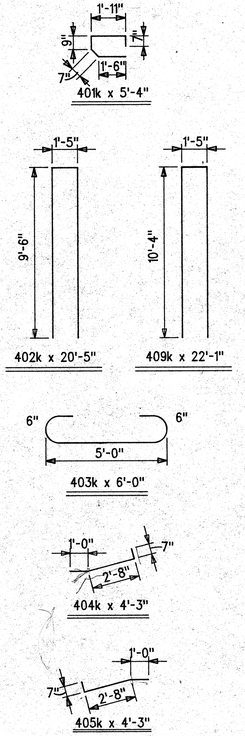

BILL OF MATERIALS

REINFORCING STEEL			
SIZE OR MARK	NO OF BARS	LENGTH	WEIGHT (lbs)
✓ •9	36	24'-3"	2964
✓ •9	28	15'-0"	1428
	Total No. 9		4396 ✓
✓ 501k	90	7'-10"	735
✓ 502k	40	14'-2"	591
✓ 503k	48	7'-2"	358
✓ 504k	24	13'-6"	338
✓ •5	6	10'-9"	67
✓ •5	6	9'-10"	62
✓ •5	32	10'-3"	342
✓ •5	32	9'-0"	300
	Total No 5		2794 ✓
✓ 402k	35	20'-5"	477
✓ 403k	12	6'-3"	80
✓ 404k	20	4'-3"	57
✓ 405k	18	4'-3"	51
✓ 407k	3	4'-4"	9
✓ 408k	3	5'-2"	10
✓ 409k	8	22'-0"	176
✓ •4	12	39'-4"	315
✓ •4	36	18'-2"	437
✓ •4	16	4'-6"	48
✓ •4	2	7'-2"	10
	Total No 4		1582 ✓
Total Epoxy Coated Reinf Steel			8772 ✓
CONCRETE			
Class "A"			81.7 Cys
MISCELLANEOUS			
Surface Seal (Estimated Quantity)			600 Sft
HP12x53 Steel H-Piles (20x 46.1)			922. Lft
1"x15" Steel Anchor Bolts w/ Flat			
Washers and Hex-Nuts			20 Each

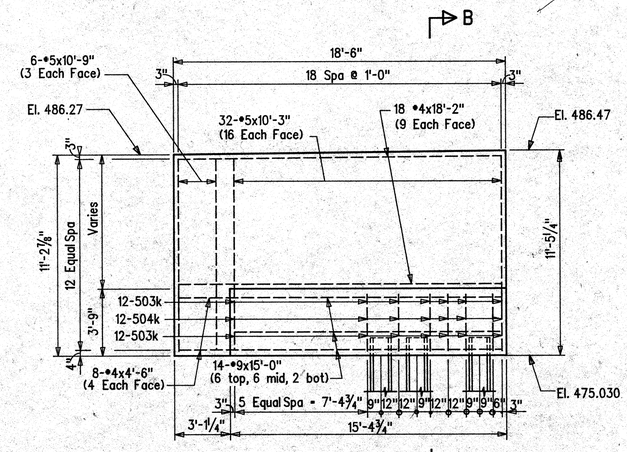

WING "C"

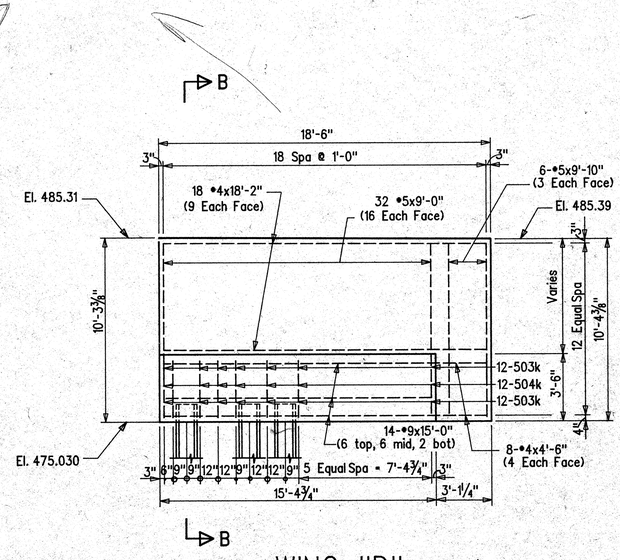

WING "D"

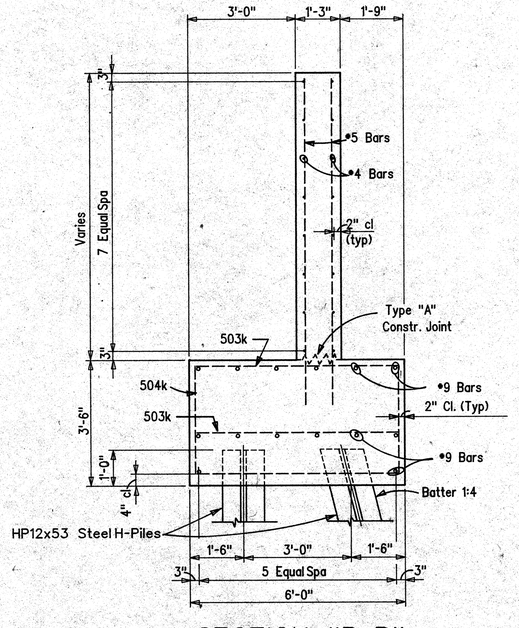

SECTION "B-B"

Scale: ½" = 1'-0"

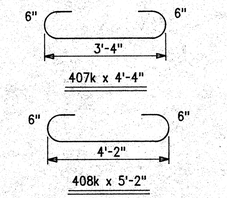

NOTES:
For Reinforcing Bar Notes, see Bridge Standard C1
For Constr Joint Type "A", see Bridge Standard C3
For Additional Details, see Dwg. S28.

END BENT No 8 EBL DETAILS

INDIANA DEPARTMENT OF TRANSPORTATION
VIGO COUNTY

SCALE:- ¼" = 1'-0" Unless Noted DATE:- 19

DESIGNED HTDAP C'K'D NKB
DRAWN MAH C'K'D NKB
TRACED C'K'D

DRAWING:- S29 OF 37 SHEET:- 54 OF 92
PROJECT:- M-T610(1)
BRIDGE CONTRACT NO. B-18969
BRIDGE FILE:- 40-84-7279

HENRY C. RHEE REGISTERED No. 13692 STATE OF INDIANA PROFESSIONAL ENGINEER

883'-0 O. to O. Floor Slab

105'-0" C. to C. | 130'-0" C. to C. | 130'-0" C. to C. | 150'-0" C. to C.

55 60lb @ Bent No. 1
55 60lk @ Bent No. 8
(SEE BENT DETAIL SHEETS S20 & S28)

℄ Bent No. 1 or No 8 **Bearing**

℄ Pier No. 2 or No. 7

℄ Pier No. 3 or No. 6

℄ Pier No. 4 or No. 5

Coping

28'-3" | 30'-3" | 28'-2" | 28'-10" | 36'-8" | 30'-7"

54 Spa. @ 6'-9" = 40'-0"

Modular Expansion Joint

℄ Structure ℄ Line "PR-2"

Face of Railing

33 Lines, 23-#5 x 39'-11", Ea. Line (Top Slab), ~~1'-10"~~ 1'-5" Min. Lap.

60 Lines 23-#5 x 39'-11" Ea. Line (Bot. Slab) ~~1'-10"~~ Min. Lap. 1'-5"

1760 Lines 2-#6x22'-6" Each Line (Top & Bot. Slab) 1'-10" Min. Lap

Symm. about ℄ Structure except for roadway drains.

Roadway

41'-0 O. to O. Coping

32'-0 Clear

D

3-#5x7'-8" Between Girders

32 Lines 2-#5x39'-6" Each Line (Top Slab) ~~1'-10"~~ 1'-5" Min. Lap

32 Lines, 2-#6x30'-2" Each Line (Top Slab) 1'-10" Min. Lap @ Piers № 2 & 7

32 Lines 2-~~#6~~ #5 x 39'-1" (Top Slab) ~~1'-10"~~ 1'-5" Min Lap

32 Lines, 2-#6x29'-5" Each Line (Top Slab) 1'-10" Min Lap @ Pier Nos. 3 or 6

32 Lines, 2-#5x35'-0" Ea Line (Top Slab) ~~1'-10"~~ 1'-5" Min Lap

32 Lines, 2-#6x34'-7" Ea. Line (Top Slab) 1'-10" Min. Lap @ Pier Nos. 4 or 5

32 Lines, 3-#5x32'-5" Each Line (Top Slab) ~~1'-10"~~ 1'-5" Min. Lap.

Edge of Sidewalk

44 Spa. @ 1'-0" (Max.) Measured On Skew

42'-5½"

8 502a Spa @ 1'-0" Between Girders

880-501a (Top Sidewalk)

Face of Railing

8 Lines 23-#5x39'-11" Ea. Line (Top of Sidewalk ~~1'-10"~~ 1'-5" Min. Lap

Coping

3" (Typ.)
43 40lb @ Bent No. 1
43 40lk @ Bent No. 8
(SEE BENT DETAIL SHEETS S20 & S28)

Roadway Drains TYPE "SQ-A", (Typ.)
For spacing SEE DWG. S18
For details SEE DWG. S36

C

℄ Bent

Notch for Modular Joint

1'-8" | 2'-0"

End of Floor Slab

1'-6"

4⅞" | 9⅜" | 2¼"

PLAN

Scale 1/16" = 1'-0 Horizontal
3/16" = 1'-0 Vertical

36"x24"x8" Handhole & 6-4" Dia. P.V.C. Conduit

Masonry Coating Limits (Typ.)

41'-0 O. to O. Coping
32'-0 Clear Roadway
Line "PR-2"

1'-6 | 6'-0 | 2'-0 | 12'-0 Lane | 7 Spa. @ 1'-3" = 8'-9" | 12'-0 Lane | 6'-0 | 1'-6

Spa. #5 in Top Slab
~~Spa. #5 in Top Slab~~ ~~S2~~

~~S4,56,58~~ 7 Spa @ 1'-3 = 8'-9 | 7½" 6 Spa. @ 1'-3" = 7'-6" | 7½" | 1'-0 | 7½" 6 Spa. @ 1'-3" = 7'-6" | 7½"

~~S2~~ Spa. #5 in Top Slab
~~S3, 55, 57, 59~~ Spa. #6 in Top Slab

℄ Structure
Profile Grade

Roadway Drain Type SQ-A (Typ)

Slope 3/16" /Ft. ** | Slope 3/16" /Ft. **

Concrete Barrier Railing

Special Pedestrian Concrete Barrier Railing

Surface Seal Limits (Typ)

2" Clr. (Typ)

Slope ¼" /Ft.

~~S2~~ #5 @ 12" O.C.

501a @ 12" O.C.

~~S2~~ 12 Spa. @ 7½" = 7-6

~~S1~~ #6 @ 22'-6"

~~S2~~ 12 Spa. @ 7½" = 7'-6"

9" Slab

¾" Half Round Drip Bead

"Coping Jacks Will Not Be allowed on these Structures."

Type A Constr. Joint

¾" ø U-Bolts

R 6"x9"x⅜" (typ)

¾" ø Bolts (typ)

2" Clr. (TYP)

~~S2~~ 3 Spa. @ 7½" = 1'-10½" (TYP)

¼" Typ.

TYP. AT PIERS

TYP. BETWEEN PIERS

L 4"x4"x⅜"x8'-6"

11½" | 3'-0 | 6" (Typ) | 6" (Typ) | 3'-0

4 Spa. @ 8'-9 = 35'-0

SECTION C-C

Scale: ⅜" = 1'-0

CORNER DETAILS

Scale ⅜" = 1'-0

BEAM HAUNCH DETAIL

No Scale

9" Class "C" Conc. Slab

2¼"

4" (±1") Typ.

Note:
See Bridge Std. C1 for Reinforcing Bar Notes.
See Bridge Std. C3 for Constr. Jt. Type "A".
For Details of Section DD, See Drwg. S15
For Bill of Materials, see Dwg. S36
See Bridge Std. D for Roadway Drain Details.
The top reinforcing in the deck shall be securely tied down to the deck forms and/or the girders to prevent lifting during concrete placement.
Permanent metal deck forms may be substituted for removable forms on this structure.
After structural steel has been erected, concrete forms shall not be blocked against the expansion end of the steel in making any pours adjacent to the steel spans.
All reinforcing steel in the bridge slab to be epoxy coated. Areas of coating damaged during fabrication or handling in field shall be repaired with material compatible with coating applied by the manufacturer.

FLOOR DETAILS EBL

INDIANA DEPARTMENT OF ~~HIGHWAYS~~ TRANSPORTATION

VIGO COUNTY

SCALE:— As Noted DATE:— 19

DRAWING:- S30 OF 37 SHEET:- 55 OF 92

PROJECT:- M-T610(I)

BRIDGE CONTRACT NO. B-18969

BRIDGE FILE:- 40-84-7279

HENRY C. RHEE — REGISTERED — No. 13692 — STATE OF INDIANA — PROFESSIONAL ENGINEER

DESIGNED	D&P	C'K'D	J G
DRAWN	RWA	C'K'D	J G
TRACED		C'K'D	

SF-22317

** Slope Varies in Spans A, B and C (See Superelevation Diagrams, Sht. No. 5 and 6)

Revised 8-23-91: Min. Lap & Bar Size, Sec. B-B, Corner Details
Revised 1-4-91: Added Beam Haunch Detail

TP101

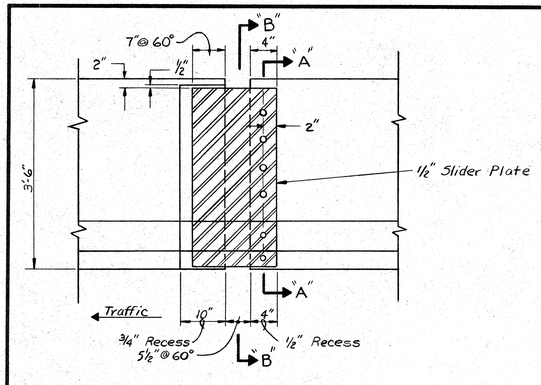

SIDEWALK RAILING
SCALE: ¾" = 1'-0"

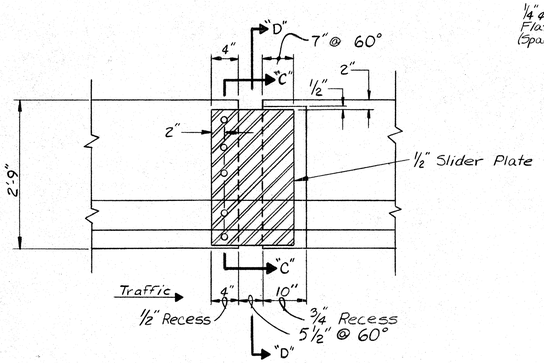

ROADWAY RAILING
SCALE: ¾" = 1'-0"

SLIDER PLATE DETAILS

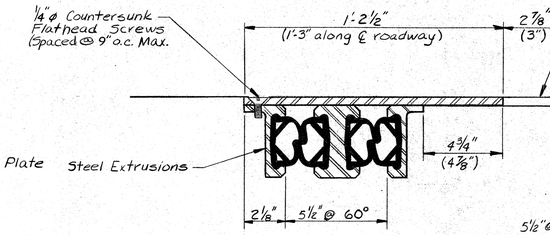

SECTION "E-E"
SCALE: 3"=1'-0"

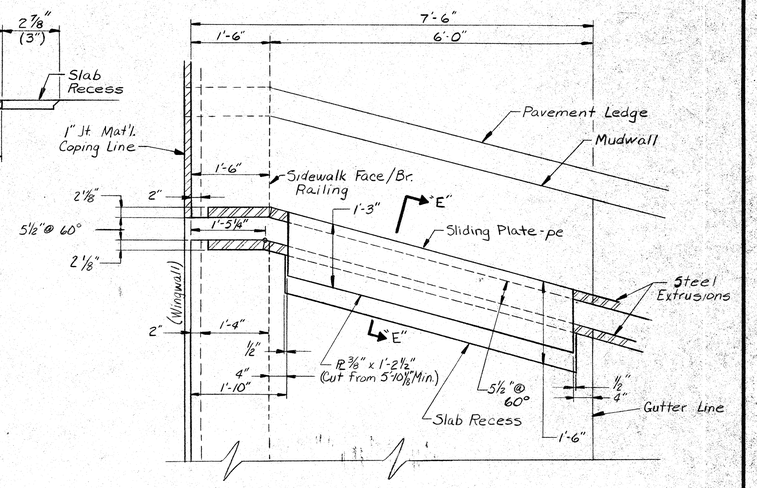

W.B.L. - N.E. CORNER
(E.B.L.-S.E. OPPOSITE HAND)
SCALE: ¾" = 1'-0"

SECTION "A-A"
SCALE: ¾"=1'-0"

SECTION "C-C"
SCALE: ¾"=1'-0"

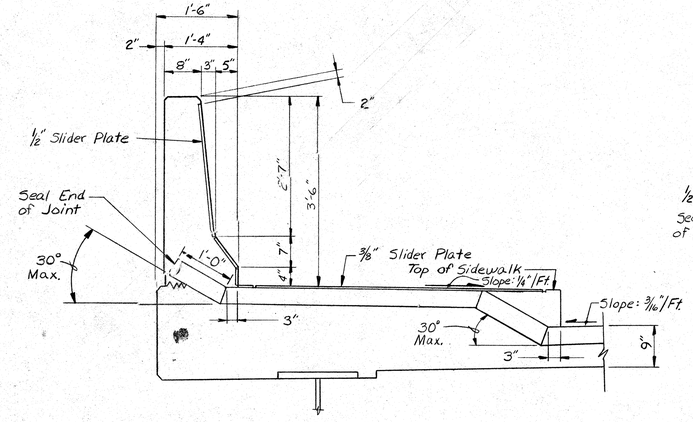

SECTION "B-B"
SCALE: ¾"=1'-0"

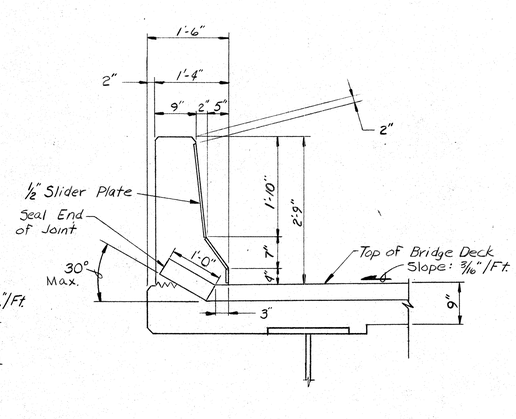

SECTION "D-D"
SCALE: ¾"=1'-0"

SLIDER PLATE PARTS LIST		
MARK	ITEM	QTY
pa	PL ½" x 3 5/16" x 16½"	8 pcs.
pb	PL ½" x 8⅞" x 16½"	8 pcs.
pc	PL ½" x 29⅛" x 16½"	4 pcs.
pd	PL ½" x 20 11/16" x 16½"	4 pcs.
pe	PL ⅜" x 14½" x 70⅛" MIN.	4 pcs.
ha	RICHMOND ½" ø LOOP INSERT	44 pcs.
hb	HEX SOCKET FLAT HEAD CAP SCREW	32 pcs.

W.B.L. - N.W. CORNER
(E.B.L.-S.W. OPPOSITE HAND)
SCALE: ¾" = 1'-0"

ADDITIONAL FLOOR DETAILS

INDIANA DEPARTMENT OF TRANSPORTATION

SCALE:— AS NOTED DATE:-

DESIGNED JG C'K'D HCR
DRAWN KMC C'K'D JG
TRACED C'K'D

SF-22317

REVISED 1-1-91 SHEET ADDED

DRAWING S30A OF 37 SHEET:- 55A OF 92
PROJECT:- M-T610(1) STATION:— 64+58
BRIDGE CONTRACT NO. B-18969
BRIDGE FILE:- 40-84-7279

19

HENRY C. RHEE — No. 13692 — STATE OF INDIANA — PROFESSIONAL ENGINEER

℄ Bent 1 Bearing — 105'-0" SPAN A C. TO C. Brg. — ℄ Pier 2 — 130'-0" SPAN B C. TO C. Brg. — ℄ Pier 3 — 130'-0" SPAN C C. TO C. Brg. — ℄ Pier 4 — 75'-0" SPAN D C. TO C. Brg. — Symm. About ℄ Struct.

Field Splice: 79'-6" | 52'-6" | 77'-6" | 51'-6" | 70'-0" | 62'-6" | 46'-6"

Cross Frames: 4 @ 8'-5" = 17'-6" | 1'-0" | 2 @ 8'-5" = 17'-6"

19'-9 15/16" | 2 @ 20'-0 | 22'-3" | 22'-11 1/16" | 22'-0 15/16" | 21'-9" | 2 @ 20'-0" | 23'-3" | 22'-11 1/16" | 19'-9 15/16" | 4 @ 21'-0" | 26'-2 1/16" | 23'-3 15/16" | 25'-6" | 25'-0" | 11'-2 1/16"

4 8 1/4"

℄ Splice 1 | ℄ Splice 2 | ℄ Splice 3 | ℄ Splice 4 | ℄ Splice 5 | ℄ Splice 6

Girder 1 | Girder 2 | Girder 3 | Girder 4 | Girder 5

35'-0"

PR-1

Intermediate Stiffners: 2'-3" | 2@6'-3" | 6'-8" | 12'-8" | 3@6'-0" | 3@6'-0" | 13'-0" | 7'-0" | 7'-0" | 13'-0" | 3@6'-0" | 2@7'-0" | 14'-0" | 7'-0" | 7'-0" | 13'-3" | 3@6'-3" | 3@6'-3" | 12'-6" | 2@6'-3" | 1'-2 1/16"

Cross Frames: 22'-2 1/16" | 2 @ 20'-0" | 22'-3" | 20'-6 15/16" | 24'-5 1/16" | 21'-9" | 2 @ 20'-0" | 23'-3" | 20'-6 15/16" | 22'-2 1/16" | 4 @ 21'-0" | 23'-9 15/16" | 25'-8 1/16" | 25'-6" | 25'-0

FRAMING PLAN-W.B.L.
SCALE : H=1/16", V=1/8"

Field Splice: 80'-4 1/4" | FS1 | 52'-6" | FS-2 | 77'-6" | FS-3 | 51'-6 | FS-4 | 70'-0" | FS-5 | 62'-6" | FS-6 | 93'-0"

Web Plate: 7/16" × 56" | 7/16" × 56" | 7/16" × 56" | 7/16" × 56" | 7/16" × 56" | 1/2" × 56" | 1/2" × 56"

Cross Frame Near Side G1, G2, G3, G4: 19'-9 15/16" | 20'-0 | 20'-0" | 22'-3" | 22'-11 1/16" | 22'-0 1/16" | 21'-9" | 20'-0" | 20'-0" | 23'-3" | 22'-11 1/16" | 19'-9 15/16" | 21'-0" | 21'-0" | 21'-0" | 21'-0" | 26'-2 1/16" | 23'-3 15/16" | 25'-6" | 25'-0" | 1'-2 1/16"

Cross Frame Far Side G2, G3, G4, G5: 22'-2 1/16" | 20'-0" | 20'-0" | 22'-3" | 20'-6 15/16" | 24'-5 1/16" | 21'-9" | 20'-0" | 20'-0" | 23'-3" | 20'-6 15/16" | 22'-2 1/16" | 21'-0" | 21'-0" | 21'-0" | 21'-0" | 23'-9 15/16" | 25'-8 1/16" | 25'-6" | 25'-0" | Symm. About ℄ 1'-2 1/16"

Stiffeners Spacing: 2'-3" | 2@6'-3" | 52'-11" | 6'-8" | 12'-8" | 3@6'-0" | 3@6'-0" | 13'-0" | 7'-0" | 54'-0" | 7'-0" | 13'-0" | 3@6'-0" | 2@7'-0" | 14'-0" | 7'-0" | 56'-0" | 7'-0" | 13'-3" | 3@6'-3" | 3@6'-8" | 12'-6" | 2@6'-3" | 62'-6"

Top Flange: 72'-4 1/4" 5/8 × 12 | 23'-0" 1 1/2 × 12 | 21'-0" 2 1/8 × 12 | 24'-6" 1 1/2 × 12 | 61'-6" 5/8 × 12 | 22'-6" 1 1/2 × 12 | 22'-0" 2 × 12 | 23'-0" 1 1/2 × 12 | 54'-0" 3/4 × 12 | 29'-0" 1 5/8 × 14 | 26'-0" 2 1/4 × 14 | 23'-6" 1 5/8 × 14 | 38'-6" 3/4 × 12

Stud Spacing: 9 Sp@14" = 10'-6" | 45 Spaces @ 17" = 63'-9" | 28'-3" | 30'-3" | 47 Spaces @ 17" = 66'-7" | 28'-2" | 28'-10" | 42 Spaces @ 17" = 59'-6" | 36'-8" | 30'-7" | 12 Sp@ 15"=15'-0" | 19 sp. @ 17" = 26'-11"

see Note A

10 1/4" ℄ Bent 1 Bearing | ℄ Pier 2 | ℄ Pier 3 | ℄ Pier 4

Type 4 | Type 3 | Type 3 | Type 2 | Type 4 | Type 2 | Type 3 | Type 3 | Type 2 | Type 4 | Type 2 | Type 3 | Type 2 | Type 1 | Type 4 | Type 2 | Type 3

10'-6" | 10'-6" | 11'-0" | 11'-0" | 13'-0" | 13'-0"

Bottom Flange: 95'-4 1/4" 1 1/8" × 16" | 21'-0" 1 3/4" × 16" | 108'-6" 1 1/8" × 16" | 22'-0" 1 5/8" × 16" | 106'-0" 1 1/8" × 16" | 26'-0" 2" × 18" | 62'-0" 1 1/4" × 18"

NOTE A : 5 Spaces @ 6" = 2'-6"

* See Flange Width Transition, Dwg. 533

HALF BEAM ELEVATION
SCALE : H=1/16", V=1/2"

FRAMING PLAN

INDIANA DEPARTMENT OF ~~HIGHWAYS~~ TRANSPORTATION

VIGO COUNTY

SCALE:— As Noted DATE:— 19

DRAWING:- S31 OF 37 SHEET:- 56 OF 92

PROJECT:- M-T610(1)

BRIDGE CONTRACT NO. B-18969

BRIDGE FILE:- 40-84-7279

HENRY C. BAKER REGISTERED No. 13692 STATE OF INDIANA PROFESSIONAL ENGINEER

DESIGNED HIR	C'K'D. DGP		
DRAWN PGS/GEL	C'K'D. EBM		
TRACED GEL	C'K'D. EBM		

SF-22317

TP101

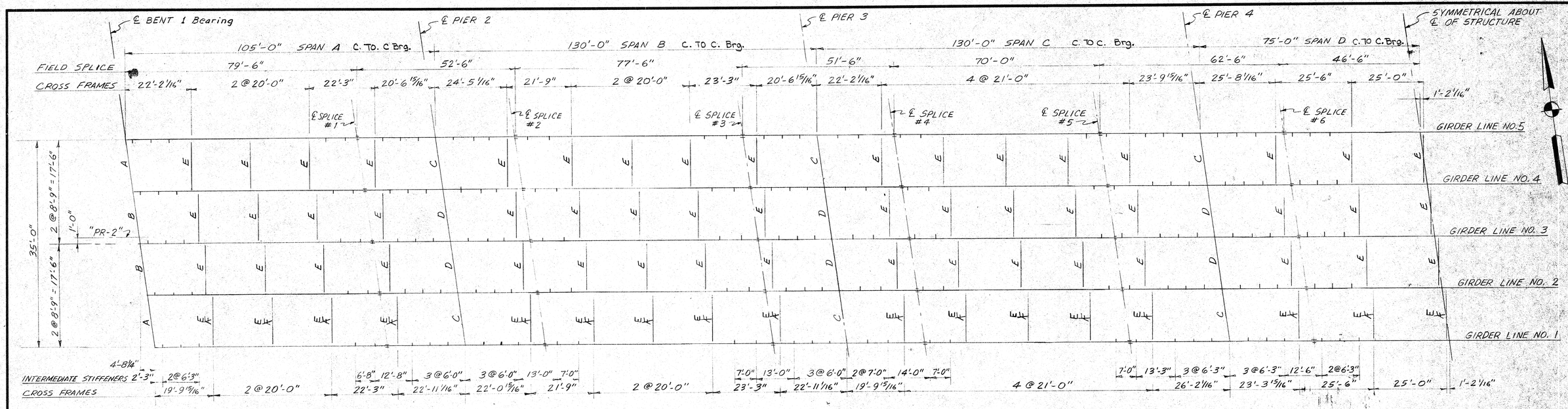

FRAMING PLAN - E.B.L.

SCALE: 1/16" = 1'-0" HORIZ.
1/8" = 1'-0" VERT.

FABRICATION and ERECTION NOTES

High Strength Bolts 7/8" diameter unless noted; Open Holes 15/16" diameter unless noted.

All paint shall be in accordance with current State Highway Specifications Shop Paint; Zinc Silicate, Field Paint; Vinyl Finish Cost.

All structural steel shall conform to ASTM A-36 unless otherwise noted.

The Contractor shall prepare detailed working shop drawings to enable him to fabricate, erect and construct all parts of the work in conformity with the Engineers drawings and specifications and shall submit five (5) copies to the Engineer. See Article 711.04 of the specifications.

The shop plans shall show a plan of matchmarking for all reamed pieces.

All splice plates to be removed, cleaned and deburred after reaming. Splice plates shall not extend beyond the end of the girder after bolting for shipment.

The shop plans shall indicate whether reaming is to be done in the shop or field. If shop reaming or drilling is used the girders shall be assembled in accordance with no load camber and reaming diagram. If the girders are shop reamed or drilled, full size drift pins shall be used in erection.

Structural steel for welding may be flame cut if the flame cutting is mechanically guided. Hand flame cutting shall be used only when approved and the surface is further treated by milling, grinding, or chipping and grinding.

The estimated weight of structural steel is shown on the Framing Plan.

Shims between girders and top shoes shall be built up. No shim shall be less than 1/8" in thickness.

Rivets shall not be used in the assembly of structural steel.

~~Diameter of holes in all materials connecting top shoes to girder flanges to be 1" diameter.~~ Bolts connecting girder flange to top shoe shall extend into top shoe a minimum of 1 inch.

As soon as the Engineer has approved the field welds, all welds and any surface from which the shop coat has been omitted or becomes worn off or has otherwise become defective shall be thoroughly cleaned of all charred paint or any foreign matter and completely covered with one coat shop paint, unless the surface is specified otherwise.

The weight of high strength bolts is not included in the estimated weight of structural steel. The cost of these bolts shall be included in the cost of structural steel.

Holes for girder splices and splice plates shall be subpunched or subdrilled and reamed to size while assembled. See Article 711.24 of the Specifications. Flange splice bars shall be subdrilled and reamed or drilled full size while assembled.

Materials as listed on the shop drawings which do not require mill test reports may be changed from those shown on the contract plans subject to approval. The material specification shall be given on the shop drawings if different than that on contract plans. See Article 711.07 of the Specifications.

Girders must be cambered to a smooth curve. Camber must be checked after shop welding is completed and while beams are supported in such a way as to have no bending moment in the direction of camber.

When the girder sections are fit up in the shop for reaming or drilling of field splices, the centerlines of opposing flanges shall not deviate more than 1/8" with the webs in alignment.

If girders are shop reamed, or drilled, progressive girder assembly will be permitted. See Article 711.44 of the Specifications.

All field welding to be included in the cost of structural steel.

All field splices are optional (except as noted) subject to "Regulations pertaining to the movement of overlength concrete and steel beams on State Highways," as stated in supplement No. 2 to General Letter No. 19-71. Shop plans shall indicate which splices the contractor intends to eliminate and also means of transportaion, whether by rail or over State Highways.

A-588 Steel may be substituted for A-572-Gr 50 at no increase in cost.

Sheared plates or universal mill plates shall be ordered with sufficient additional width to allow for trimming of edges to provide built-in camber for dead load deflection and vertical curve. Trimming shall be by flame cutting. The faying surfaces of the web and flange plates and the adjacent surfaces that are to be fillet welded shall be cleaned by grinding prior to assembly and welding of web to flange.

Estimated weight of Structural Steel: 2,210,125 lbs. (Includes 1,951,046 lbs for A572, 204,822 lbs for A36, and 54,257 lbs for A514).

DATA FOR DESIGN AND DETAILS

LIVE LOAD: Designed for HS 20-44 and Military Loadings in accordance with 1983 AASHTO Specifications.

DEAD LOAD: Designed for actual dead load with 35 lbs./Sq. Ft. future wearing surface.

ALLOWABLE STRESSES: To be in accordance with 1983 AASHTO Specifications.

REV. 1-4-91 : USE ALL "TYPE E" CROSS FRAMES

DESIGNED	HJZ	C'K'D	DGP
DRAWN	PGS	C'K'D	EBM
TRACED	DRA	C'K'D	EBM

SF-22317

FRAMING PLAN

INDIANA DEPARTMENT OF ~~HIGHWAYS~~ TRANSPORTATION

VIGO COUNTY

SCALE:- As Noted DATE:- 19

DRAWING:- S32 OF 37 SHEET:- 57 OF 92

PROJECT:- M-T610(1)

BRIDGE CONTRACT NO. B-18969

BRIDGE FILE:- 90-89-7279 EBL

HENRY C. RHEE — No. 13692 — STATE OF INDIANA — REGISTERED PROFESSIONAL ENGINEER

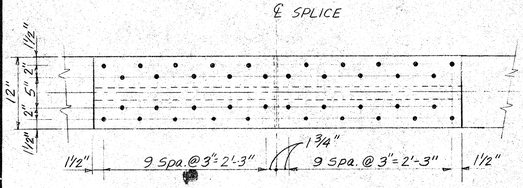

TOP FLANGE

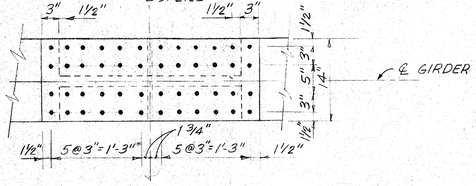

TOP FLANGE

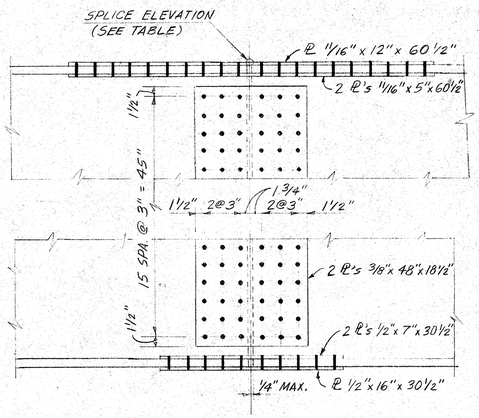

ELEVATION

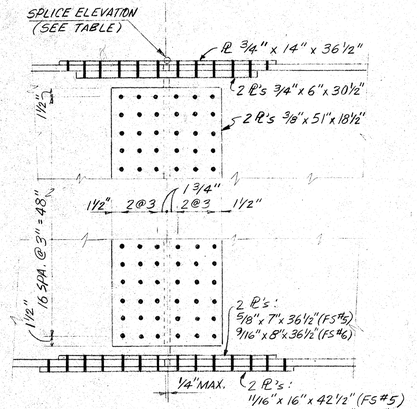

ELEVATION

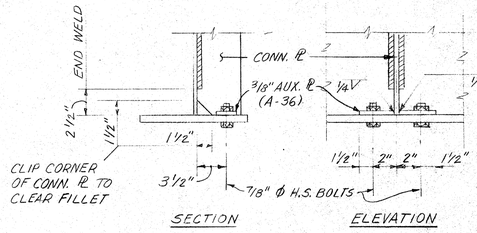

SECTION ELEVATION

CONNECTION ℄ ATTACHMENT @ TENSION OR REVERSAL FLANGE

SCALE: NONE

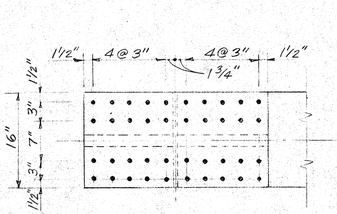

BOTTOM FLANGE

SPLICE DETAIL - NOS. 1, 2, 3 & 4

SCALE: 1" = 1'-0"

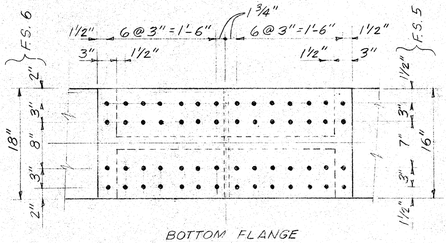

BOTTOM FLANGE

SPLICE DETAIL - NOS. 5 & 6

SCALE: 1" = 1'-0"

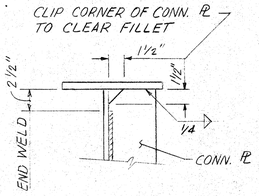

CONNECTION ℄ ATTACHMENT @ COMPRESSION FLANGE

SCALE: NONE

~~TABLE OF CAMBERS (INCHES) PR-1 & PR-2~~

	℄ TOP SHOES BENT 1	F.S. 1 1/4 POINT	F.S. 1 1/2 POINT	F.S. 1 3/4 POINT	F.S. 1	℄ TOP SHOES PIER 2	F.S. 2	F.S. 2 1/4 POINT	F.S. 2 1/2 POINT	F.S. 2 3/4 POINT	F.S. 3	℄ TOP SHOES PIER 3	F.S. 4	F.S. 4 1/4 POINT	F.S. 4 1/2 POINT	F.S. 4 3/4 POINT	F.S. 5	℄ TOP SHOES PIER 4	F.S. 6	F.S. 6 1/4 POINT	F.S. 6 1/2 POINT	F.S. 6 3/4 POINT	F.S. 7	℄ TOP SHOES PIER 5	F.S. 8	F.S. 8 1/4 POINT	F.S. 8 1/2 POINT	F.S. 8 3/4 POINT	F.S. 9	℄ TOP SHOES PIER 6	F.S. 10	F.S. 10 1/4 POINT	F.S. 10 1/2 POINT	F.S. 10 3/4 POINT	F.S. 11	℄ TOP SHOES PIER 7	F.S. 12	F.S. 12 1/4 POINT	F.S. 12 1/2 POINT	F.S. 12 3/4 POINT	℄ TOP SHOES BENT 8
DEAD LOAD STEEL	0	3/16	1/4	1/8	1/8	0	1/8	1/8	5/16	3/16	1/16	0	1/16	1/16	1/8	1/16	1/16	0	3/16	5/16	1/2	5/16	3/16	0	1/16	1/16	1/8	1/16	1/16	0	1/16	3/16	5/16	1/8	1/8	0	1/8	1/8	1/4	3/16	0
DEAD LOAD CONCRETE	0	1 7/16	1 5/8	1 11/16	5/8	0	3/4	1	2	1 1/8	7/16	0	3/8	1/2	1	5/16	1/4	0	1 1/2	2 1/16	3 3/16	2 1/16	1 1/2	0	5/16	1/4	1	1/2	3/8	0	7/16	1 1/8	2	1	3/4	0	5/8	1 1/16	1 5/8	1 1/16	0
SUBTOTAL	0	1 5/8	1 7/8	1 13/16	3/4	0	7/8	1 1/8	2 5/16	1 5/8	1/2	0	7/16	9/16	1 1/8	3/8	5/16	0	1 11/16	2 3/16	4 1/16	2 3/16	1 1/16	0	3/8	5/16	1 1/8	7/16	7/16	0	1/2	1 5/16	2 5/16	1 1/8	7/8	0	3/4	1 3/16	1 7/8	1 1/8	0
VERTICAL CURVE	0	0	0	0	0	0	0	0	0	0	0	0	0	0	0	0	0	0	0	0	0	0	0	0	0	0	0	0	0	0	0	0	0	0	0	0	-5/16	-5/16	-1/16	-3/16	0
TOTAL CAMBER	0	1 5/8	1 7/8	1 13/16	3/4	0	7/8	1 1/8	2 5/16	1 5/8	1/2	0	7/16	9/16	1 1/8	3/8	5/16	0	1 11/16	2 3/16	4 1/16	2 3/16	1 1/16	0	3/8	5/16	1 1/8	3/16	7/16	0	1/2	1 5/16	2 5/16	1 1/8	7/8	0	3/16	1/2	1 3/16	1/2	0
~~"PR-2" VERTICAL CURVE~~ →																																				0	-1/16	-1/4	-1/2	-5/8	0
~~"PR-2" TOTAL CAMBER~~ →																																				0	1/2	3/16	1 1/8	1	0

NOTE:
SEE DRAWING 533B (SHEET 58B) FOR "TOTAL CAMBER" TABLES, INCLUDING VERTICAL CURVE AND SUPERELEVATION TRANSITION; ALSO FOR NO LOAD CAMBER AND REAMING DIAGRAM TABLES.

~~TABLE OF ELEVATIONS FOR TOP OF GIRDER SPLICES PR-1 & PR-2~~

FIELD SPLICE	F.S. 1 PR-1	F.S. 1 PR-2	F.S. 2	F.S. 3	F.S. 4	F.S. 5	F.S. 6	F.S. 7	F.S. 8	F.S. 9	F.S. 10	F.S. 11	F.S. 12
GIRDER #1	482.175	~~482.175~~	482.415	482.606	482.742	482.949	483.272	483.532	483.559	~~483.745~~	483.897	484.140	484.205
GIRDER #2	482.306	482.306	482.546	482.737	~~482.873~~	483.079	~~483.402~~	~~483.662~~	483.689	483.875	484.028	484.271	484.329
GIRDER #3	482.436	482.436	482.676	482.867	~~483.003~~	483.072	~~483.531~~	~~483.792~~	483.819	484.006	484.158	~~484.401~~	~~484.455~~
GIRDER #4	482.445	~~482.337~~	~~482.563~~	482.753	482.890	483.096	483.419	483.679	483.706	~~483.892~~	~~484.045~~	484.288	484.342
~~GIRDER #5~~	~~482.443~~	482.337	482.419	482.610	482.747	482.952	483.275	483.536	~~483.563~~	483.749	483.901	~~484.144~~	~~484.198~~

NOTE: SEE DRAWING 533A (SHT. 58A) FOR TABLE OF ELEVATIONS FOR TOP OF GIRDER SPLICES ALONG LINES "PR-1" AND "PR-2".

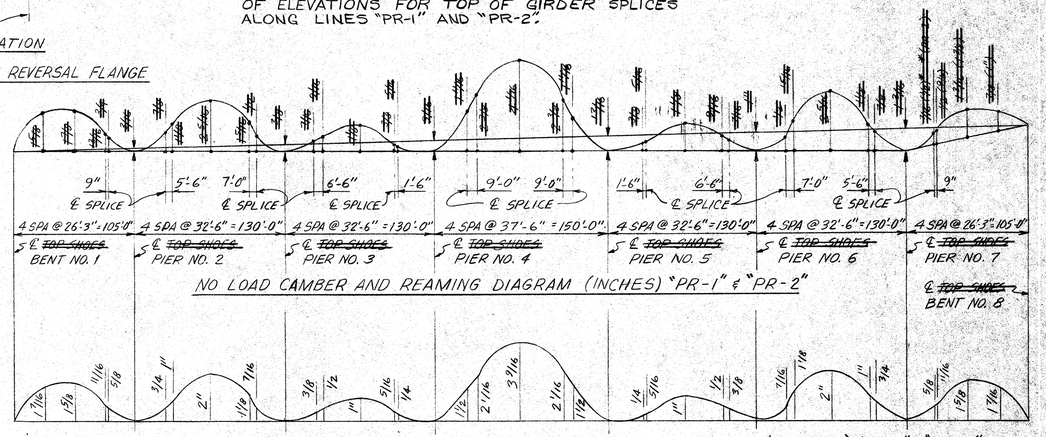

NO LOAD CAMBER AND REAMING DIAGRAM (INCHES) "PR-1" & "PR-2"

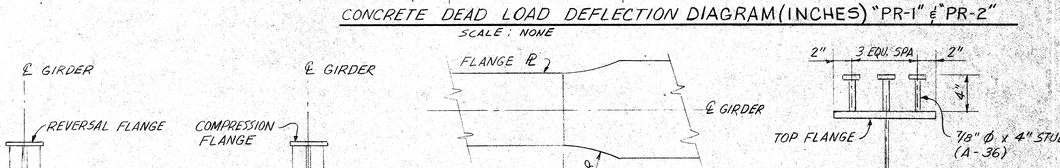

CONCRETE DEAD LOAD DEFLECTION DIAGRAM (INCHES) "PR-1" & "PR-2"

SCALE: NONE

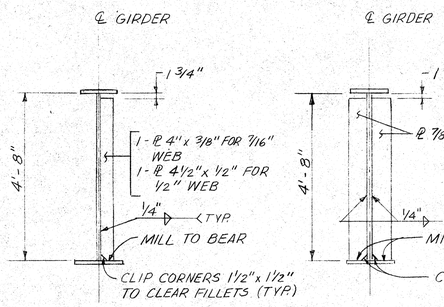

TRANSVERSE STIFFENER DETAIL

SCALE: ½" = 1'-0"

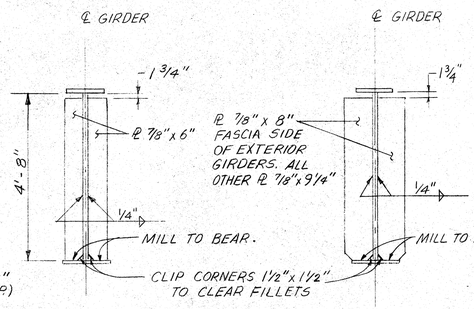

BEARING STIFFENER DETAIL @ BENT NOS. 1 & 8 (TYPE 4)

SCALE: ½" = 1'-0"

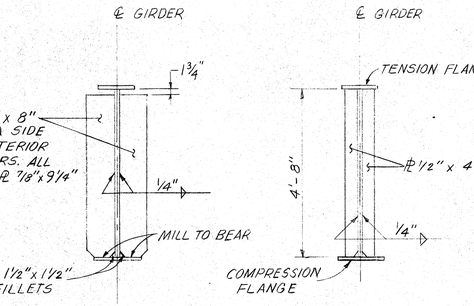

BEARING STIFFENER DETAIL @ PIERS (TYPE 4)

SCALE: ½" = 1'-0"

CROSS FRAME CONNECTION STIFFENER DETAIL (TYPE 1)

SCALE: ½" = 1'-0"

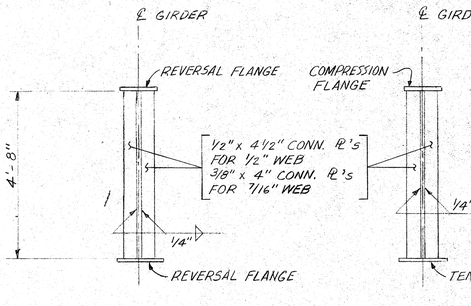

CROSS FRAME CONNECTION STIFFENER DETAIL (TYPE 2)

SCALE: ½" = 1'-0"

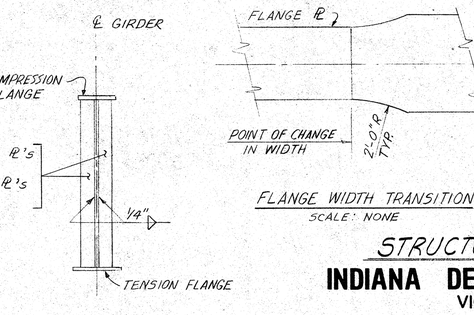

CROSS FRAME CONNECTION STIFFENER DETAIL (TYPE 3)

SCALE: ½" = 1'-0"

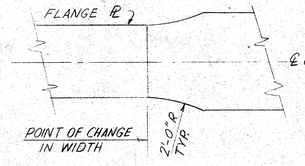

FLANGE WIDTH TRANSITION

SCALE: NONE

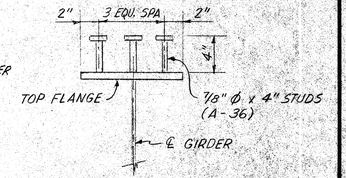

SHEAR CONNECTOR DETAIL

SCALE: NONE

STRUCTURAL STEEL DETAILS

INDIANA DEPARTMENT OF ~~HIGHWAYS~~ TRANSPORTATION

VIGO COUNTY

SCALE:- AS NOTED DATE:- 19

DESIGNED HIZ C'K'D DGP
DRAWN PAF C'K'D EBM
TRACED DEA C'K'D EBM

SF-22317

DRAWING:- S33 OF 37 SHEET:- 58 OF 92
PROJECT:- M-T610(1)
BRIDGE CONTRACT NO.
BRIDGE FILE:- 40-84-7279

REVISED 1-4-91: TABLE OF CAMBER, SPLICE ELEVATION TABLE, NO LOAD CAMBER AND REAMING DIAGRAM, CONCRETE DEAD LOAD DEFLECTION DIAGRAM.

HENRY C. RH STATE OF No. 13692 INDIANA PROFESSIONAL ENGINEER

TP101

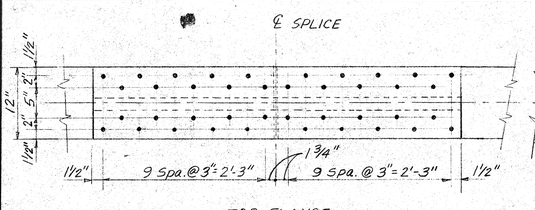

TOP FLANGE

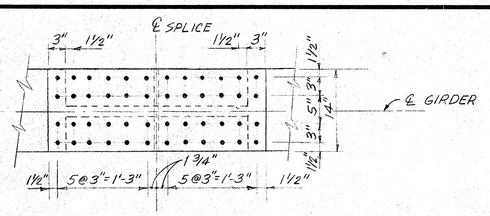

TOP FLANGE

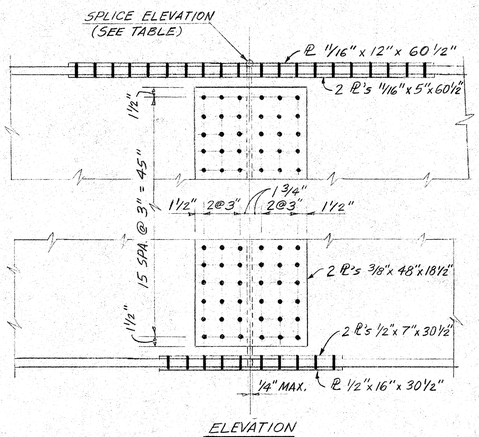

ELEVATION

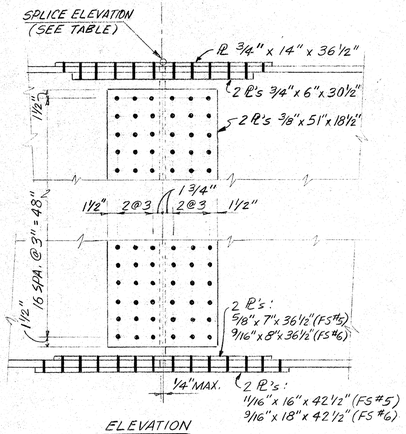

ELEVATION

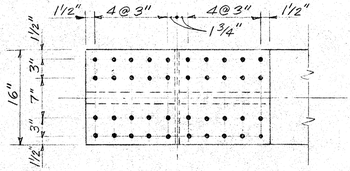

BOTTOM FLANGE

SPLICE DETAIL - NOS. 1, 2, 3 & 4

SCALE: 1" = 1'-0"

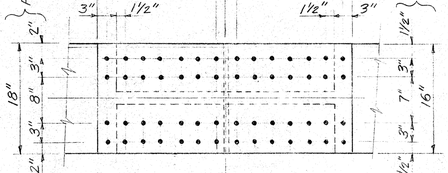

BOTTOM FLANGE

SPLICE DETAIL - NOS. 5 & 6

SCALE: 1" = 1'-0"

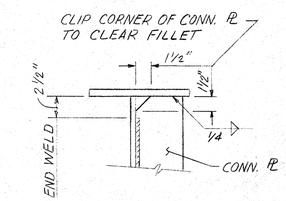

CONNECTION ℄ ATTACHMENT @ COMPRESSION FLANGE

SCALE: NONE

~~TABLE OF DEAD LOAD CAMBERS (INCHES) "PR-1" & "PR-2"~~

	℄ BRG. BENT 1	¼ POINT	½ POINT	¾ POINT	F.S. 1	℄ BRG. PIER 2	F.S. 2	¼ POINT	½ POINT	¾ POINT	F.S. 3	℄ BRG. PIER 3	F.S. 4	¼ POINT	½ POINT	¾ POINT	F.S. 5	℄ BRG. PIER 4	F.S. 6	¼ POINT	½ POINT	¾ POINT	F.S. 7	℄ BRG. PIER 5	F.S. 8	¼ POINT	½ POINT	¾ POINT	F.S. 9	℄ BRG. PIER 6	F.S. 10	¼ POINT	½ POINT	¾ POINT	F.S. 11	℄ BRG. PIER 7	F.S. 12	¼ POINT	½ POINT	¾ POINT	℄ BRG. BENT 8
DEAD LOAD STEEL	0	3/16	¼	1/8	1/8	0	1/8	1/8	5/16	1/16	0	1/16	1/16	1/8	1/16	1/16	0	3/16	5/16	1/2	5/16	3/16	0	1/16	1/8	1/16	1/16	0	1/16	3/16	5/16	1/8	1/8	0	1/8	1/8	¼	3/16	0
DEAD LOAD CONCRETE	0	1/16	1/8	1/16	1/8	0	¾	1	2	1/16	1/16	0	3/8	½	1	5/16	¼	0	1½	2 1/16	3 3/16	2 1/16	1½	0	¼	5/16	1	½	3/8	0	7/16	1 1/8	2	1	¾	0	5/8	1 1/16	1 5/8	1 1/16	0
~~SUBTOTAL~~	0	1/16	1/8	1/16	¾	0	7/8	1 1/8	2 5/16	1 5/16	½	0	7/16	9/16	1 1/8	3/8	5/16	0	1 1/16	2 3/8	4 1/16	2 3/8	1 1/16	0	5/16	3/8	1 1/8	9/16	7/16	0	½	1 9/16	2 5/16	1 1/8	7/8	0	3/4	1 1/16	1 7/16	7/8	0
~~VERTICAL CURVE~~	0	0	0	0	0	0	0	0	0	0	0	0	0	0	0	0	0	0	0	0	0	0	0	0	0	0	0	0	0	0	0	0	0	0	0	0	5/16	9/16	1/16	3/4	0
~~TOTAL CAMBER~~	0	1/16	1/16	1/16	¾	0	7/8	1 1/8	2 5/16	1 5/16	½	0	7/16	9/16	1 1/8	3/8	5/16	0	1 1/16	2 3/8	4 1/16	2 3/8	1 1/16	0	5/16	3/8	1 1/8	9/16	7/16	0	½	1 9/16	2 5/16	1 1/8	7/8	0	7/16	½	1 1/16	7/8	0
~~"PR-2" VERTICAL CURVE~~ →																																				0	-¼	-½	-5/8	0
~~"PR-2" TOTAL CAMBER~~ →																																				0	½	9/16	1 3/16	1	0

NOTE:
SEE DRAWING 333B (SHEET 58B) FOR "TOTAL CAMBER" TABLES, INCLUDING VERTICAL CURVE AND SUPERELEVATION TRANSITION; ALSO FOR NO LOAD CAMBER AND REAMING DIAGRAM TABLES.

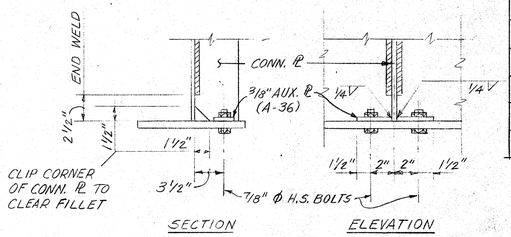

CLIP CORNER OF CONN. ℄ TO CLEAR FILLET

SECTION ELEVATION

CONNECTION ℄ ATTACHMENT @ TENSION OR REVERSAL FLANGE

SCALE: NONE

TABLE OF ELEVATIONS FOR TOP OF GIRDER SPLICES "PR-1" & "PR-2"

FIELD SPLICE	F.S. 1 PR-1	F.S. 1 PR-2	F.S. 2 PR-1	F.S. 2 PR-2	F.S. 3	F.S. 4	F.S. 5	F.S. 6	F.S. 7	F.S. 8	F.S. 9	F.S. 10	F.S. 11	F.S. 12
GIRDER #1	482.259	482.259	482.415	482.415	482.606	482.742	482.843	483.223	483.483	483.559	483.745	483.897	484.140	484.288
GIRDER #2	482.390	482.390	482.546	482.546	482.737	482.873	483.073	483.353	483.613	483.689	483.875	484.028	484.271	484.415
GIRDER #3	482.520	482.520	482.676	482.676	482.867	483.003	483.208	483.482	483.743	483.819	484.006	484.158	484.401	484.536
GIRDER #4	482.528	482.480	482.578	482.573	482.753	482.890	483.096	483.370	483.630	483.706	483.892	484.045	484.288	484.406
GIRDER #5	482.525	482.421	482.459	482.447	482.610	482.747	482.952	483.229	483.487	483.563	483.749	483.901	484.144	484.282

NOTE: SPLICE ELEVATIONS ARE WITH FALSEWORK REMOVED AND CARRYING STEEL DEAD LOAD ONLY. TOP OF GIRDER SPLICE PLATES SHALL BE ADJUSTED TO THE ABOVE ELEVATIONS BEFORE BOLTING FIELD SPLICES.

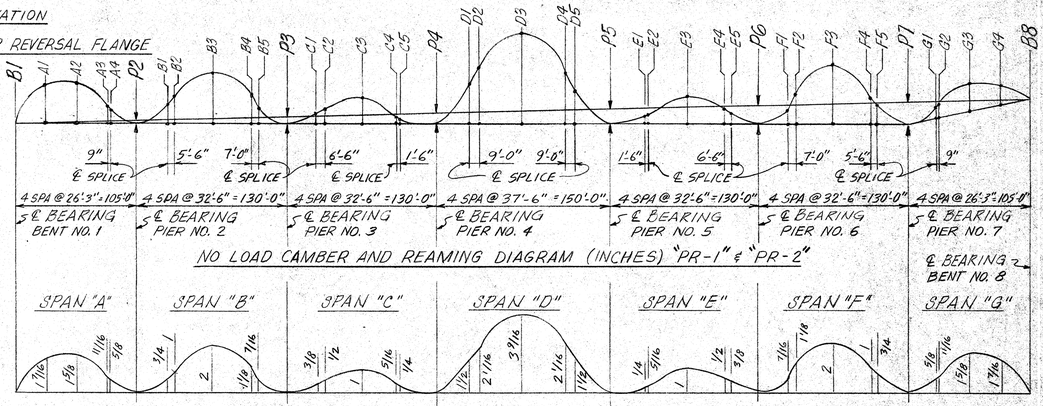

NO LOAD CAMBER AND REAMING DIAGRAM (INCHES) "PR-1" & "PR-2"

CONCRETE DEAD LOAD DEFLECTION (INCHES) "PR-1" & "PR-2"

SCALE: NONE

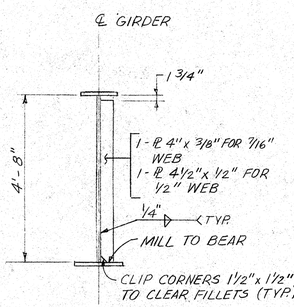

TRANSVERSE STIFFENER DETAIL

SCALE: ½" = 1'-0"

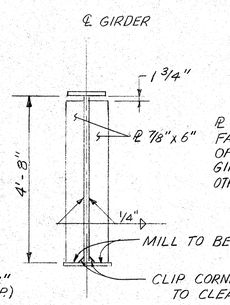

BEARING STIFFENER DETAIL @ BENT NOS. 1 & 8 (TYPE 4)

SCALE: ½" = 1'-0"

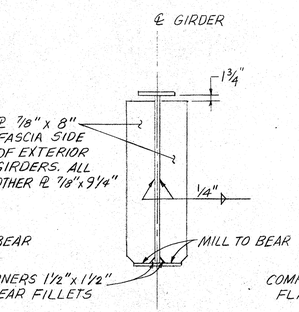

BEARING STIFFENER DETAIL @ PIERS (TYPE 4)

SCALE: ½" = 1'-0"

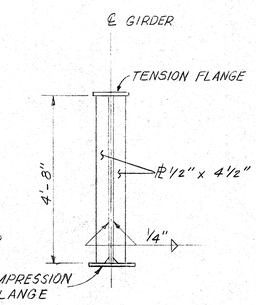

CROSS FRAME CONNECTION STIFFENER DETAIL (TYPE 1)

SCALE: ½" = 1'-0"

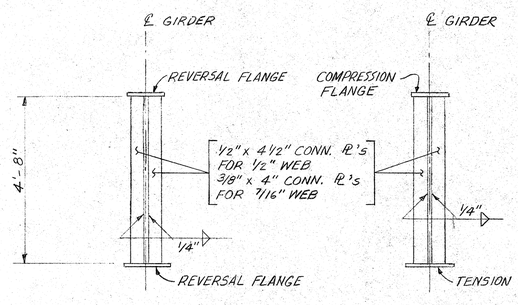

CROSS FRAME CONNECTION STIFFENER DETAIL (TYPE 2)

SCALE: ½" = 1'-0"

CROSS FRAME CONNECTION STIFFENER DETAIL (TYPE 3)

SCALE: ½" = 1'-0"

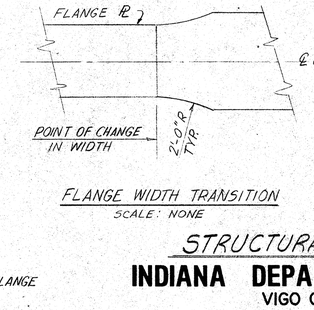

FLANGE WIDTH TRANSITION

SCALE: NONE

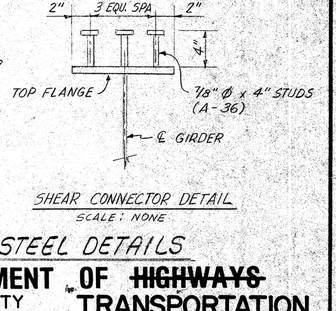

SHEAR CONNECTOR DETAIL

SCALE: NONE

STRUCTURAL STEEL DETAILS

INDIANA DEPARTMENT OF ~~HIGHWAYS~~ TRANSPORTATION

VIGO COUNTY

SCALE:- AS NOTED DATE:- 19

DESIGNED	HIZ	C'K'D	DGP
DRAWN	PAF	C'K'D	EBM
TRACED	DRA	C'K'D	EBM

SF-22317

DRAWING: 333A OF 37 SHEET:- 58A OF 92

PROJECT:- M-T610(1)

BRIDGE CONTRACT NO. B-18969

BRIDGE FILE:- 40-84-7279

HENRY C. RY REGISTERED No. 10892 STATE OF INDIANA PROFESSIONAL ENGINEER

Sheet Added and Revised 1-4-91: Table of Camber, Splice Elevation Table, No Load Camber and Reaming Diagram

TP101

NO LOAD CAMBER AND REAMING DIAGRAM (INCHES) "PR-1" & "PR-2"

TABLES OF CAMBERS (INCHES) "PR-1" & "PR-2"

		B1	A1	A2	A3	A4	P2	B1	B2	B3	B4	B5	P3	C1	C2	C3	C4	C5	P4	D1	D2	D2	D4	D5	P5	E1	E2	E3	E4	E5	P6	F1	F2	F3	F4	F5	P7	G1	G2	G3	G4	B8
			Span "A"					Span "B"						Span "C"						Span "D"						Span "E"						Span "F"						Span "G"				
DEAD LOAD STEEL		-	3/16	1/4	1/8	1/8	-	1/8	1/8	5/16	3/16	1/16	-	1/16	1/16	1/8	1/16	1/16	-	3/16	5/16	1/2	5/16	3/16	-	1/16	1/16	1/8	1/16	1/16	-	1/16	3/16	5/16	1/8	1/8	-	1/8	1/8	1/4	3/16	-
DEAD LOAD CONC.		-	1 7/16	1 5/8	11/16	5/8	-	3/4	1	2	1 1/8	7/16	-	3/8	1/2	1	5/16	1/4	-	1 1/2	2 1/16	3 9/16	2 1/16	1 1/2	-	1/4	5/16	1	1/2	3/8	-	7/16	1 1/8	2	1	3/4	-	5/8	11/16	1 5/8	1 7/16	-
SUB TOTAL		-	1 5/8	1 7/8	13/16	3/4	-	7/8	1 1/8	2 5/16	1 5/16	1/2	-	7/16	9/16	1 1/8	3/8	5/16	-	1 11/16	2 3/8	4 1/16	2 3/8	1 11/16	-	5/16	3/8	1 1/8	9/16	7/16	-	1/2	1 5/16	2 5/16	1 1/8	7/8	-	3/4	13/16	1 7/8	1 5/8	-
WESTBOUND LANES - "P.R. #1"																																										
GIRDER #1 DIAGRAM D1A	Vertical Curve	-	-	-	-	-	-	-	-	-	-	-	-	-	-	-	-	-	-	-	-	-	-	-	-	-	-	-	-	-	-	-	-	-	-	-	-	-7/16	-7/16	-7/8	-7/8	-
	Supertrans.	-	9/16	7/16	1/4	3/16	-	-	-	-	-	-	-	-	-	-	-	-	-	-	-	-	-	-	-	-	-	-	-	-	-	-	-	-	-	-	-	-11/16	-11/16	-13/16	-5/16	-
	Total Camber	-	2 3/16	2 5/16	1 1/16	15/16	-	7/8	1 1/8	2 5/16	1 5/16	1/2	-	7/16	9/16	1 1/8	3/8	5/16	-	1 11/16	2 3/8	4 1/16	2 3/8	1 11/16	-	5/16	3/8	1 1/8	9/16	7/16	-	1/2	1 5/16	2 5/16	1 1/8	7/8	-	-3/8	-5/16	3/16	7/16	-
GIRDER #2 DIAGRAM D1B	Vertical Curve	-	-	-	-	-	-	-	-	-	-	-	-	-	-	-	-	-	-	-	-	-	-	-	-	-	-	-	-	-	-	-	-	-	-	-	-	-1/8	-3/8	-13/16	-13/16	-
	Supertrans.	-	5/16	1/4	1/8	1/8	-	-	-	-	-	-	-	-	-	-	-	-	-	-	-	-	-	-	-	-	-	-	-	-	-	-	-	-	-	-	-	-11/16	-7/16	-1/2	-1/4	-
	Total Camber	-	1 15/16	2 1/8	15/16	7/8	-	7/8	1 1/8	2 5/16	1 5/16	1/2	-	7/16	9/16	1 1/8	3/8	5/16	-	1 11/16	2 3/8	4 1/16	2 3/8	1 11/16	-	5/16	3/8	1 1/8	9/16	7/16	-	1/2	1 5/16	2 5/16	1 1/8	7/8	-	-1/16	0	9/16	9/16	-
GIRDER #3 DIAGRAM D2A	Vertical Curve	-	-	-	-	-	-	-	-	-	-	-	-	-	-	-	-	-	-	-	-	-	-	-	-	-	-	-	-	-	-	-	-	-	-	-	-	-1/8	-3/8	-3/4	-13/16	-
	Supertrans.	-	1/16	1/16	0	0	-	-	-	-	-	-	-	-	-	-	-	-	-	-	-	-	-	-	-	-	-	-	-	-	-	-	-	-	-	-	-	-5/16	-1/16	-1/16	-1/16	-
	Total Camber	-	1 11/16	1 15/16	13/16	3/4	-	7/8	1 1/8	2 5/16	1 5/16	1/2	-	7/16	9/16	1 1/8	3/8	5/16	-	1 11/16	2 3/8	4 1/16	2 3/8	1 11/16	-	5/16	3/8	1 1/8	9/16	7/16	-	1/2	1 5/16	2 5/16	1 1/8	7/8	-	5/16	3/8	1 1/16	3/4	-
GIRDER #4 DIAGRAM D3	Vertical Curve	-	-	-	-	-	-	-	-	-	-	-	-	-	-	-	-	-	-	-	-	-	-	-	-	-	-	-	-	-	-	-	-	-	-	-	-	-5/16	-5/16	-11/16	-3/4	-
	Supertrans.	-	1/16	1/16	1/8	1/16	-	-3/8	-7/16	-3/8	-3/16	-1/8	-	-	-	-	-	-	-	-	-	-	-	-	-	-	-	-	-	-	-	-	-	-	-	-	-	-	-	-	-	-
	Total Camber	-	1 11/16	1 15/16	15/16	13/16	-	1/2	11/16	1 15/16	1 1/8	3/8	-	7/16	9/16	1 1/8	3/8	5/16	-	1 11/16	2 3/8	4 1/16	2 3/8	1 11/16	-	5/16	3/8	1 1/8	9/16	7/16	-	1/2	1 5/16	2 5/16	1 1/8	7/8	-	7/16	1/2	1 3/16	7/8	-
GIRDER #5 DIAGRAM D4	Vertical Curve	-	-	-	-	-	-	-	-	-	-	-	-	-	-	-	-	-	-	-	-	-	-	-	-	-	-	-	-	-	-	-	-	-	-	-	-	-5/16	-5/16	-5/8	-11/16	-
	Supertrans.	-	0	1/16	1/16	1/16	-	-13/16	-15/16	-7/8	-7/16	-5/16	-	-	-	-	-	-	-	-	-	-	-	-	-	-	-	-	-	-	-	-	-	-	-	-	-	-	-	-	-	-
	Total Camber	-	1 5/8	1 15/16	7/8	13/16	-	1/16	3/16	1 7/16	7/8	3/16	-	7/16	9/16	1 1/8	3/8	5/16	-	1 11/16	2 3/8	4 1/16	2 3/8	1 11/16	-	5/16	3/8	1 1/8	9/16	7/16	-	1/2	1 5/16	2 5/16	1 1/8	7/8	-	7/16	1/2	1 1/4	15/16	-
EASTBOUND LANES - "P R #2"																																										
GIRDER #1 DIAGRAM D2B	Vertical Curve	-	-	-	-	-	-	-	-	-	-	-	-	-	-	-	-	-	-	-	-	-	-	-	-	-	-	-	-	-	-	-	-	-	-	-	-	-5/16	-5/16	-11/16	-3/4	-
	Supertrans.	-	-	-	-	-	-	-	-	-	-	-	-	-	-	-	-	-	-	-	-	-	-	-	-	-	-	-	-	-	-	-	-	-	-	-	-	-7/16	-1/2	-7/8	-11/16	-
	Total Camber	-	1 5/8	1 7/8	13/16	3/4	-	7/8	1 1/8	2 5/16	1 5/16	1/2	-	7/16	9/16	1 1/8	3/8	5/16	-	1 11/16	2 3/8	4 1/16	2 3/8	1 11/16	-	5/16	3/8	1 1/8	9/16	7/16	-	1/2	1 5/16	2 5/16	1 1/8	7/8	-	0	0	5/16	3/16	-
GIRDER #2 DIAGRAM D2A	Vertical Curve	-	-	-	-	-	-	-	-	-	-	-	-	-	-	-	-	-	-	-	-	-	-	-	-	-	-	-	-	-	-	-	-	-	-	-	-	-5/16	-5/16	-5/8	-11/16	-
	Supertrans.	-	-	-	-	-	-	-	-	-	-	-	-	-	-	-	-	-	-	-	-	-	-	-	-	-	-	-	-	-	-	-	-	-	-	-	-	-3/8	-3/8	-7/16	-1/4	-
	Total Camber	-	1 5/8	1 7/8	13/16	3/4	-	7/8	1 1/8	2 5/16	1 5/16	1/2	-	7/16	9/16	1 1/8	3/8	5/16	-	1 11/16	2 3/8	4 1/16	2 3/8	1 11/16	-	5/16	3/8	1 1/8	9/16	7/16		1/2	1 5/16	2 5/16	1 1/8	7/8	-	1/16	1/8	13/16	11/16	-
GIRDER #3 DIAGRAM D2A	Vertical Curve	-	-	-	-	-	-	-	-	-	-	-	-	-	-	-	-	-	-	-	-	-	-	-	-	-	-	-	-	-	-	-	-	-	-	-	-	-1/4	-1/4	-9/16	-11/16	-
	Supertrans.	-	-	-	-	-	-	-	-	-	-	-	-	-	-	-	-	-	-	-	-	-	-	-	-	-	-	-	-	-	-	-	-	-	-	-	-	-5/16	-1/16	-1/16	-1/16	-
	Total Camber	-	1 5/8	1 7/8	13/16	3/4	-	7/8	1 1/8	2 5/16	1 5/16	1/2	-	7/16	9/16	1 1/8	3/8	5/16	-	1 11/16	2 3/8	4 1/16	2 3/8	1 11/16	-	5/16	3/8	1 1/8	9/16	7/16	-	1/2	1 5/16	2 5/16	1 1/8	7/8	-	3/16	1/2	1 1/4	7/8	-
GIRDER #4 DIAGRAM D3	Vertical Curve	-	-	-	-	-	-	-	-	-	-	-	-	-	-	-	-	-	-	-	-	-	-	-	-	-	-	-	-	-	-	-	-	-	-	-	-	-	-	-	-	-
	Supertrans.	-	1/16	1/16	-	-	-	-1/4	-1/4	-1/4	-1/8	-1/8	-	-	-	-	-	-	-	-	-	-	-	-	-	-	-	-	-	-	-	-	-	-	-	-	-	-	-	-	-	-
	Total Camber	-	1 11/16	1 15/16	13/16	3/4	-	5/8	7/8	2 1/16	1 3/16	3/8	-	7/16	9/16	1 1/8	3/8	5/16	-	1 11/16	2 3/8	4 1/16	2 3/8	1 11/16	-	5/16	3/8	1 1/8	9/16	7/16	-	1/2	1 5/16	2 5/16	1 1/8	7/8	-	3/4	13/16	1 7/8	1 5/8	-
GIRDER #5 DIAGRAM D3	Vertical Curve	-	-	-	-	-	-	-	-	-	-	-	-	-	-	-	-	-	-	-	-	-	-	-	-	-	-	-	-	-	-	-	-	-	-	-	-	-	-	-	-	-
	Supertrans.	-	1/16	1/16	1/16	-	-	-1/2	-9/16	-9/16	-5/16	-1/4	-	-	-	-	-	-	-	-	-	-	-	-	-	-	-	-	-	-	-	-	-	-	-	-	-	-	-	-	-	-
	Total Camber	-	1 11/16	1 15/16	7/8	3/4	-	3/8	9/16	1 3/4	1	1/4	-	7/16	9/16	1 1/8	3/8	5/16	-	1 11/16	2 3/8	4 1/16	2 3/8	1 11/16	-	5/16	3/8	1 1/8	9/16	7/16	-	1/2	1 5/16	2 5/16	1 1/8	7/8	-	3/4	13/16	1 7/8	1 5/8	-
		¢ Brg. B1	1/4 Point	1/2 Point	3/4 Point	F.S. #1	¢ Brg. P2	F.S. #2	1/4 Point	1/2 Point	3/4 Point	F.S. #3	¢ Brg. P3	F.S. #4	1/4 Point	1/2 Point	F.S. #5	3/4 Point	¢ Brg. P4	F.S. #6	1/4 Point	1/2 Point	3/4 Point	F.S. #7	¢ Brg. P5	1/4 Point	F.S. #8	1/2 Point	3/4 Point	F.S. #9	¢ Brg. P6	F.S. #10	1/4 Point	1/2 Point	3/4 Point	F.S. #11	¢ Brg. P7	F.S. #12	1/4 Point	1/2 Point	3/4 Point	¢ Brg. B8

NO LOAD CAMBER AND REAMING TABLES (INCHES) "PR-1" & "PR-2"

WESTBOUND LANES-"PR #1"

Girder	Diag.	B1	P2	P3	P4	P5	P6	P7	B8
#1	D1A	0	3/16	-3/4	-1 11/16	-2 3/4	-3 11/16	-4 5/8	0
#2	D1B	0	1/16	-9/16	-1 3/16	-1 7/8	-2 1/2	-3 1/16	0
#3	D2A	0	-1/8	-7/16	-11/16	-1	-1 5/16	-1 9/16	0
#4	D3	0	-2 3/8	-2 7/8	-2 9/16	-2 3/16	-1 7/8	-1 5/8	0
#5	D4	0	-4 7/8	-5 3/4	-4 13/16	-3 3/4	-2 7/8	-1 15/16	0

EASTBOUND LANES-"PR #2"

Girder	Diag.	B1	P2	P3	P4	P5	P6	P7	B8
#1	D2B	0	-3/8	-7/8	-1 5/16	-1 7/8	-2 5/16	-2 13/16	0
#2	D2A	0	-1/4	-9/16	-7/8	-1 5/16	-1 9/16	-1 7/8	0
#3	D2A	0	-1/8	-5/16	-1/2	-3/4	-7/8	-1 1/16	0
#4	D3	0	-1 7/16	-1 13/16	-1 5/8	-1 7/16	-1 1/4	-1 1/16	0
#5	D3	0	-2 13/16	-3 7/16	-2 15/16	-2 5/16	-1 13/16	-1 1/4	0

DESIGNED J.G.	C'K'D N.K.B.		
DRAWN M.E.B.	C'K'D J.G.		
TRACED	C'K'D		

SF-22317

Revised 1-4-91 : Sheet Added

STRUCTURAL STEEL DETAILS

INDIANA DEPARTMENT OF HIGHWAYS

SCALE:- None DATE:-

SENIOR DESIGNER

DRAWING:- 33B OF 37 SHEET:- 58B OF 92
PROJECT:- M-7610(1) STATION:-
BRIDGE CONTRACT NO. B-18969
BRIDGE FILE:- 40-84-7279

HENRY C. AMEE REGISTERED No. 13692 STATE OF INDIANA PROFESSIONAL ENGINEER

TP101

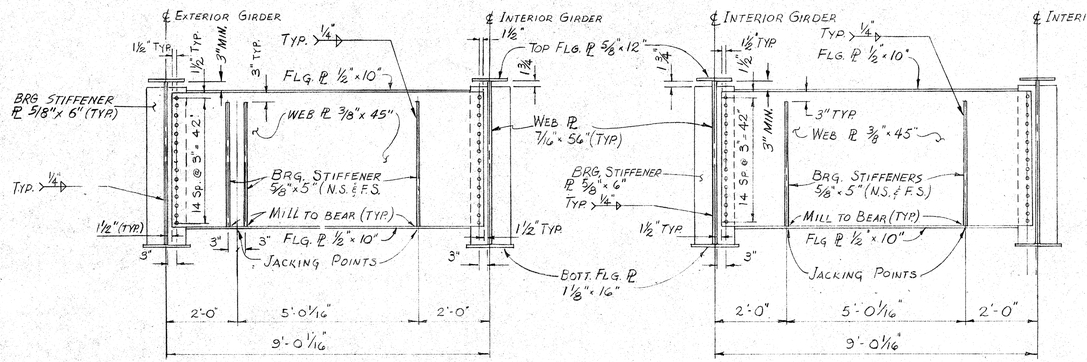

TYPE A

JACKING DIAPHRAGMS AT BENTS

TYPE B

JACKING DIAPHRAGMS AT BENTS

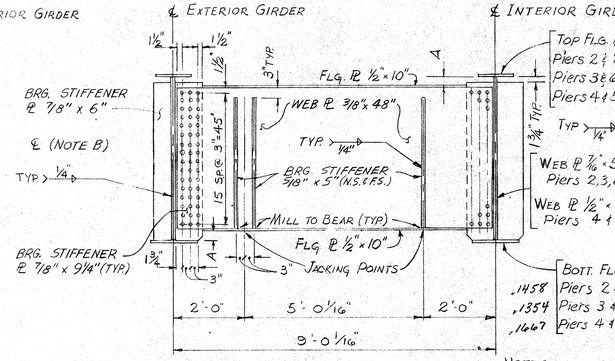

TYPE C

JACKING DIAPHRAGMS AT PIERS

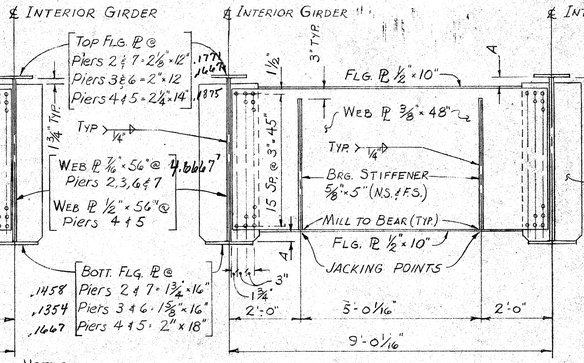

TYPE D

JACKING DIAPHRAGMS AT PIERS

NOTE:
JACKING DIAPHRAGMS TO BE ERECTED SO THAT DIMENSION "A" TOP & BOTT. WILL BE EQUAL (±1")

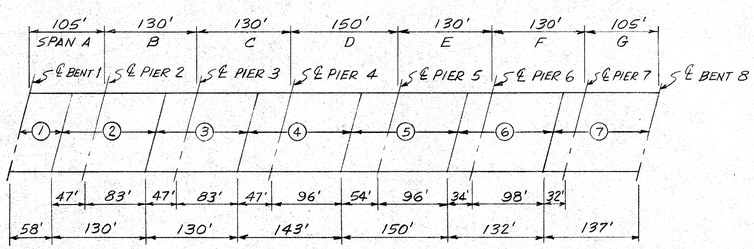

POURING SEQUENCE DIAGRAM "PR-1"

"PR-2" OPPOSITE HAND

SCALE: NONE

- SHIM TABLE -

Bent or Pier No.	Line PR-1--WBL North to South Girder No. 1	2	3	4	5	Line PR-2--EBL North to South Girder No. 5	4	3	2	1
1	½"	½"	½"	½"	½"	1 7/8"	1 5/16"	½"	½"	½"
2	1 1/16"	1 3/4"	1 7/8"	1 1/4"	½"	½"	1 9/16"	½"	½"	½"
3	½"	½"	½"	¾"	9/16"	9/16"	¾"	½"	½"	½"
4	½"	½"	½"	¾"	9/16"	9/16"	¾"	½"	½"	½"
5	½"	½"	½"	¾"	½"	½	¾"	½"	½"	½"
6	½"	½"	½"	11/16"	9/16"	9/16"	11/16"	½"	½"	½"
7	½"	½"	½"	¾"	9/16"	9/16"	¾"	½"	½"	½"
8	7/8"	11/16"	½"	½"	½"	½"	½"	1 1/16"	1"	½"

- SHIM TABLE -

Bent or Pier No.	Line "PR-1" (WBL) NORTH TO SOUTH GIRDER NO. 1	2	3	4	5	Line "PR-2" (EBL) NORTH TO SOUTH GIRDER NO. 5	4	3	2	1
1	5/8"	5/8"	5/8"	1 1/16"	5/8"	2"	1 7/16"	¾"	1 3/16"	1 9/16"
2	1 11/16"	1 3/4"	1 7/8"	1 1/4"	½"	½"	1 5/8"	½"	½"	½"
3	½"	½"	½"	11/16"	½"	9/16"	¾"	9/16"	½"	½"
4	½"	½"	½"	¾"	9/16"	9/16"	¾"	½"	½"	½"
5	½"	½"	½"	¾"	9/16"	9/16"	¾"	½"	½"	½"
6	½"	½"	½"	11/16"	½"	½"	11/16"	½"	½"	½"
7	½"	½"	½"	¾"	9/16"	9/16"	¾"	½"	9/16"	½"
8	1 1/8"	15/16"	¾"	11/16"	11/16"	11/16"	11/16"	1 7/8"	1 3/16"	11/16"

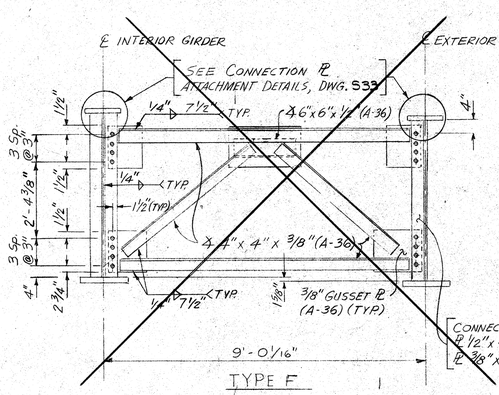

TYPE F

INTERMEDIATE CROSS FRAME

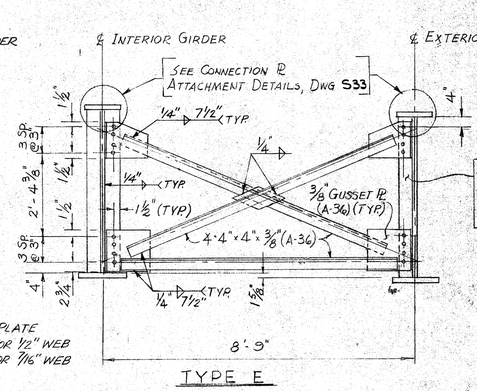

TYPE E

INTERMEDIATE CROSS FRAME

DESIGNED HIZ C'K'D OGP
DRAWN GEL C'K'D EBM
TRACED DRA C'K'D EBM

SF-22317

REV. 1-4-91 : SHIM TABLE, DELETE "TYPE F" INTERMEDIATE CROSS FRAME

STRUCTURAL STEEL DETAILS

INDIANA DEPARTMENT OF ~~HIGHWAYS~~ TRANSPORTATION

VIGO COUNTY

SCALE: ½"=1'-0 Unless Noted DATE:- 19

DRAWING:- S34 OF 37 SHEET:- 59 OF 92

PROJECT:- M-T610(1)

BRIDGE CONTRACT NO.

BRIDGE FILE:- 40-84-7279

HENRY C. RHEE REGISTERED No. 13692 STATE OF INDIANA PROFESSIONAL ENGINEER

TP101

BILL OF MATERIALS

ITEM	TYPE	UNIT	TOTAL
Seismic Isolation Bearing Assembly, 14"x14"	I	Each	20
Seismic Isolation Bearing Assembly, 16"x21"	II	Each	60

TYPE	BEARING LOCATION	NOMINAL D.I.S. BEARING SIZE
I	END BENTS #1 & #8	S14 - 7 - 3.75
II	PIERS #2 THRU #7	R21X16 - 7 - 3.75

Notes:

1 Top & bottom plates of the "Bearing Assembly" Shall be AASHTO M-223 Grade 50.

2 "Bearing Assembly" components & geometry will be verified and coordinated with the bearing manufacturer for design adequacy, field fit, and installation.

~~3 Bottom Flanges of Girders shall have slotted holes for field adjustments, due to temperature.~~

4 Bearing manufacturer shall provide special provisions as required.

5. *Bottom Bearing Plates shall have slotted holes for field adjustments, due to temperature.*

Ⓐ

Top Plate	2 5/8"
D.I.S. I & II	7 3/8"
Bottom Plate	1 3/4"
Lead Plate	1/8"
Nominal Bearing Thickness! (See Note 2, At Left)	11 7/8"

Final Thickness Per D.I.S. Shop Drawings!!!

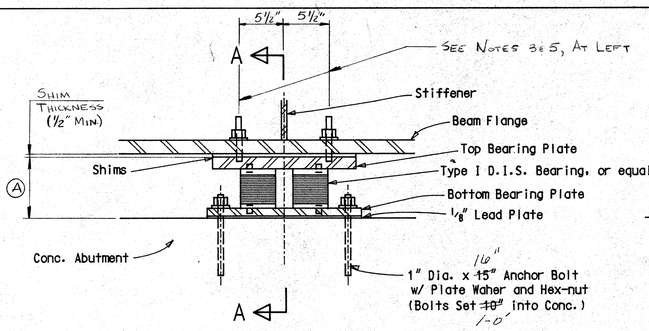

ELEVATION AT END BENTS

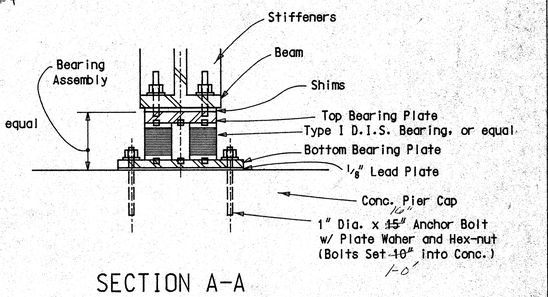

SECTION A-A
END BENTS

ABUTMENTS No. 1 & No. 8
SCHEMATIC INSTALLATION DETAIL
BEARING ASSEMBLY

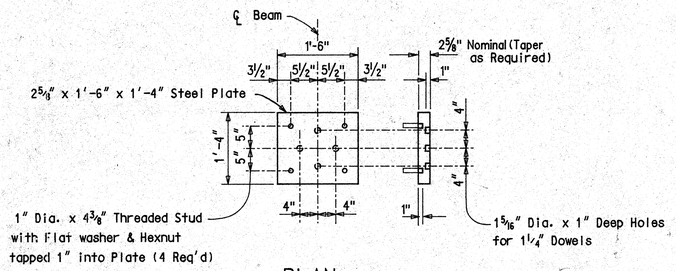

PLAN

END BENT No. 1 & No. 8
TOP BEARING PLATE DETAIL

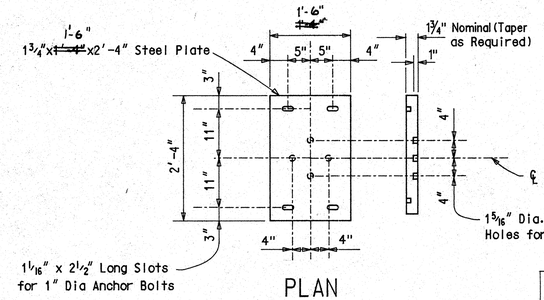

PLAN

END BENT No. 1 & No. 8
BOTTOM BEARING PLATE DETAIL

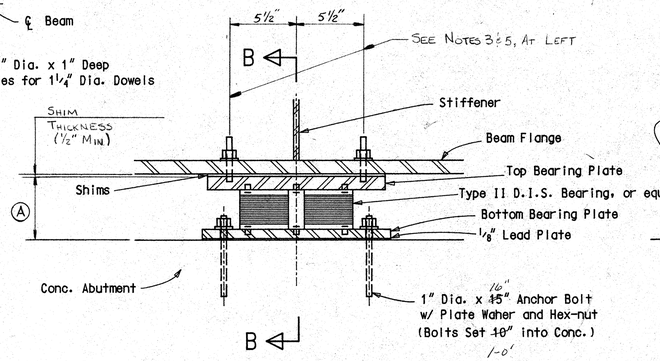

ELEVATION AT PIERS

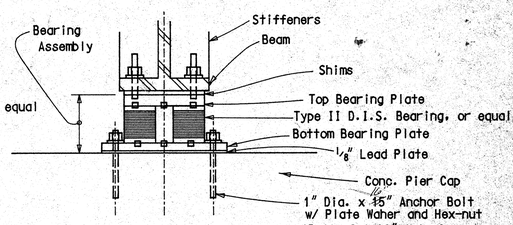

SECTION B-B
PIERS

Note: The weight of swedged anchor bolts is not included in the estimated weight of structural steel. Anchor Bolts for Bott. Plate shall be preset to avoid possible conflict with Reinforcing Steel.

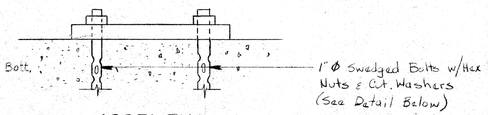

ASSEMBLY

PIERS No. 2 To No. 7
SCHEMATIC INSTALLATION DETAIL
BEARING ASSEMBLY

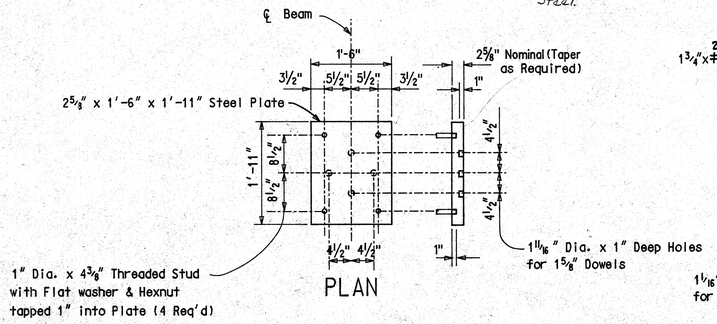

PLAN

PIERS No. 2 To No. 7
TOP BEARING PLATE DETAIL

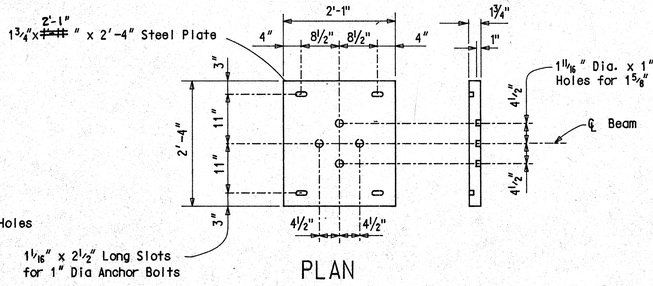

PLAN

PIERS No. 2 To No. 7
BOTTOM BEARING PLATE DETAIL

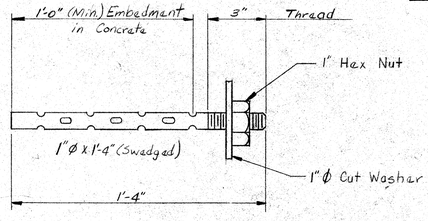

"SWEDGED"
ANCHOR BOLT DETAIL
No Scale

SEISMIC ISOLATION BEARING
ASSEMBLY DETAILS

INDIANA DEPARTMENT OF TRANSPORTATION
VIGO COUNTY

SCALE:- None Unless Noted DATE:- 19

DRAWING:-S35 OF 37 SHEET:- 60 OF 92
PROJECT:-
BRIDGE CONTRACT NO. B-18969
BRIDGE FILE:- 40-84-7279

HENRY C. RHEE REGISTERED No. 13692 STATE OF INDIANA PROFESSIONAL ENGINEER

DESIGNED	SAG	C'K'D	NKB
DRAWN	MAH	C'K'D	NKB
TRACED		C'K'D	

REV. 1-4-91 : "SWEDGED ANCHOR BOLT" DETAIL, NOMINAL BEARING THICKNESS, PLATE DIMENSIONS & NOTES

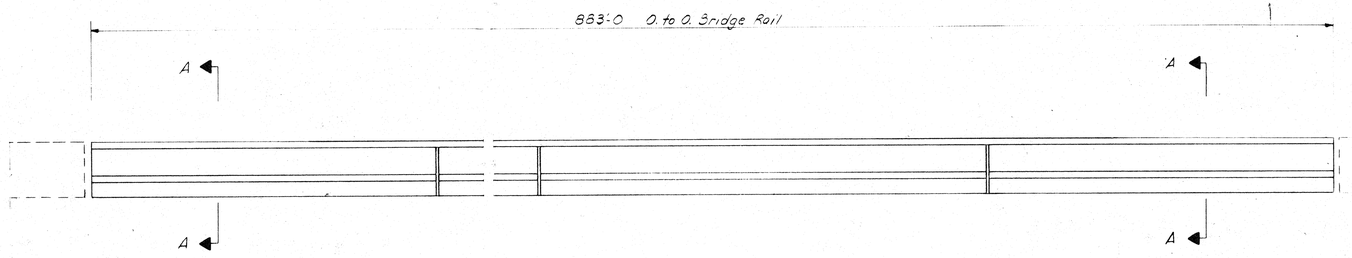

RAILING PLAN

North Coping Shown
South Coping Same by 180° Rotation

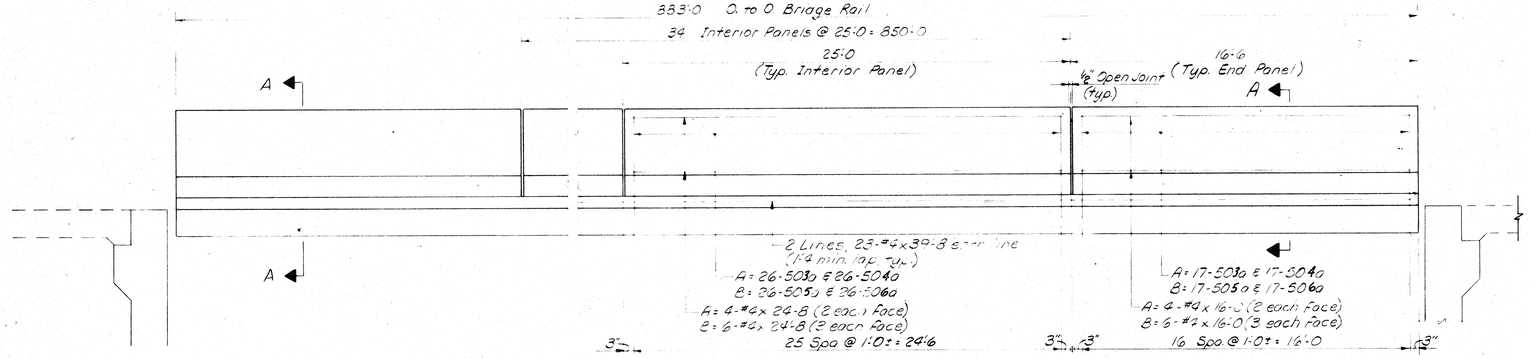

ELEVATION

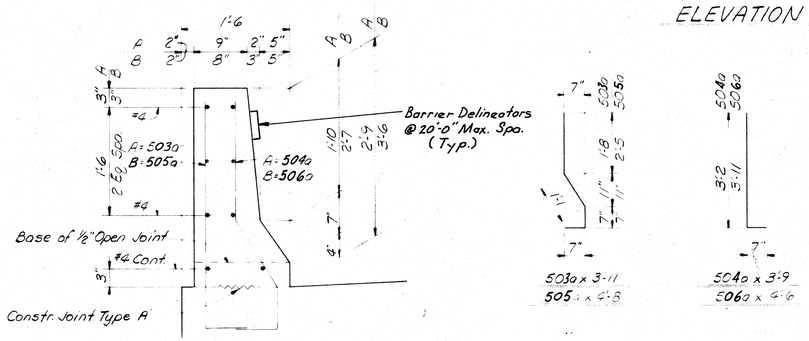

LEGEND
A = Standard Barrier Rail
B = Pedestrian Barrier Rail

SECTION A-A
Scale: 1"=1'-0

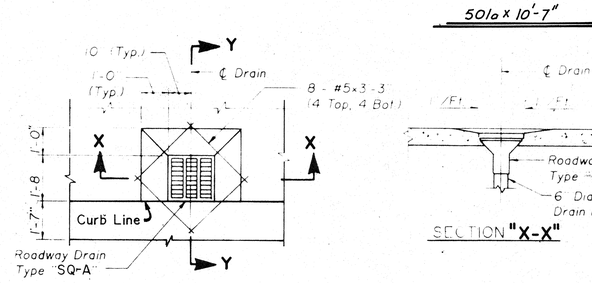

DRAIN PLAN

TYPICAL DRAIN DETAIL
No Scale

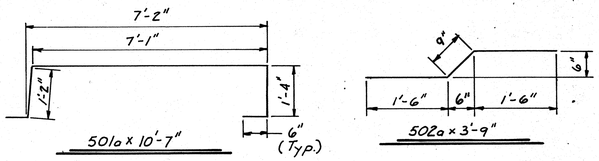

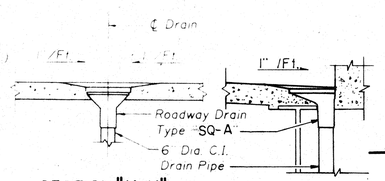

SECTION "X-X"

SECTION "Y-Y"

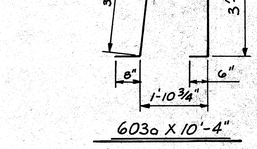

603a X 10'-4"

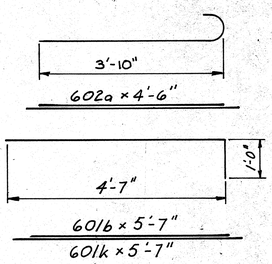

BILL OF MATERIALS

SUPERSTRUCTURE
(W.B.L. & E.B.L.)

E.C. REINFORCING STEEL			
Mk. or Size	No. Bar	Length	Weight
601b	110	5'-7"	
601k	110	5'-7"	
602a	96	4'-6"	
603a	64	10'-4"	
#6	256	34'-7"	
#6	256	30'-2"	
#6	256	29'-5"	
#6	~~7040~~	22'-6"	515,529 Lbs.
TOTAL No. 6 Bars			~~277,612 Lbs.~~
501a	1760	10'-7"	
502a	128	3'-9"	
#5	4646	39'-11"	
#5	256	39'-6"	
#5	256	39'-1"	
#5	256	35'-0"	
#5	192	32'-5"	
#5	48	7'-8"	
#5	552	3'-3"	W.B.L. (Only)
#5	560	3'-3"	E.B.L. (Only)
TOTAL No. 5 Bars (W.B.L.)			127,151 Lbs.
TOTAL No. 5 Bars (E.B.L.)			127,178 Lbs.
* 401b	86	5'-4	
* 401k	86	5'-4	
#4	32	39'-4	1454 Lbs.
TOTAL No. 4 Bars			~~842 Lbs.~~
TOTAL EPOXY COATED REINF. STEEL			~~532,783 Lbs.~~ 771,312 Lbs.

14080

CONCRETE	
Pour No. 1 : 2 @ 69.6 Cys.	139.2 Cys.
Pour No. 2: 2 @ 152.1 Cys.	304.2 Cys.
Pour No. 3: 2 @ 152.1 Cys.	304.2 Cys.
Pour No. 4: 2 @ 167.3 Cys.	334.6 Cys.
Pour No. 5: 2 @ 160.3 Cys.	320.6 Cys.
Pour No. 6: 2 @ 154.5 Cys.	309.0 Cys.
Pour No. 7: 2 @ 177.2 Cys.	354.4 Cys.
Sidewalk : 2 @ 168.8 Cys.	337.6 Cys.
TOTAL CLASS "C" CONCRETE	2403.8 Cys.

MISCELLANEOUS	
Anchor Bolts: AR-22; 2@32 Ea.	64 Ea.
Surface Seal: 2 @ 54,000 Sft.	108,000 Sft.
Modular Exp. Jts.: 4 @ 42.5 Lft.	170 Lft.
Cast Iron Grates, Basins & Fittings:	26,688 Lbs.
(W.B.L.) 13,248 Lbs.	
(E.B.L.) 13,440 Lbs.	
6" Cast Iron Drain Pipe :	40,641 Lbs.
(W.B.L.) 20,174 Lbs.	
(E.B.L.) 20,467 Lbs.	
Masonry Coating: 2 @ 7,400 Sft.	14,800 Sft.
Barrier Delineators: 2 @ 20 Ea.	40 Ea.

BARRIER RAIL
(One Str. Only)

E.C. REINFORCING STEEL			
Size or Mark	No. of Bars	Length	Weight (lbs.)
503a	918	3'-11	"A" (Only)
504a	918	3'-9	"A" (Only)
505a	918	4'-8	"B" (Only)
506a	918	4'-6	"B" (Only)
Total No. 5			16,117 Lbs.
#4	92	39'-3	
#4	340	24'-8	
#4	20	16'-0	
Total No. 4			8,254 Lbs.
Total Epoxy Coated Reinforcing Steel			24,371 Lbs.

CONCRETE	
Class "C" Conc. In Railing "A"	86.0 Cys.
Class "C" Conc. In Railing "B"	103.4 Cys.
TOTAL CLASS "C" CONCRETE	189.4 Cys.

NOTES:

1. 602a & 603b bar quantities for light posts are included in superstructure bill of materials.
2. 603b Bars shown on BR. STD. R2B are replaced by 603a bars for railing "B".
3. For pour diagram SEE DWG. S34 .

CONCRETE BARRIER RAIL DETAILS

INDIANA DEPARTMENT OF ~~HIGHWAYS~~ TRANSPORTATION
VIGO COUNTY

SCALE No Scale Unless Noted DATE - 19

DESIGNED HIZ CKD DGP
DRAWN JEE CKD DGP
TRACED CKD

Revised 8/23/91 : Epoxy Coated Reinf. Steel * Items Added

DRAWING S36 OF 37 SHEET - 61 OF 92
PROJECT M-T610(1)
BRIDGE CONTRACT NO B-18969
BRIDGE FILE - 40-54-7879

HENRY C. RIES
No. 3692
PROFESSIONAL ENGINEER

TP101

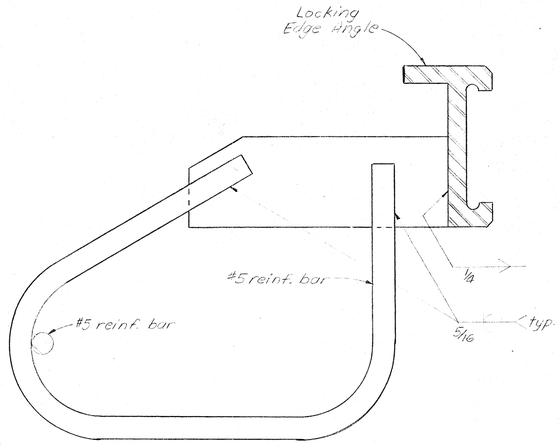

ANCHOR ASSEMBLY
Scale 6"=1'-0
(Anchor Assembly spaced @ 9" c-c max. between support boxes ea. side)

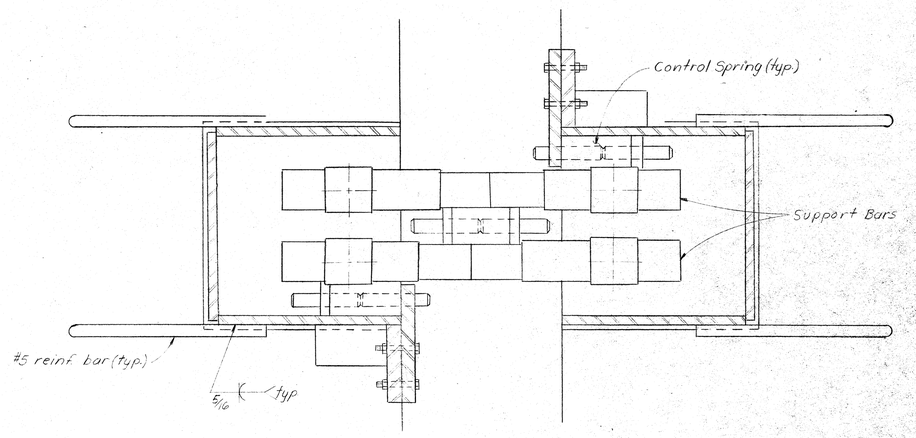

SUPPORT BAR ASSEMBLY PLAN
Scale: 3"=1'-0

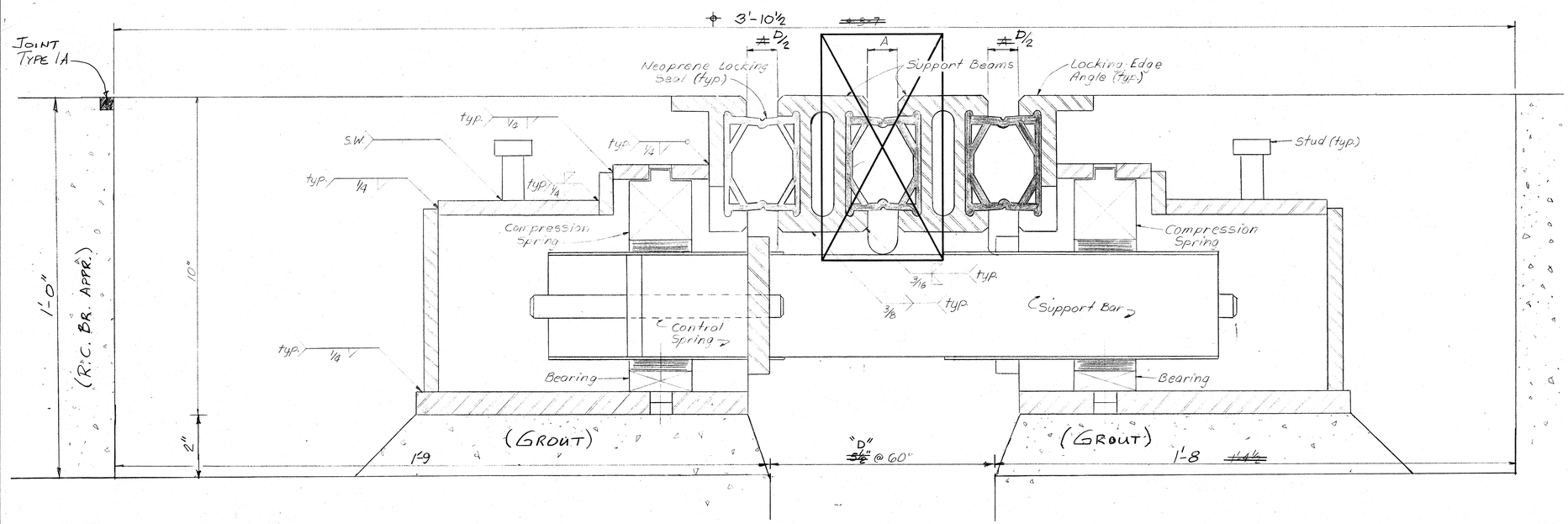

ROADWAY SECTION @ SUPPORT BAR ASSEMBLY
Scale: ~~1"=1'-0~~ N.T.S.

Notes:
Expansion system is to be fabricated to follow the roadway slope.

All welding and painting must comply with State Specifications.

End of seals are to be capped with a neoprene sheet.

Neoprene seals are to be bonded in place.

The expansion dam will be sandblasted prior to seal installation (and painting if required.)

The modular expansion joint shall be capable of a total movement of ~~2.5~~ 3.125 inches.

◆ Recess dimensions shown may be varied to accommodate modular joints of various manufacturers subject to the Engineer's approval.

EXPANSION TABLE - DIMENSION ~~"A"~~ "D"

Location \ Temperature	0°	20°	40°	60°	80°	100°	120°
~~End Bent No 1~~	~~3 3/4"~~	~~3 1/16"~~	~~3 1/16"~~	~~2 3/4"~~	~~2 7/16"~~	~~2 1/16"~~	~~1 3/4"~~
~~End Bent No 2~~	~~3 3/4"~~	~~3 1/16"~~	~~3 1/16"~~	~~2 3/4"~~	~~2 7/16"~~	~~2 1/16"~~	~~1 3/4"~~
End Bent No 1	7 9/16"	6 7/8"	6 3/16"	5 1/2"	4 13/16"	4 1/8"	3 7/16"
End Bent No 2	7 9/16"	6 7/8"	6 3/16"	5 1/2"	4 13/16"	4 1/8"	3 7/16"

DESIGNED HIE C'K'D DGP
DRAWN JEE C'K'D DGP
TRACED ____ C'K'D ____

SF-22317

REVISED 8-23-91 : NOTCH AND BLOCKOUT DIMENSIONS & DETAILS
REVISED 1-4-91 : DIMENSION "D"

EXPANSION JOINT DETAILS

INDIANA DEPARTMENT OF ~~HIGHWAYS~~ TRANSPORTATION
VIGO COUNTY

SCALE:- As Noted DATE:- 19

DRAWING:- S37 OF 37 SHEET:- 62 OF 92
PROJECT:- M-T610(1)
BRIDGE CONTRACT NO. B-18969
BRIDGE FILE:- 90-84-7279

HENRY C. RHEE REGISTERED No. 13992 INDIANA PROFESSIONAL ENGINEER

TP101

STRUCTURE QUANTITIES

ITEM	CONCRETE CLASS C SUPERSTR CU. YDS.	CLASS A SUBSTR CU. YDS.	CLASS B ABOVE FTG. CU. YDS.	CLASS B IN FTG. CU. YDS.	CONC. PVMT REINF. 10 INCH	CONC. PVMT REINF. 10 INCH SYS.	CONCRETE RAILING CLASS C CU. YDS.	CONCRETE RAILING CLASS C LIN. FT.	REINF. STEEL TOTAL LBS.	STRUCT. STEEL *** LBS.	EPOXY COATED REINF. STEEL LBS.	ANCHOR BOLTS AR-22 EACH
WESTBOUND STRUCTURE												
END BENT N°1	9.3	83.6									8,870	
PIER N°2		33.8	31.1	68.9					20,531			
PIER N°3		38.6	94.3	68.9					36,900			
PIER N°4		38.5	95.2	68.9					37,102			
PIER N°5		38.6	96.4	68.9					37,188			
PIER N°6		38.6	97.5	68.9					37,296			
PIER N°7		38.6	98.5	68.9					37,519			
END BENT N°8	8.2	83.0									8,872	
SUPERSTRUCTURE	1201.9									1,105,098	~~266,378~~ 385,642	16 ~~32~~
EASTBOUND STRUCTURE	8.8											
END BENT N°1		82.8									8,872	
PIER N°2		33.7	31.4	68.9					20,552			
PIER N°3		38.6	94.3	68.9					36,900			
PIER N°4		38.5	95.2	68.9					37,102			
PIER N°5		38.6	96.4	68.9					37,188			
PIER N°6		38.6	97.5	68.9					37,296			
PIER N°7		38.6	98.5	68.9					37,519			
END BENT N°8	8.4	81.7									8,772	
SUPERSTRUCTURE	1201.9									1,105,027	~~266,405~~ 385,670	16 ~~32~~
WBL BRIDGE RAILING							189.4				24,371	
WBL SUBTOTAL	1,219.4	393.3	513.0	413.4					206,536		~~308,491~~ 427,755	
EBL BRIDGE RAILING							189.4				24,371	
EBL SUBTOTAL	1,219.1	391.1	513.3	413.4					206,557		~~308,420~~ 427,685	
Reinf. Steel for Approach Structures												
R.C. Bridge Approaches												
Reinf. Steel for Lip Gutter, Pvmt., Tapers, etc.												
TOTALS	~~2,438.5~~ 2464.7	~~784.4~~ 788.4	~~1,026.3~~ 971.2	826.8			378.8		~~413,093~~ 393,303	2,210,125	~~616,911~~ ~~855,440~~ 824,563	32 ~~64~~

ITEM	PILES EPOXY COATED SHELLS NO.	EPOXY COATED SHELLS LIN. FT.	TREATED TIMBER NO.	TREATED TIMBER LIN. FT.	STEEL ENCASED CONC. NO.	STEEL ENCASED CONC. LIN. FT.	STEEL H BEARING NO.	STEEL H BEARING LIN. FT.	CAST IRON DRAIN PIPE LBS.	CAST IRON, GRATES, BASINS, & FITTINGS LBS.
WESTBOUND STRUCTURE										
END BENT N°1						2065.9	20	~~868~~		
PIER N°2						2724.4	32	692		
PIER N°3						2112.0	32	~~512~~		
PIER N°4						2076.3	32	~~512~~		
PIER N°5						2058.4	32	~~512~~		
PIER N°6						2085.2	32	~~512~~		
PIER N°7						1995.8	32	~~512~~		
END BENT N°8						2128.4	20	~~942~~		
SUPERSTRUCTURE									20,174	13,248
EASTBOUND STRUCTURE										
END BENT N°1						2065.3	20	~~828~~		
PIER N°2						2767.7	32	692		
PIER N°3						2129.5	32	~~512~~		
PIER N°4						2062.4	32	~~512~~		
PIER N°5						2064.5	32	~~512~~		
PIER N°6						2036.2	32	~~512~~		
PIER N°7						2006.8	32	352		
END BENT N°8						2075.4	20	922		
SUPERSTRUCTURE									20,467	13,440
WBL BRIDGE RAILING						17246.4				
WBL SUBTOTAL							232	~~5,062~~	20,174	13,248
EBL BRIDGE RAILING						17207.8				
EBL SUBTOTAL							232	~~4,842~~	~~20,467~~	13,440
Reinf. Steel for Approach Structures										
R.C. Bridge Approaches										
Reinf. Steel for Lip Gutter, Pvmt., Tapers, etc.										
TOTALS						34454.2	464	~~9,904~~	~~40,641~~ 13205	26,688

ITEM	RAILING TYPE OR LIN. FT.	EXP JOINT TYPE LIN. FT.	EXP JOINT CLASS LIN. FT.	CONC. STR. MEMBERS BOX BEAMS TYPE SQ. FT.	CONC. STR. MEMBERS I BEAM TYPE LIN. FT.	MODULAR EXPANSION JOINT LIN. FT.	1" Dia. x 15" Long SWEDGED ANCHOR BOLTS /PLATE WASH'S. & HEXNUTS	BRIDGE DECK SURFACE SQ. YDS	MASONRY COATING SQ. FT.	SURFACE SEAL SQ. FT.	FINISHING AND CURING SQ. YD.	BLASTING AND CLEANING SQ. YD.	S.I. BRG. ASS'Y. TYPE I	S.I. BRG. ASS'Y. TYPE II
WESTBOUND STRUCTURE														
END BENT N°1							20			600			5	
PIER N°2							20			200				5
PIER N°3							20			200				5
PIER N°4							20			200				5
PIER N°5							20			200				5
PIER N°6							20			200				5
PIER N°7							20			200				5
END BENT N°8							20			600			5	
SUPERSTRUCTURE						~~85~~ 84			*7400	54000				
EASTBOUND STRUCTURE														
END BENT N°1							20			600			5	
PIER N°2							20			200				5
PIER N°3							20			200				5
PIER N°4							20			200				5
PIER N°5							20			200				5
PIER N°6							20			200				5
PIER N°7							20			200				5
END BENT N°8							20			600			5	
SUPERSTRUCTURE						~~85~~ 84			*7400	54000				
WBL BRIDGE RAILING														
WBL SUBTOTAL						~~85~~ 84	160		* 7,400	56,400			10	30
EBL BRIDGE RAILING														
EBL SUBTOTAL						~~85~~ 84	160		*7,400	56,400			10	30
Reinf. Steel for Approach Structures														
R.C. Bridge Approaches														
Reinf. Steel for Lip Gutter, Pvmt., Tapers, etc.														
TOTALS						~~170~~ 166	320		*14,800	112,800 *			20	60

APPROACH STRUCTURES

STRUCT. NO.	LOCATION	DESCRIPTION SIZE	DESCRIPTION KIND	LENGTH LIN. FT.	CONCR. CL. A IN STRS. CU. YDS.	REINF. STEEL LBS.	PIPE END SEC. EACH		REMARKS
1	Sta. 60+13 Line PR-2	6"	FBC PERF CS	80					INCLUDES 90° BEND
2	Sta. 60+13 Line PR-1	6"	FBC PERF CS	80					INCLUDES 90° BEND
3	Sta. 69+03 Line PR-2	6"	FBC PERF CS	80					INCLUDES 90° BEND
4	Sta. 69+03 Line PR-1	6"	FBC PERF CS	75					INCLUDES 90° BEND
				TOTALS					Total of Reinforcing Steel Carried to "Structure Quantities"

PAVED SIDE DITCH

LT. OR RT.	STATION TO STATION	PAVED SIDE DITCH TYPE	PAY LENGTH	NO. OF LUGS	PAY LENGTH

APPROACH TABLE

LOCATION LT/RT	LOCATION STATION	DESCRIPTION	WIDTH FT.	RADII FT.	GRADE %	LENGTH FT.	DIST. BEYOND R/W FT.	EXCAVATION(CYS) CUT	EXCAVATION(CYS) FILL	BITUM. SURFACE #/SQ.YD.	BITUM. SURFACE TONS	BITUM. BINDER #/SQ.YD.	BITUM. BINDER TONS	BITUM. BASE #/SQ.YD.	BITUM. BASE TONS	COMP. AGG. BASE Depth (In)	COMP. AGG. BASE TONS

State Form 3952R
FORM IC 642
REV. 1/85

B-18969
BRM-M-T610 (1)
40-84-7279

EWA'S

INDIANA DEPARTMENT OF HIGHWAYS
CONSTRUCTION RECORD
COMPARISON OF ESTIMATES – ORIGINAL AND FINAL

CONTR. NO. B-
PROJ. NO. BRM-M

CONTRACT ITEMS	UNIT PRICE	ORIGINAL ESTIMATE QUANTITY	ORIGINAL ESTIMATE AMOUNT	FINAL ESTIMATE QUANTITY	FINAL ESTIMATE AMOUNT	OVERRUNS QUANTITY	OVERRUNS AMOUNT	UNDERRUNS QUANTITY	UNDERRUNS AMOUNT
46 E.W.A. Dated 2-18-92	324.50	0	0.00	8	2596.00	8	2596.00		
400 W HPS Luminaire									
47 E.W.A. Dated 2-18-92	0.39	0	0.00	736	287.04	736	287.04		
1/c-#10 Cu. STD. 600V									
48 E.W.A. Dated 2-18-92	30.80	0	0.00	8	246.40	8	246.40		
Fused Connector									
49 E.W.A. Dated 2-18-92	30.80	0	0.00	8	246.40	8	246.40		
UnFused Connector									
50 E.W.A. Dated 2-18-92	19.80	0	0.00	14	277.20	14	277.20		
MuL. Comp. FTgs.									
51 E.W.A Dated 2-18-92	30.80	0	0.00	10	308.00	10	308.00		
Insulating Link W P									
52 E.W.A. Dated 2-18-92	572.00	0	0.00	4	2288.00	4	2288.00		
Handhole									
53 E.W.A. Dated 2-18-92	1.32	0	0.00	4640	6124.80	4640	6124.80		
1/c-4 Cu. Std. 600V in Conduit									
54 E.W.A. Dated 2-18-92	39.60	0	0.00	0	0.00				
Sign Underpass and Roadway I. D.									
55 Furnish and Deliver 237 Anchor	L SUM	0	0.00	1	1017.48	1	1017.48		
Bolts (15") E.W.A. Dated 4-13-92									

PROJECT ENGINEER/SUPERVISOR CERTIFICATION:
I do hereby certify that the final pay quantities shown above are true and correct for the items of work completed on this contract.
SIGNATURE DATE

FIELD CHECKED BY:
SIGNATURE DATE

DISTRICT REVIEW OFFICER
I have examined the supporting documentation and checked the final pay quantities shown and recommend payment thereof.
SIGNATURE DATE

CENTRAL O
SIGNATURE

REVISIONS

DATE	ITEM
6/19/91	Revised Quantities of Anchor bolts
8/23/91	Epoxy Coated Reinf. Steel

Note changes

NOTES:
Weight of Spirals includes weight of 1½ extra turns top and bottom.
Spacers and 1½ turns at laps included in cost of Spiral.
*** The weight of structural steel is approximate only, and it shall be the Contractor's responsibility to determine the weight on which he bases his bid.
For Test Bar Samples See Bridge Standard C1.

JUNE 1984

SUMMARIZED JEE C'K'D JG
TRACED MAC C'K'D JG

SF-22332

BRIDGE SUMMARY

INDIANA DEPARTMENT OF ~~HIGHWAYS~~ TRANSPORTATION

DATE

SHEET 63 OF 92

HENRY C. RHEE REGISTERED No. 13692 PRO...

PROJECT: ~~ST T610(1)~~ M-T610(1)
CONTRACT NO: B-18969
BRIDGE FILE: 40-84-7279

TP103